US006364837B1

(12) **United States Patent**
Mazess et al.

(10) **Patent No.: US 6,364,837 B1**
(45) **Date of Patent: *Apr. 2, 2002**

(54) **CONTACT DIGITAL ULTRASONIC DENSITOMETER**

(75) Inventors: **Richard B. Mazess**, Madison; **Scott A. Wiener**, Mount Horeb; **Richard F. Morris**, Stoughton, all of WI (US)

(73) Assignee: **Lunar Corporation**, Madison, WI (US)

(*) Notice: Subject to any disclaimer, the term of this patent is extended or adjusted under 35 U.S.C. 154(b) by 0 days.

This patent is subject to a terminal disclaimer.

(21) Appl. No.: **09/561,125**

(22) Filed: **Apr. 28, 2000**

Related U.S. Application Data

(63) Continuation of application No. 09/277,481, filed on Mar. 26, 1999, which is a continuation-in-part of application No. 09/094,073, filed on Jun. 9, 1998, now Pat. No. 6,027,449, which is a continuation-in-part of application No. 08/795,025, filed on Feb. 19, 1997, now Pat. No. 5,840,029, which is a continuation-in-part of application No. 08/466,495, filed on Jun. 6, 1995, now Pat. No. 5,603,325, which is a continuation-in-part of application No. 08/397,027, filed on Mar. 1, 1995, now Pat. No. 5,483,965, which is a continuation of application No. 08/072,799, filed on Jun. 4, 1993, now abandoned, which is a continuation-in-part of application No. 07/895,494, filed on Jun. 8, 1992, now Pat. No. 5,343,863, which is a continuation-in-part of application No. 07/772,982, filed on Oct. 7, 1991, now Pat. No. 5,119,820, which is a continuation of application No. 07/343,170, filed on Apr. 25, 1989, now Pat. No. 5,054,490, which is a continuation-in-part of application No. 07/193,295, filed on May 11, 1988, now Pat. No. 4,930,511.

(60) Provisional application No. 60/080,158, filed on Mar. 31, 1998.

(51) **Int. Cl.**[7] **A61B 8/00**
(52) **U.S. Cl.** **600/449**
(58) **Field of Search** 600/437–438, 600/442, 449; 73/597, 599

(56) **References Cited**

U.S. PATENT DOCUMENTS

2,439,130	A	4/1948	Firestone	128/661.03
3,345,863	A	10/1967	Henry et al.	128/661.03
3,477,422	A	11/1969	Jurist, Jr. et al.	128/661.03
3,587,561	A	6/1971	Ziedonis	128/661.03
3,648,685	A	3/1972	Hepp et al.	128/665

(List continued on next page.)

FOREIGN PATENT DOCUMENTS

EP	034169	6/1981
EP	0045265 A	2/1982

(List continued on next page.)

OTHER PUBLICATIONS

C.M. Langton, S.B.Palmer, R.W. Porter, The Measurement of Broadband Ultrasonic Attenuation in Cancellous Bond, Eng. Med., vol. 13, pp. 89–91 (1984).

S. Lees, Sonic Properties of Mineralized Tissue, Tissue Characterization With Ultrasound, CRC Publication 2, pp. 207–226 (1986).

(List continued on next page.)

Primary Examiner—Francis J. Jaworski
(74) *Attorney, Agent, or Firm*—Quarles & Brady LLP

(57) **ABSTRACT**

An ultrasonic instrument employs a digital architecture to provide improved stability to sound speed measurements of human bone in vivo. A digitization of the received ultrasonic signal allows numerical analyses to be applied in determining precise arrival time of the waveform. The microprocessor may initiate the ultrasonic signal transmission and detect its arrival and may control the strength of the transmitted signal and the amplification of the received signal to optimize the signal path.

32 Claims, 6 Drawing Sheets

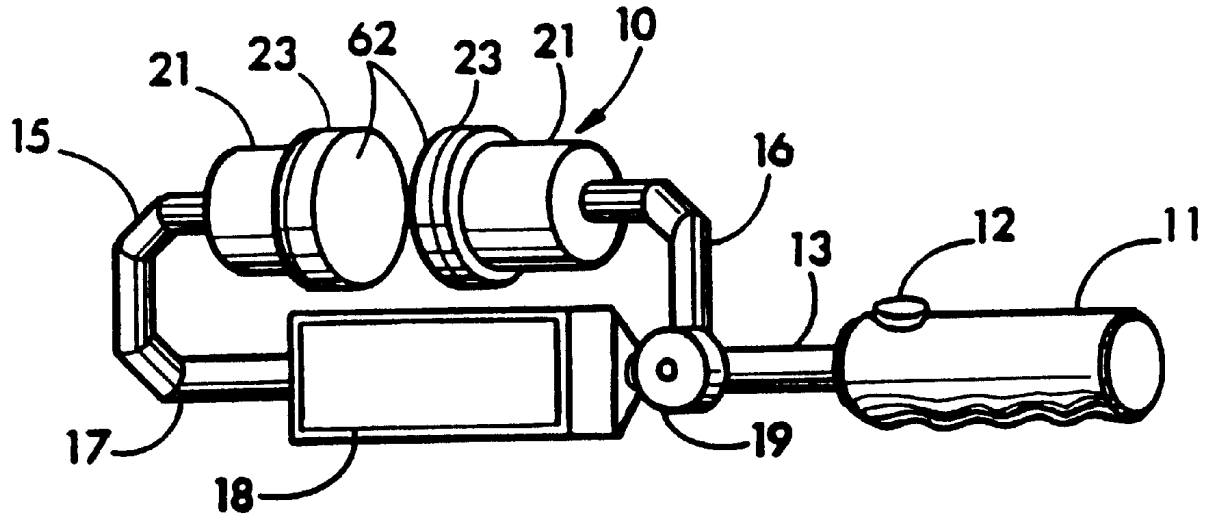

U.S. PATENT DOCUMENTS

3,664,180	A		5/1972	McDonald et al. 73/598
3,713,329	A		1/1973	Munger 128/661.05
3,782,177	A		1/1974	Hoop 73/643
3,847,141	A		11/1974	Hoop 128/660.01
4,033,178	A		7/1977	Holt et al.
4,048,986	A		9/1977	Ott 128/653.1
4,056,970	A		11/1977	Sollish 73/629
4,059,098	A		11/1977	Murdock
4,094,306	A		6/1978	Kossoff ..... 128/2 V
4,105,018	A		8/1978	Greenleaf et al. 73/597
4,138,999	A		2/1979	Eckhart et al. 128/661.03
4,217,912	A		8/1980	Hubmann et al. 128/774
4,233,845	A		11/1980	Pratt, Jr. 73/865.4
4,235,243	A		11/1980	Saha 128/740
4,237,901	A		12/1980	Taenzer 128/660
4,250,895	A		2/1981	Lees 178/776
4,282,880	A		8/1981	Gardineer et al.
4,316,183	A		2/1982	Palmer et al. 340/621
4,361,154	A		11/1982	Pratt, Jr. 128/660.01
4,421,119	A		12/1983	Pratt, Jr. 128/661.01
4,437,468	A		3/1984	Sorenson et al. 128/660
4,476,873	A		10/1984	Sorenson et al. 128/661.01
4,483,343	A		11/1984	Beyer et al. 128/660
4,517,840	A		5/1985	Thompson et al. 73/664
4,517,895	A		5/1985	Teslawski et al.
4,522,068	A		6/1985	Smith ..... 73/32 A
4,530,360	A		7/1985	Duarte 128/419
4,594,895	A		6/1986	Fujii 73/599
4,597,292	A		7/1986	Fujii et al. 73/599
4,669,482	A		6/1987	Ophir 128/661.03
4,681,120	A		7/1987	Kunii
4,700,571	A		10/1987	Okasaki 73/597
4,774,959	A		10/1988	Palmer 128/660.06
4,855,911	A		8/1989	Lele et al. 364/413.25
4,907,252	A		3/1990	Aichinger 378/99
4,913,157	A		4/1990	Pratt et al. 128/661.03
4,926,870	A		5/1990	Brandenburger
4,930,511	A	*	6/1990	Rossman et al. 600/437
4,976,267	A		12/1990	Jeffcott et al.
5,014,970	A		5/1991	Osipov 269/328
5,042,489	A		8/1991	Wiener 128/661.03
5,054,490	A		10/1991	Rossman+ et al. 128/661.03
5,095,907	A		3/1992	Kudo et al. 128/660
5,119,820	A	*	6/1992	Rossman et al. 600/437
5,134,999	A		8/1992	Osipov 128/661.03
5,143,069	A		9/1992	Kwon et al. 128/660.01
5,143,072	A		9/1992	Kantorovich et al.
5,156,629	A		10/1992	Shane et al.
5,218,963	A		6/1993	Mazess 128/661.03
5,259,384	A		11/1993	Kaufman et al. 128/660.06
5,335,661	A		8/1994	Koblanski 128/661.03
5,348,009	A		9/1994	Ohtomo et al. 128/661.03
5,349,959	A		9/1994	Wiener et al. 128/661.03
5,443,069	A		8/1995	Schaetzle
5,452,722	A		9/1995	Langton 128/661.03
5,483,965	A	*	1/1996	Wiener et al. 600/449
5,494,038	A		2/1996	Wang et al.
5,509,420	A		4/1996	Ohtomo et al.
5,535,750	A		7/1996	Matsui et al.
5,603,325	A		2/1997	Mazess et al. 128/661.06
5,615,681	A		4/1997	Ohtomo 128/661
5,651,363	A		7/1997	Kaufman et al.
5,655,539	A		8/1997	Wang et al.
5,770,801	A		6/1998	Wang et al. 73/644
5,772,596	A		6/1998	Forfitt et al.
5,817,018	A		10/1998	Ohtomo 600/437
5,840,029	A	*	11/1998	Mazess et al. 600/437

FOREIGN PATENT DOCUMENTS

EP	0585492 A1	3/1994
EP	0786232 A2	7/1997
FR	2318420	2/1977
GB	2 309 083	2/1998
SU	123748	2/1959
SU	219853	6/1968
WO	WO 87/07494	5/1987
WO	WO 95/26160	10/1995
WO	WO 96/03080	2/1996
WO	WO96/39080	12/1996

OTHER PUBLICATIONS

J. D. Craven, M. A. Constantini, M. A. Greenfield, R. Stern, *Measurement of the Velocity of Ultrasound in Human Cortical Bone and its Potential Clinical Importance*, Investigate Radiology, vol. 8, pp. 72–77 (1973).

C.Rich, E.Klink, R.Smith, B.Graham, P. Ivanovich, Sonic Measurement of Bone Mass, Progress in Development of Methods in Bond Densitometry, pp.1 37–146, (NASA 1966).

M.Greenspan, E.E.Tschiegg, Sing–Around Ultrasonic Velocimeter for Liquids, The Review of Scientific Instruments, vol. 28, No. 11, pp. 897–901 (1957).

W.Abendschein and G.W. Hyatt, Ultrasonics and Selected Physical Properties of Bone, Clincal Orthopedics and Related Research, No. 69, pp. 294–301 (1970).

M.Gerlanc, D.Haddad, G.Hyatte, J.Langloh, P.St.Hilaire, Ultrasonic Study of Normal and Fractured Bone, Clinical Orthopedics and Related Research, pp. 175–180, (1975).

B. Martin, R.R.Haynes, The Relationship Between the Speed of Sound and Stiffness of Bone, Biomechanics Laboratories, West Virginia University (1970).

J.M.Hoop, W.N.Clotfelter, Ultrasonic Bone Density Measurements, Marshall Space Flight Center, The Fall Conference of the American Society for Nondestructive Testing (1970).

K.H.Okumura, Preventative Diagnosis of Breakdown, Massachusetts Institute of Technology (1978).

W.N.McDicken, *The Physics of Ultrasound in Diagnostic Ultrasonics,* pp. 35–61 (1976).

S.Lees, C. Davidson, The Role of Collagen in the Elastic Processes of Calcified Tissues, C. Journal of Biomechanics, vol. 10 No. 7 (1977) pp. 473–486.

PCT Search Report in PCT/US99/96739, dated Jun. 22, 1999.

G.Van Venrooij, Measurement of Ultrasound Velocity in Human Tissue, Ultrasonics, Oct. (1971), pp.24 –242.

S.Lang, Ultrasonic Method for Measuring Elastic Coefficients of Bone and Results on Fresh and Dried Bovine Bones, IEE Transactions on Bio–Medical and Engineering, vol. BME–17, No.2 (Apr. 1970), pp. 101–105.

B. Martin, R. Haynes, The Investigation of Bone's Substructure Using Megahertz Sound and a Porous Model, ASME Publication (Dec. 3, 1970).

C.M. Langton, Doctoral Thesis entitled The Measurement of Broadband Ultrasonic Attenuation of Cancellous Bone, Jul. 1984.

S.A.Brown, M.B.Mayor, Ultrasonic Prediction of Delayed or Nonunion of Fractures, Proceedings of the Fifth New England Bioengineering Conference, (Apr. 15,1997), pp. 229–233.

S.A. Brown, M.B. Mayor, Ultrasonic Assessment of Early Callus Formation, Biomedical Engineering, vol. 11, No. 4 (Apr. 1976), pp. 124–128.

H.Yamada, *Strength of Biological Materials,* pp. 53–57, (1970).

P.N.T.Wells, *Physical Principles of Ultrasonic Diagnosis,* Academic Press, London (1969), pp. 1–27.

B.S.Mather, Comparison of Two Formulae in Vivo Prediction of Strength of the Femur, Aeorspace Medicine, vol. 38, No. 12 (Dec. 1967), pp. 1270–1272.

P.J.Rossman, Measurements of Ultrasonic Velocity and Attenuation in the Human Os Calcis and Their Relationship Photon Absorptiometry Bone Mineral Measurements, Master's Thesis, University of Wisconsin–Madison, 1987.

C.M. Langton, et al., A Contact Method for the Assessment of Ultrasonic Velocity and Broadband Attenuation in Cortical and Cencellous Bone, Clin. Phys. Physiol. Meas., 1990 vol. 11, No. 3, 243–249, Printed in UK.

J.Lawrence Katz, et al., The Structure and Anisotropic Mechanical Properties of Bone, IEEE Transactions on Biomedical Engineering BME–31 (1984) Dec., No. 12, New York, USA.

Robert E. Holm, et al., Use Discrete Fourier Transforms to Simplify Signal Processing, EDN (Apr. 1983).

V.Poll et al., Broadband Ultrasonic Attenuation in the os calcis and Single Photon Absorptiometry in the Distal Forearm: a Comparative Study, Clin. Phys. Physiol. Meas. 1986, vol. 7, No. 4, 375–379, Printed in Great Britain.

Shailendra S. Shukla et al., A Study of the Homogeneity of the Trabecular Bone Mineral Density, Med. Phys. 14(4) Jul./Aug. 1987.

George T. Anast, et al., Ultrasonic Technique for the Evaluation of Bone Fractures, Biol., Eng. Soc. vol. 11, No. 4, Apr. 176.

Osteosonics, Doncaster, England, Brochure for Ultrasonic Bone Analyser, *The New Approach to Bone Diagnosis,* (undated).

G.Kossoff, E.Fry, J.Jellins, Average Velocity of Ultrasound in the Human Female Breast, The Journal of the Acoustical Society of America, vol. 53, No. 6, 1973, pp. 1730–1736.

P.N.T.Wells, Velocity, Absorption and Attenuation of Biological Materials, Biomedical Ultrasonics, Academia Press. N.Y. 1977, pp. 110–123, 134–135.

R. Strelitzki and J.A. Evans, Diffraction and Interface Losses in Broadband Ultrasound Attenuation Measurements of the Calcaneum, Physiol, Meas. 19 (1998), pp. 197–204.

* cited by examiner

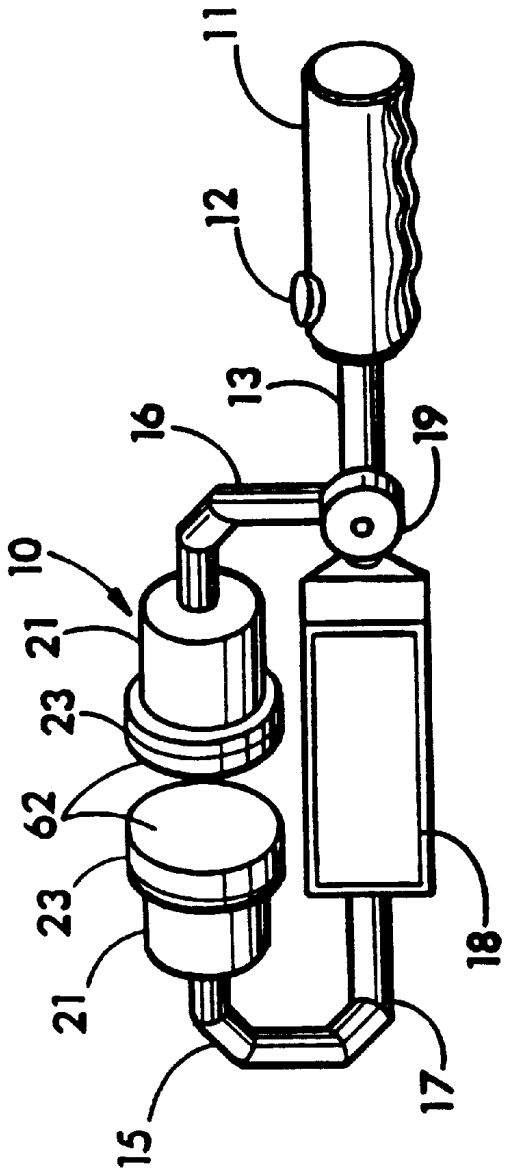

FIG. 1

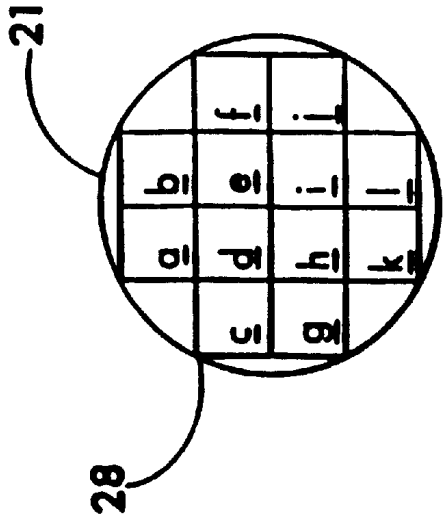

FIG. 3

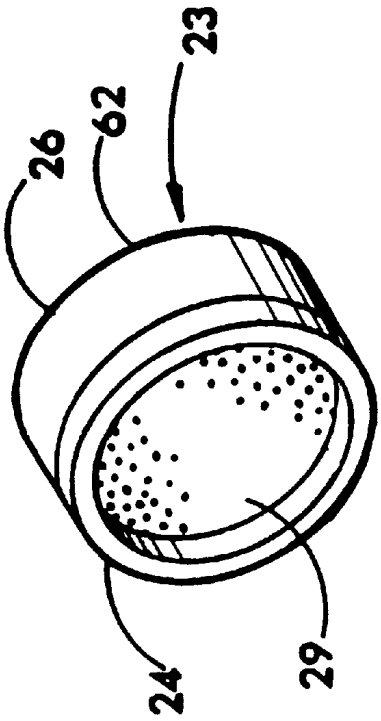

FIG. 2

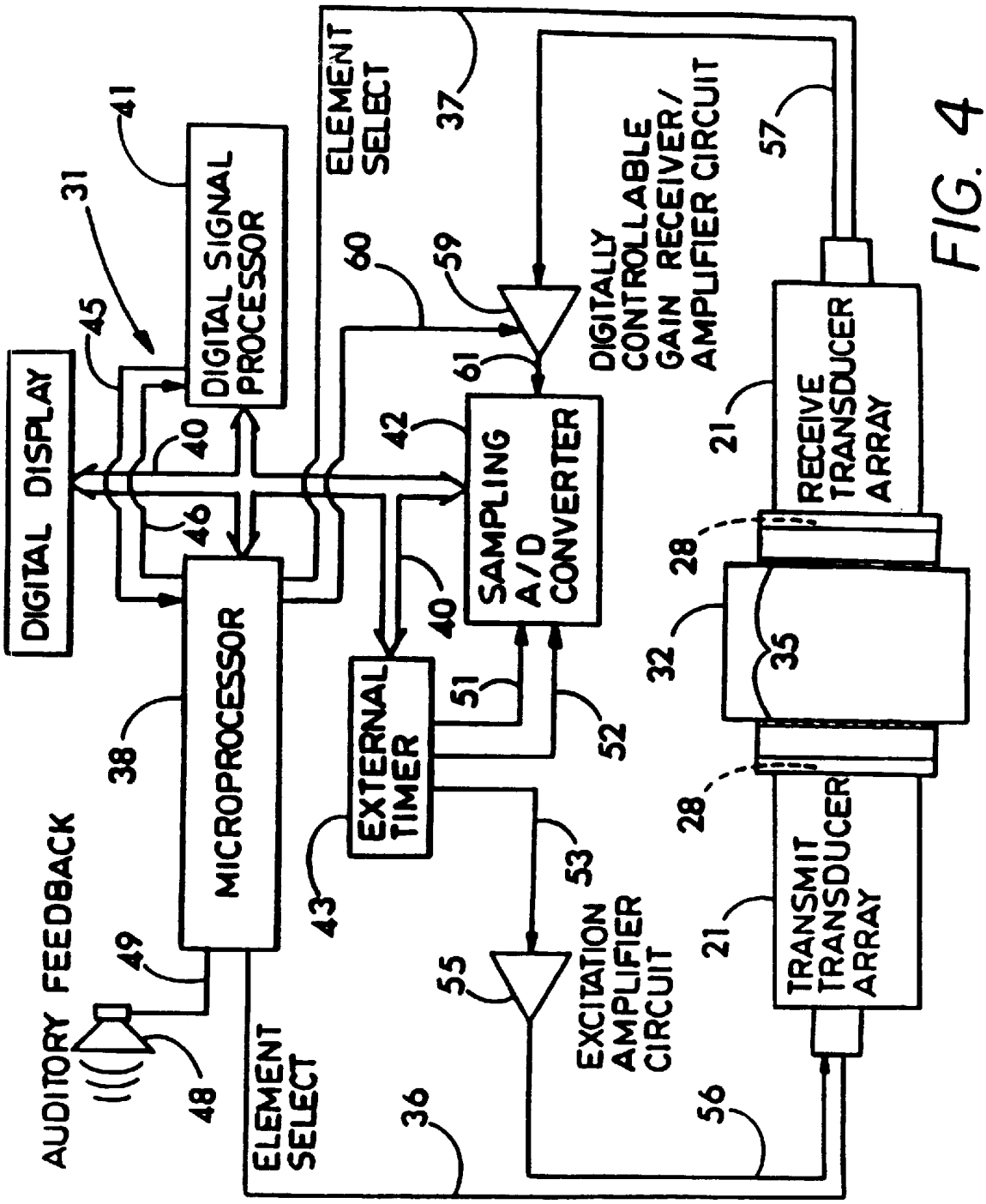
DIGITAL DISPLAY
DIGITAL SIGNAL PROCESSOR
MICROPROCESSOR
AUDITORY FEEDBACK
ELEMENT SELECT
ELEMENT SELECT
SAMPLING A/D CONVERTER
EXTERNAL TIMER
DIGITALLY CONTROLLABLE GAIN RECEIVER/ AMPLIFIER CIRCUIT
EXCITATION AMPLIFIER CIRCUIT
RECEIVE TRANSDUCER ARRAY
TRANSMIT TRANSDUCER ARRAY
31
41
45
40
46
38
49
48
37
60
59
61
42
40
51
52
43
53
55
36
56
57
21
28
32
35
28
21

FIG. 4

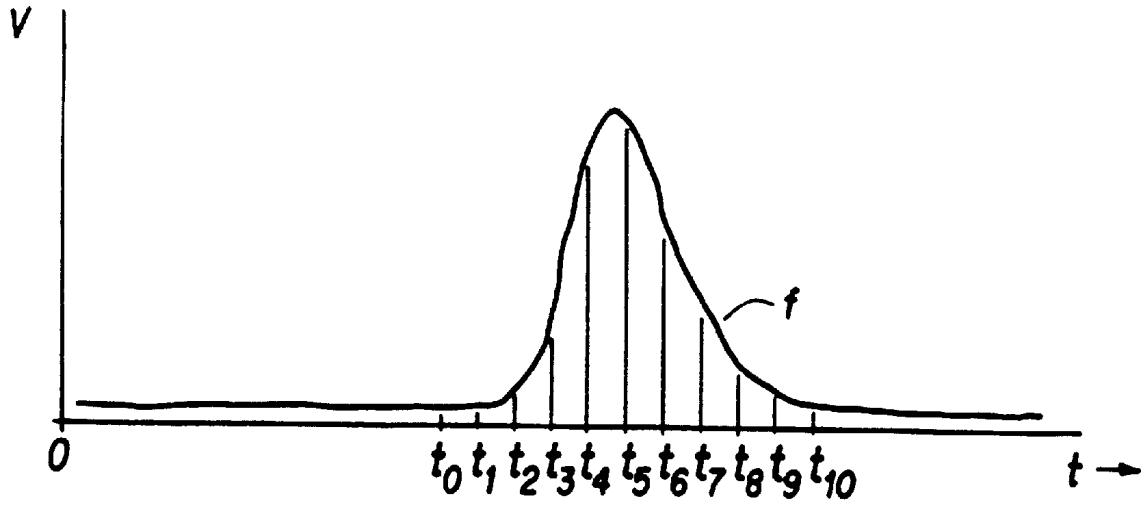

FIG. 5

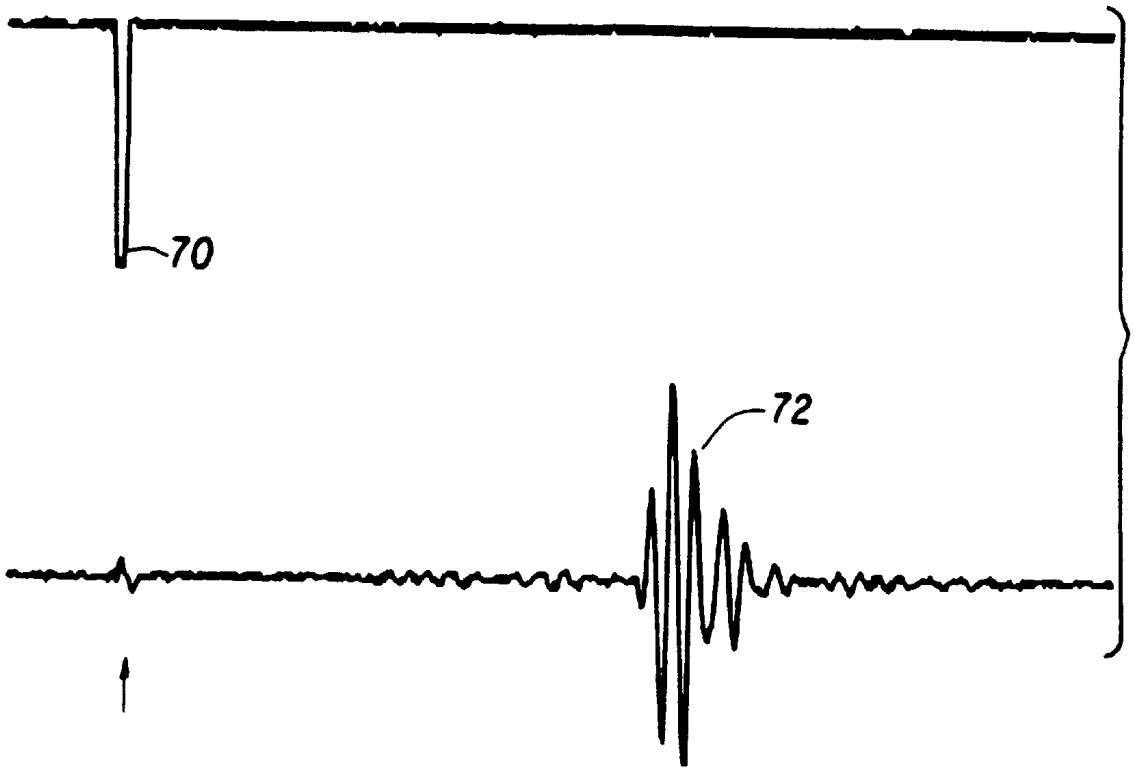

FIG. 7

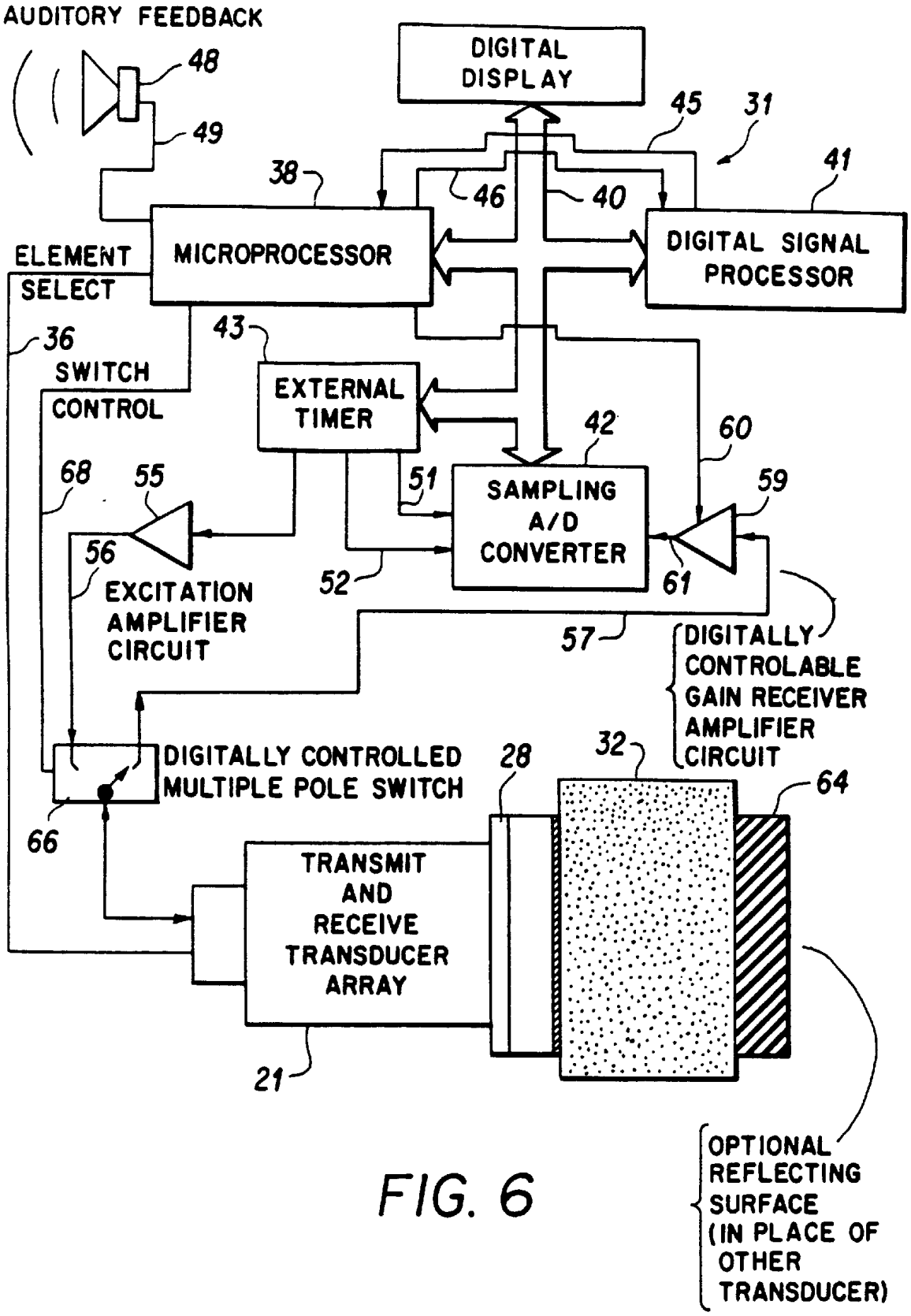
AUDITORY FEEDBACK
48
49
DIGITAL DISPLAY
45
31
41
38
46
40
ELEMENT SELECT
MICROPROCESSOR
DIGITAL SIGNAL PROCESSOR
36
SWITCH CONTROL
43
EXTERNAL TIMER
42
60
68
55
51
SAMPLING A/D CONVERTER
59
56
52
61
EXCITATION AMPLIFIER CIRCUIT
57
DIGITALLY CONTROLABLE GAIN RECEIVER AMPLIFIER CIRCUIT
DIGITALLY CONTROLLED MULTIPLE POLE SWITCH
28
32
64
66
TRANSMIT AND RECEIVE TRANSDUCER ARRAY
21
OPTIONAL REFLECTING SURFACE (IN PLACE OF OTHER TRANSDUCER)

FIG. 6

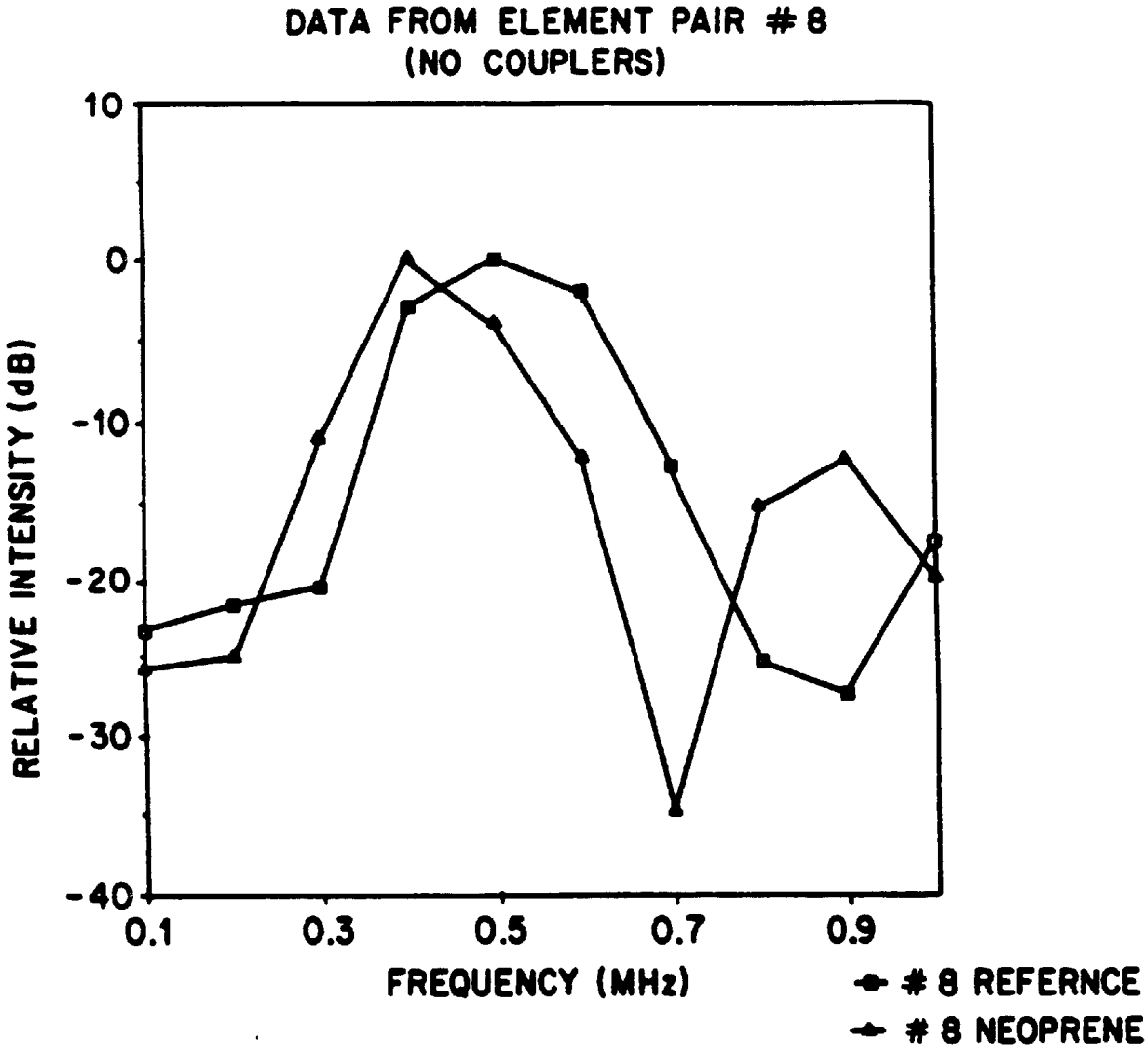
DATA FROM ELEMENT PAIR # 8
(NO COUPLERS)
RELATIVE INTENSITY (dB)
10
0
-10
-20
-30
-40
0.1
0.3
0.5
0.7
0.9
FREQUENCY (MHz)
8 REFERNCE
8 NEOPRENE

FIG. 8

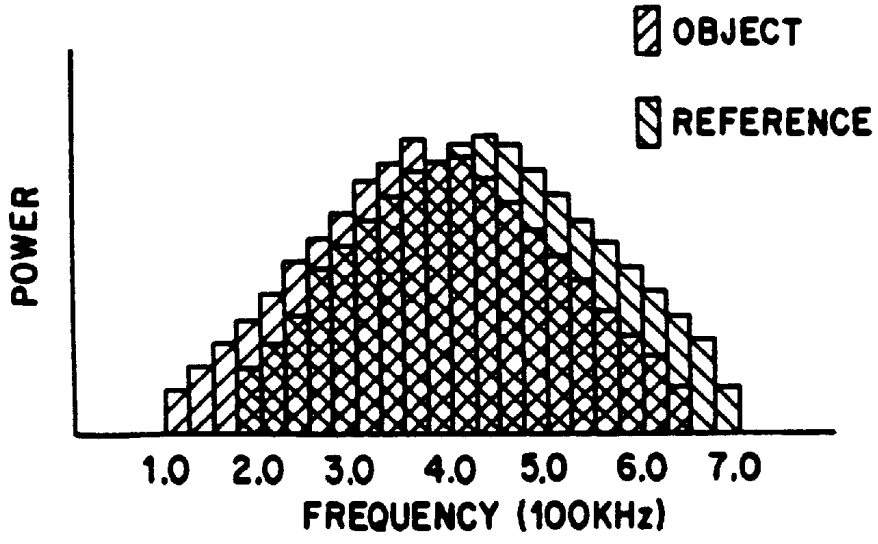
OBJECT
REFERENCE
POWER
1.0
2.0
3.0
4.0
5.0
6.0
7.0
FREQUENCY (100KHz)

FIG. 9

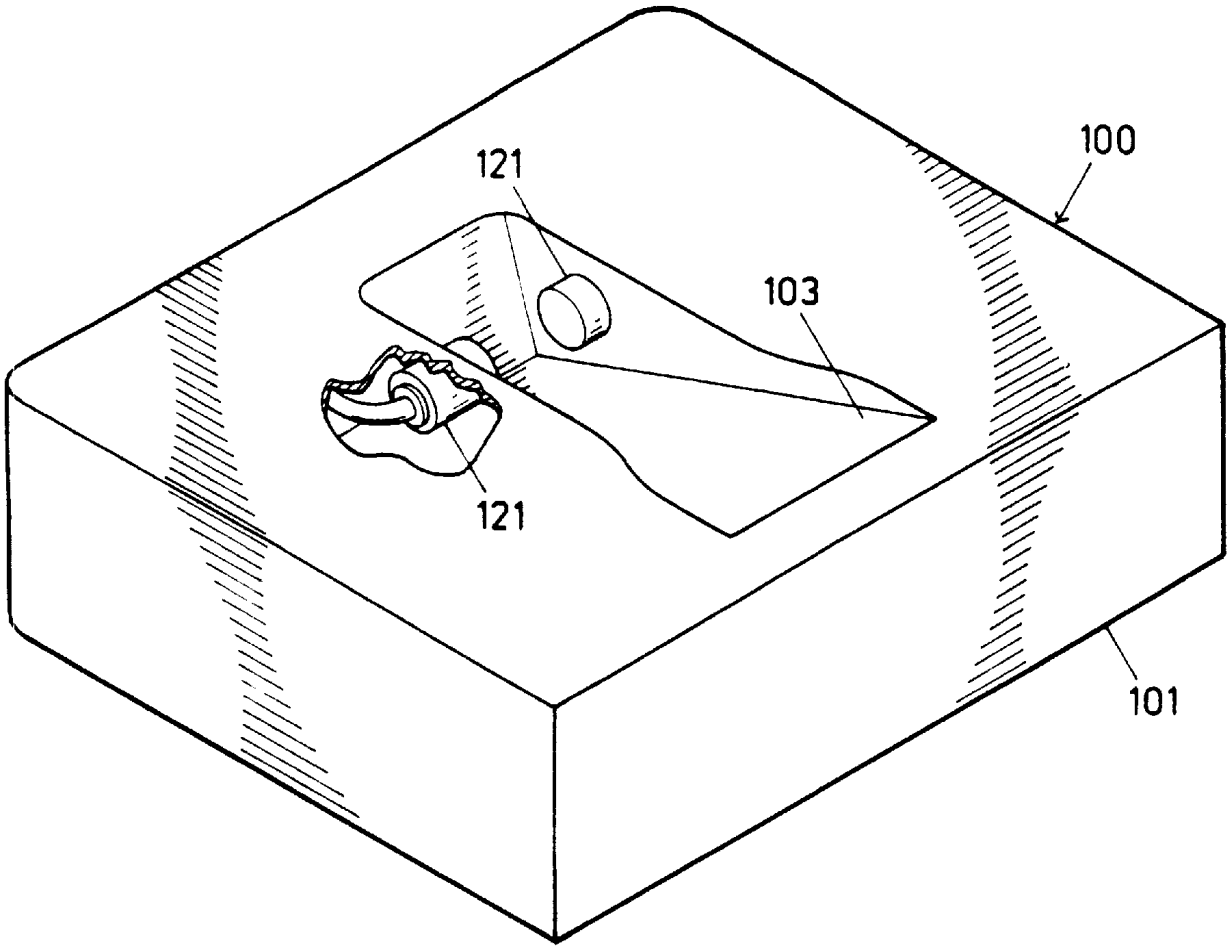

FIG. 10

CONTACT DIGITAL ULTRASONIC DENSITOMETER

CROSS-REFERENCE TO RELATED APPLICATIONS

This application is a continuation of Ser. No. 09/277,481; filed Mar. 26, 1999 and which claims benefit of Ser. No. 60/080,158 filed Mar. 31 1998, and which is a CIP of Ser. No. 09/094,073 Jun. 9, 1998; U.S. Pat. No. 6,027,449 which is a CIP of Ser. No. 08/795,025 Feb. 4, 1997 U.S. Pat. No. 5,840,029; Nov. 24, 1998 which is a CIP of Ser. No. 08/466,495 Jun. 6, 1995 U.S. Pat. No. 5,603,325; Feb. 18, 1997 which is a CIP of Ser. No. 08/397,027 Mar. 1, 1995 U.S. Pat. No. 5,483,965; Jan. 16, 1996 which is a CIP of Ser. No. 08/072,799 Jun. 4, 1993 Abandoned; which is a CIP of Ser. No. 07/895,494 Jun. 8, 1992 U.S. Pat. No. 5,343,863; Sep. 6, 1994 which is a CIP of Ser. No. 07/772,982 Oct. 7, 1991 U.S. Pat. No. 5,119,820; Jun. 9, 1992 which is a CIP of Ser. No. 07/343,170 Apr. 25, 1989 U.S. Pat. No. 5,054, 490; Oct. 8, 1991 which is a CIP of Ser. No. 07/193,295 May 11, 1988 U.S. Pat. No. 4,930,511; Jun. 5, 1990

BACKGROUND OF THE INVENTION

1. Field of the Invention

The present invention relates to devices which are used for measuring the density of members, such as bones, and more particularly to devices which utilize ultrasonic acoustic signals to measure the physical properties and integrity of the members.

2. Description of the Prior Art

The present invention relates to bone measuring instruments and in particular to instruments employing ultrasonic pulses to make measurements of the integrity of human bones in vivo.

Osteoporosis or loss of bone mineralization and its cure or prevention are important areas of medical and biological interest. Of particular concern is the loss of trabecular bone, a spongy bone structure forming the interior of vertebrae and other bones. The trabecular bone provides much of the strength of such bones and is disproportionately affected in times of bone mass loss. While it has long been known that the speed of sound through a material will reveal properties of that material, application of this principle for reliable clinically significant bone density measurement has not been easy.

An early measurement of sound speed through in vitro bone is described in: *Sonic Measurement of Bone Mass,* Clayton Rich et al., a paper delivered at a conference held in Washington, D.C. Mar. 25–27, 1965, NASA publication SP-64. A sinusoidal pulse was timed in its passage from a transmitting transducer through a water bath and excised bone to a receiving transducer. The author noted problems of providing sufficient signal strength in trabecular bone even with the use of an automatic gain control circuit.

Sound speed measurement of bone in vivo is described in U.S. Pat. No. 3,847,141 to Hoop issued Nov. 12, 1974. A pulse from a transmitting transducer was propagated through a finger to be received by a receiving transducer; however, the pulse was not timed directly. Rather after filtering, the pulse was used to "retrigger" the transmitting transducer to create a regular series of pulses whose frequency could be determined. This technique is known generally as "sing around".

A doctoral thesis by Langton entitled "The Measurement of Broadband Ultrasonic Attenuation in Cancellous Bone"

dated July 1984 describes the measurement of the speed of sound through the os calcis of the heel. The author, however, found that accurate measurement of sound speed was hampered by the difficulty of measuring the beginning of the pulse on an oscilloscope and suggested that the elapsed time between the transmission and reception of a pulse was too short for accurate and repeatable measurements. He proposed that the "sing around" approach of Hoop might be used to correct this latter problem. Langton, observing the considerable frequency distortion of the pulse after passage through the heel, elected to continue his investigation in the area of frequency dependant attenuation rather than sound speed.

BRIEF SUMMARY OF THE INVENTION

The present invention provides significantly improved accuracy in speed of sound measurements of bone in vivo. The present inventors have recognized that prior-art detection systems, using analog threshold detection techniques, were susceptible to timing variations caused by phase and amplitude distortion of the transmitted pulse. Even small variations in detection time of a pulse traveling across the narrow width of the human heel, for example, can produce unacceptable variations in sound speed determination.

The present invention reduces variation in detection time by the extensive application of digital control techniques across the entire signal chain. The received signal is digitized to be received by a microprocessor allowing flexible numerical analysis of pulse arrival time tailored to the particular device, frequency range, and region of investigation. Conversion of the received pulse into digital words for receipt by the microprocessor, together with initialization of the transmitted pulse by the microprocessor allows computer-stable timing of the transmission of the pulse. The microprocessor adjusts the transmitted pulse strength and the gain of the receiver amplifier to dynamically optimize signal strength. Digitization of the received pulse also allows a single captured pulse to be used for both the purpose of measuring velocity or time of flight of the ultrasonic signal and in analyzing its attenuation through mathematical techniques such as the fast Fourier transform.

In combination these techniques rendered possible clinically accurate speed of sound measurements of bone in vivo.

More specifically, the present invention provides an ultrasonic densitometer for measurement of the human os calcis in vivo including an ultrasonic signal generator producing a broad band electrical pulse of ultrasonic frequencies and a first ultrasonic transducer connected to the ultrasonic signal generator for producing a corresponding acoustic signal directed along a transmission axis.

A second ultrasonic transducer receives the acoustic signals directed along the transmission axis and relays them to an analog to digital converter converting the electrical signals to digital representations. A microprocessor communicating with the ultrasonic signal generator and the analog to digital converter executes a stored program to initiate the transmission of the acoustic pulse and to numerically analyze the digital representation of the received acoustic signal as distorted by the imposition of the human heel between the first and second ultrasonic transducers to measure a time of transmission of the ultrasonic pulse between the first and second transducers.

Thus it is one object of the invention to provide improved accuracy in the measurement of time of transmission through the use of numerical analysis which may accommodate for pulse distortion and noise.

It is another object of the invention to provide for the digital control by a single microprocessor in both initiation of the transmission of the acoustic pulse and its receipt and analysis such as provides more precise measurement.

The ultrasonic signal generator may be a digitally controllable amplifier designed to create a pulsed output.

Thus it is another object of the invention to provide control by the microprocessor of the output signal as well as the processing of the received signal.

The densitometer may include a digitally controllable automatic gain control circuit connected between the second ultrasonic transducer and the analog to digital converter to receive the electrical signal from this second ultrasonic transducer and receive a control signal from the microprocessor. The microprocessor operating according to its stored program may control the amplification of the electronic signal from the second ultrasonic transducer prior to its receipt by the digital to analog converter.

Thus it is another object of the invention to provide precise digital gain control as may be necessary to optimize the sensitivity of the receive transducer and the amplifier circuit to received acoustic signals.

It is yet another object of the invention to provide for a conversion of the received signal to a digital form without loss of resolution by controlling the gain to fully use the range of the A to D converter.

The microprocessor may further numerically analyze the digital representation of the received acoustic signal as distorted by the human heel to measure a change in shape of the waveform.

Thus it is another object of the invention to provide an extremely more accurate machine that provides both a measurement of transit speed of the ultrasonic wave and its attenuation such as may provide alternative views of the bone integrity or which may be combined to provide a more robust measurement of bone integrity. It has been determined that these two measurements supplement each other.

The measurement of the time of flight of the pulse and the measurement of pulse shape may be in comparison to previously measured a standard.

Thus it is another object of the invention to simplify the comparison of measurements to a standard by use of a microprocessor which may store earlier and later measurements.

The densitometer may include a digital display communicating with the microprocessor and the microprocessor may execute a stored program to provide data to that display indicating the physical property of the os calcis of the heel.

Thus it is another object of the invention to provide a densitometer having suitable accuracy for a digital display that provides a simple, quantitative and unambiguous measurement of bone integrity that may not be obtained from visual display of waveforms or frequency measurements in a sing around system.

The foregoing and other objects and advantages of the invention will appear from the following description. In this description, reference is made to the accompanying drawings which form a part hereof and in which there is shown by way of illustration, a preferred embodiment of the invention. Such embodiment does not necessarily represent the full scope of the invention, however, and reference must be made therefore to the claims for interpreting the scope of the invention.

BRIEF DESCRIPTION OF THE SEVERAL VIEWS OF THE DRAWINGS

FIG. **1** is a perspective view of the ultrasound densitometer device constructed in accordance with the present invention;

FIG. **2** is a perspective view of an acoustic coupler, two of which are shown in FIG. **1**;

FIG. **3** is a front view of a transducer face from which acoustic signals are transmitted or by which acoustic signals are received, the face of the other transducer being the mirror image thereof;

FIG. **4** is a schematic block diagram view of the circuitry of the ultrasound densitometer device constructed in accordance with the present invention;

FIG. **5** illustrates the method of sampling a received waveform used by the circuit of FIG. **4**;

FIG. **6** is a schematic block diagram view of the circuitry of an alternative embodiment of an ultrasound densitometer constructed in accordance with the present invention;

FIG. **7** is a sample of an actual ultrasonic pulse and response from an ultrasonic densitometer according to the present invention;

FIG. **8** is a sample plot of relative ultrasound pulse intensity over frequency range;

FIG. **9** is a graph in frequency domain illustrating the shift in attenuation versus frequency characteristic of a measured object as compared to a reference;

FIG. **10** is a perspective view of an alternative embodiment of the present invention showing a basin for receiving a patient's foot and having integral opposed ultrasonic transducers.

DETAILED DESCRIPTION OF THE INVENTION

Referring more particularly to the drawings, wherein like numbers refer to like parts, FIG. **1** shows a portable ultrasound densitometer **10** for measuring the physical properties and integrity of a member, such as a bone, in vivo. The densitometer **10** as shown in FIG. **1** includes a handle **11** with actuator button **12**. Extending linearly from the handle **11** is a connection rod **13**. The densitometer **10** also includes a fixed arm **15** and an adjustable arm **16**. The fixed arm **15** preferably is formed continuously with the connection rod **13**, and therefore is connected to an end **17** of the connection rod **13**. The adjustable arm **16** is slidably mounted on the connection rod **13** between the handle **11** and a digital display **18** mounted on the rod **13**. The knob **19** may be turned so as to be locked or unlocked to allow the adjustable arm **16** to be slid along the connection rod **13** so that the distance between the arms **15** and **16** may be adjusted.

Connected at the end of the fixed arm **15** is a first (left) transducer **21** and at the end of the adjustable arm **16** is a second (right) transducer **21**. As shown in FIGS. **1** and **2**, each of the transducers **21** has mounted on it a respective compliant acoustic coupler **23** to acoustically couple the transducer to the object being tested. The acoustic coupler **23** includes a plastic ring **24** and attached pad **26** formed of urethane or other compliant material. FIG. **3** shows a face **28** of the first (left) transducer **21** which is normally hidden behind the compliant pad **26** of the acoustic coupler **23**. The transducer face **28** normally abuts against the inner surface **29** of the pad **26** shown in FIG. **2**. The transducer face **28** shown in FIG. **3** includes an array of twelve transducer elements labeled a–l. The second (right) transducer **21** includes a face **28** which is the mirror image of that shown in FIG. **3**.

FIG. **4** generally shows in schematic fashion the electronic circuitry **31** of the densitometer **10**, which is physically contained in the housing of the digital display **18**. An object **32** is placed between the two transducers **21** so that

acoustic signals may be transmitted through the object. This object **32** represents a member, such as a bone, or some material with known acoustic properties such as distilled water or a neoprene reference block. As shown in the embodiment illustrated in FIG. **4**, the leftmost transducer **21** is a transmit transducer and the rightmost transducer **21** a receive transducer. In fact though, either or both of the transducers **21** may be a transmit and/or receive transducer. The transmit and receive transducers **21** of the circuit of FIG. **4** are connected by element select signals **36** and **37** to a microprocessor **38**. The microprocessor **38** is programmed to determine which one of the respective pairs of transducer elements a through l are to be transmitting and receiving at any one time. This selection is accomplished by the element select signal lines **36** and **37**, which may be either multiple signal lines or a serial data line to transmit the needed selection data to the transducers **21**. The microprocessor **38** is also connected by a data and address bus **40** to the digital display **18**, a digital signal processor **41**, a sampling analog to digital converter **42**, and a set of external timers **43**. The microprocessor **38** has "on board" electrically programmable non-volatile random access memory (NVRAM) and, perhaps as well, conventional RAM memory, and controls the operations of the densitometer **10**. The digital signal processor **41** has "on board" read-only memory (ROM) and performs many of the mathematical functions carried out by the densitometer **10** under the control of the microprocessor **38**. The digital signal processor **41** specifically includes the capability to perform discrete Fourier transforms, as is commercially available in integrated circuit form presently, so as to be able to convert received waveform signals from the time domain to the frequency domain. The microprocessor **38** and digital signal processor **41** are interconnected also by the control signals **45** and **46** so that the microprocessor **38** can maintain control over the operations of the digital signal processor **41** and receive status information back. Together the microprocessor **38** and the digital signal processor **41** control the electrical circuit **31** so that the densitometer **10** can carry out its operations, which will be discussed below. An auditory feedback mechanism **48**, such as an audio speaker, can be connected to the microprocessor **38** through an output signal **49**.

The external timer **43** provides a series of clock signals **51** and **52** to the A/D converter **42** to provide time information to the A/D converter **42** so that it will sample at timed intervals electrical signals which it receives ultimately from the transmit transducer, in accordance with the program in the microprocessor **38** and the digital signal processor **41**. The external timer **43** also creates a clock signal **53** connected to an excitation amplifier **55** with digitally controllable gain. Timed pulses are generated by the timer **43** and sent through the signal line **53** to the amplifier **55** to be amplified and directed to the transmit transducer **21** through the signal line **56**. The transmit transducer **21** converts the amplified pulse into an acoustic signal which is transmitted through the object or material **32** to be received by the receive transducer **21** which converts the acoustic signal back to an electrical signal. The electrical signal is directed through output signal **57** to a receiver amplifier **59** which amplifies the electrical signal.

The excitation amplifier circuit **55** is preferably a digitally controllable circuit designed to create a pulsed output. The amplification of the pulse can be digitally controlled in steps from one to ninety-nine. In this way, the pulse can be repetitively increased in amplitude under digital control until a received pulse of appropriate amplitude is received at the receiver/amplifier circuit **59**, where the gain is also digitally adjustable.

Connected to the receiver amplifier circuit **59** and integral therewith is a digitally controllable automatic gain control circuit which optimizes the sensitivity of the receive transducer **21** and the amplifier circuit **59** to received acoustic signals. The microprocessor **38** is connected to the amplifier circuit and automatic gain control **59** through signal line **60** to regulate the amplification of the amplifier circuit and gain control **59**. The amplified electric signals are directed through lead **61** to the A/D converter **42** which samples those signals at timed intervals. The A/D converter **42** therefore in effect samples the received acoustic signals. As a series of substantially identical acoustic signals are received by the receive transducer **21**, the A/D converter **42** progressively samples an incremental portion of each successive signal waveform. The microprocessor **38** is programmed so that those portions are combined to form a digital composite waveform which is nearly identical to a single waveform. This digitized waveform may be displayed on the digital display **18**, or processed for numerical analysis by the digital signal processor **41**.

The densitometer constructed in accordance with FIGS. **1–4** can be operated in one or more of several distinct methods to measure the physical properties of the member, such as integrity or density. The different methods, as described in further detail below, depend both on the software programming the operation of the microprocessor **34** as well as the instructions given to the clinician as to how to use the densitometer. The different methods of use may all be programmed into a single unit, in which case a user-selectable switch may be provided to select the mode of operation, or a given densitometer could be constructed to be dedicated to a single mode of use. In any event, for the method of use of the densitometer to measure the physical properties of a member to be fully understood, it is first necessary to understand the internal operation of the densitometer itself.

In any of its methods of use, the densitometer is intended to be placed at some point in the process on the member whose properties are being measured. This is done by placing the transducers **21** on opposite sides of the member. To accomplish this, the knob **19** is loosened to allow the adjustable arm **16** to be moved so that the transducers **21** can be placed on opposite sides of the member, such as the heel of a human patient. The outside surfaces of the pads **26** can be placed against the heel of the subject with an ultrasound gel **35** or other coupling material placed between the pads **26** and subject **32** to allow for improved transmission of the acoustic signals between the member **32** and transducers **21**. Once the transducers **21** are properly placed on the member, the knob **19** may be tightened to hold the adjustable arm **16** in place, with the transducers **21** in spaced relation to each other with the member **32** therebetween. The actuator button **12** may then be pressed so that acoustic signals will be transmitted through the member **32** to be received by the receive transducer **21**. The electronic circuit of FIG. **4** receives the electrical signals from the receive transducer **21**, and samples and processes these signals to obtain information on the physical properties and integrity of the member **32** in vivo. The microprocessor **38** is programmed to indicate on the digital display **18** when this information gathering process is complete. Alternatively, the information may be displayed on the digital display **18** when the information gathering process is completed. For example, the transit time of the acoustic signals through the member **32** could simply be displayed on the digital display **18**.

Considering in detail the operation of the circuitry of FIG. **4**, the general concept is that the circuitry. is designed to

create an ultrasonic pulse which travels from transmit transducer **21** through the subject **32** and is then received by the receive transducer **21**. The circuitry is designed to both determine the transit time of the pulse through the member **32**, to ascertain the attenuation of the pulse through the member **32**, and to be able to reconstruct a digital representation of the waveform of the pulse after it has passed through the member **32**, so that it may be analyzed to determine the attenuation at selected frequencies. To accomplish all of these objectives, the circuitry of FIG. **4** operates under the control of the microprocessor **38**. The microprocessor **38** selectively selects, through the element select signal lines **36**, a corresponding pair or a group of the elements a through l on the face of each of the transducers **21**. The corresponding elements on each transducer are selected simultaneously while the remaining elements on the face of each transducer are inactive. With a given element, say for example element a selected, the microprocessor then causes the external timer **43** to emit a pulse on signal line **53** to the excitation amplifier circuit **55**. The output of the excitation amplifier **55** travels along signal line **56** to element a of the transmit transducer **21**, which thereupon emits the ultrasonic pulse. The corresponding element a on the receive transducer **21** receives the pulse and presents its output on the signal line **57** to the amplifier circuit **59**. What is desired as an output of the A/D converter **42** is a digital representation of the analog waveform which is the output of the single transducer element which has been selected. Unfortunately, "real time" sampling A/D converters which can operate rapidly enough to sample a waveform at ultrasonic frequencies are relatively expensive. Therefore it is preferred that the A/D converter **42** be an "equivalent time" sampling A/D converter. By "equivalent time" sampling, it is meant that the A/D converter **42** samples the output of the transducer during a narrow time period after any given ultrasonic pulse. The general concept is illustrated in FIG. **5**. The typical waveform of a single pulse received by the receive transducer **21** and imposed on the signal line **57** is indicated by a function "f". The same pulse is repetitively received as an excitation pulse and is repetitively launched. The received pulse is sampled at a sequence of time periods labeled t_0–t_{10}. In other words, rather than trying to do a real-time analog to digital conversion of the signal f, the signal is sampled during individual fixed time periods t_0–t_{10} after the transmit pulse is imposed, the analog value during each time period is converted to a digital function, and that data is stored. Thus the total analog waveform response can be recreated from the individual digital values created during each time period t, with the overall fidelity of the recreation of the waveform dependent on the number of time periods t which are sampled. The sampling is not accomplished during a single real time pulse from the receive transducer **21**. Instead, a series of pulses are emitted from the transmit transducer **21**. The external timer is constructed to provide signals to the sampling A/D converter **42** along signal lines **51** and **52** such that the analog value sampled at time period to when the first pulse is applied to a given transducer element, then at time t_1 during the second pulse, time t_2 during the third pulse, etc. until all the time periods are sampled. Only after the complete waveform has been sampled for each element is the next element, i.e. element b, selected. The output from the A/D converter **42** is provided both to the microprocessor **38** and to the signal processor **41**. Thus the digital output values representing. the complex waveform f of FIG. **5** can be processed by the signal processor **41** after they are compiled for each transducer element. The waveform can then be analyzed for time delay or attenuation for any given frequency component with respect to the characteristic of the transmitted ultrasonic pulse. The process is then repeated for the other elements until all elements have been utilized to transmit a series of pulses sufficient to create digital data representing the waveform which was received at the receive transducer array **21**. It is this data which may then be utilized in a variety of methods for determining the physical properties of the member. Depending on the manner in which the densitometer is being utilized and the data being sought, the appropriate output can be provided from either the microprocessor **38** or the signal processor **41** through the digital display **18**.

Because the ultrasonic pulsing and sampling can be performed so rapidly, at least in human terms, the process of creating a sampled ultrasonic received pulse can optionally be repeated several times to reduce noise by signal averaging. If this option is to be implemented, the process of repetitively launching ultrasonic pulses and sampling the received waveform as illustrated in FIG. **5** is repeated one or more times for each element in the array before proceeding to the next element. Then the sampled waveforms thus produced can be digitally averaged to produce a composite waveform that will have a lesser random noise component than any single sampled waveform. The number of repetitions necessary to sufficiently reduce noise can be determined by testing in a fashion known to one skilled in the art.

Having thus reviewed the internal operation of the densitometer of FIGS. **1–4**, it is now possible to understand the methods of use of the densitometer to measure the physical properties of the member. The first method of use involves measuring transit time of an ultrasonic pulse through a subject and comparing that time to the time an ultrasonic pulse requires to travel an equal distance in a substance of known acoustic properties such as water. To use the densitometer in this procedure, the adjustable arm **16** is adjusted until the member of the subject, such as the heel, is clamped between the transducers **21**. Then the knob **19** is tightened to fix the adjustable arm in place. The actuator button **12** is then pressed to initiate a pulse and measurement. Next the densitometer is removed from the subject while keeping the knob **19** tight so that the distance between the transducers **21** remains the same. The device **10** is then placed about or immersed in a standard material **32** with known acoustic properties, such as by immersion in a bath of distilled water. The actuator button **12** is pressed again so that acoustic signals are transmitted from the transmit transducer **21** through the material **32** to the receive transducer **21**. While it is advantageous to utilize the whole array of elements a through l for the measurement of the member, it may only be necessary to use a single pair of elements for the measurement through the standard assuming only that the standard is homogeneous, unlike the member. The signal profiles received by the two measurements are then analyzed by the microprocessor **38** and the signal processor **41**. This analysis can be directed both to the comparative time of transit of the pulse through the subject as compared to the standard and to the characteristics of the waveform in frequency response and attenuation through the subject as compared to the standard.

Thus in this method the densitometer may determine the physical properties and integrity of the member **32** by both or either of two forms of analysis. The densitometer may compare the transit time of the acoustic signals through the member with the transmit time of the acoustic signals through the material of known acoustic properties, and/or the device **10** may compare the attenuation as a function of frequency of the broadband acoustic signals through the

member **32** with the attenuation of corresponding specific frequency components of the acoustic signals through the material of known acoustic properties. The "attenuation" of an acoustic signal through a substance is the diminution of the ultrasonic waveform from the propagation through either the subject or the standard. The theory and experiments using both of these methods are presented and discussed in Rossman, P. J., Measurements of Ultrasonic Velocity and Attenuation In The Human Os Calcis and Their Relationships to Photon Absorptiometry Bone Mineral Measurements (1987) (a thesis submitted in partial fulfillment of the requirements for the degree of Master of Science at the University of Wisconsin-Madison). Tests have indicated that there exists a linear relationship between ultrasonic attenuation (measured in decibels) (dB)) at specific frequencies, and those frequencies. The slope (dB/MHz) of the linear relationship, referred to as the broadband ultrasonic attenuation, is dependent upon the physical properties and integrity of the substance being tested. With a bone, the slope of the linear relationship would be dependent upon the bone mineral density. Thus broadband ultrasonic attenuation through a bone is a parameter directly related to the quality of the cancellous bone matrix.

The microprocessor **38** may therefore be programmed so that the device determines the physical properties and integrity of the member by comparing either relative transit times and/or relative broadband ultrasonic attenuation through the member and a material of known acoustic properties. When comparing the transit times, the microprocessor **38** may be programmed most simply so that the electronics, having received the acoustic signals after they have been transmitted through the member, determines the "member" transit time of those acoustic signals through the member, and after the acoustic signals have been transmitted through the material of known acoustic properties, determines the "material" transit time of the acoustic signals through the material. These time periods may be measured most simply by counting the number of clock pulses of known frequency emitted by the timer **43** between the time of launching the pulse and the sensing of the received pulse at the A/D converter **42**. The microprocessor **38** then makes a mathematical "time" comparison of the member transit time to the material transit time and then relates that mathematical time comparison to the physical properties and integrity of the member. The mathematical time comparison may be made by either determining a difference between the member transit time and the material transit time, or by determining a ratio between the member transit time and the material transit time.

As a second method of using the densitometer, it may also determine the physical properties and integrity of the member **32** by determining and comparing the attenuation of the broadband frequency components of the acoustic signals through the member without reference to a material having known acoustic properties. Using this method, the comparison of velocity to a standard is not necessary and absolute transit time of the pulse need not be calculated since it is attenuation that is measured. In such a mode, it is preferable that the transmit transducer **21** transmits an acoustic signal which has a broad range of frequency components, such as a simple ultrasonic pulse. In any case, the acoustic signal should have at least one specific frequency component.

In this attenuation comparison mode, the microprocessor **38** is programmed so that after the receive transducer **21** receives the acoustic signals transmitted through the bone member **32**, it determines the absolute attenuation through the member **32** of the frequency component spectrum of the acoustic signals. It is to facilitate the measurement of attenuation that the excitation amplifier circuit **55** and the receiver amplifier **59** have amplification levels which may be digitally controlled. By successively varying the gain of the amplifiers **55** and **59** on successive pulses, the circuit of FIG. **4** can determine what level of gain is necessary to place the peak of the received waveform at a proper voltage level. This gain is, of course, a function of the level of attenuation of the acoustic pulse during transit through the member **32**. After the receive transducer **21** receives acoustic signals, microprocessor **38** in conjunction with the signal processor **41** determines the absolute attenuation of individual specific frequency components of the received acoustic signal transmitted through the material. The digital signal processor **41** then makes mathematical "attenuation" comparisons of the corresponding individual specific frequency components through the member. A set of mathematical attenuation comparisons between corresponding frequency components may be thereby obtained, one comparison for each frequency component compared. The manner in which the attenuation functions with respect to frequency can thus be derived. The microprocessor **38** and digital signal processor **41** then relate that function to the physical properties and integrity of the member.

Shown in FIG. **7** is a sample broadband ultrasonic pulse and a typical received waveform. To achieve an ultrasonic signal that is very broad in the frequency domain, i.e., a broadband transmitted signal, an electronic pulse such as indicated at **70** is applied to the selected ultrasonic transducer in the transmit array **21** which then resonates with a broadband ultrasonic emission. The received signal, such as indicated at **72** in FIG. **7** in a time domain signal plot, is then processed by discrete Fourier transform analysis so that it is converted to the frequency domain. Shown in FIG. **8** is a pair of plots of sample received signals, in frequency domain plots, showing the shift in received signal intensity as a function of frequency between a reference object and a plug of neoprene placed in the instrument. FIG. **9** illustrates a similar comparison, with FIG. **8** using relative attenuation in the vertical dimension and FIG. **9** using power of the received signal using a similar reference material. Both representations illustrate the difference in relative intensities as a function of frequency illustrating how broadband ultrasonic attenuation varies from object to object. The actual value calculated, broadband ultrasonic attenuation, is calculated by first comparing the received signal against the reference signal, then performing the discrete Fourier transform to convert to frequency domain, then performing a linear regression of the difference in attenuation slope to derive broadband ultrasonic attenuation.

The mathematics of the discrete Fourier transform are such that another parameter related to bone member density may be calculated in addition to, or in substitution for, broadband attenuation (sometimes referred to as "attenuation" or "BUA" below). When the discrete Fourier transform is performed on the time-domain signal, the solution for each point includes a real member component and an imaginary member component. The values graphed in FIGS. **8** and **9** are the amplitude of the received pulse as determined from this discrete Fourier transform by taking the square root of the sum of the squares of the real component and the imaginary component. The phase angle of the change in phase of the ultrasonic pulse as it passed through the member can be calculated by taking the arctangent of the ratio of the imaginary to the real components. This phase angle value is also calculated to bone member density.

The microprocessor **38** may also be programmed so that the densitometer simultaneously performs both functions,

i.e. determines both transit time and absolute attenuation of the transmitted acoustic signals, first through the member and then through the material with known acoustic properties. The densitometer may then both derive the broadband ultrasonic attenuation function and make a mathematical time comparison of the member transit time to the material transit time. The microprocessor **38** and digital signal processor **41** then relate both the time comparison along with the attenuation function to the physical properties and integrity, or density of the member **32**.

In yet another possible mode of operation, the microprocessor **38** may be programmed so that the densitometer **10** operates in a mode whereby the need for calculating either the relative transit time or the attenuation of the acoustic signals through a material of known acoustic properties is eliminated. In order to operate in such a mode, the microprocessor **38** would include a database of normal absolute transit times which are based upon such factors as the age, height, weight, race or the sex of the individual being tested as well as the distance between the transducers or the thickness or size of the member. This database of normal transit times can be stored in the non-volatile memory or could be stored in other media. When testing an individual in this mode, the relevant factors for the individual are placed into the microprocessor **38** to select the pertinent normal transit time based on those factors. The transducers **21** are placed on the bone member being tested as described above. When the actuator button **12** is pressed, the acoustic signals are transmitted through the member **32**. The receive transducer **21** receives those signals after they have been transmitted through the member, and the electronics **31** then determine the "member" transit time of the acoustic signals through the member. The microprocessor **38** and digital signal processor **41** then make a mathematical comparison of the measured member transit time to the selected database normal transit time, and relate the mathematical time comparison to the physical properties and integrity, or density of the member, which is displayed.

As an alternative output of the densitometer of the present invention, the digital display **18** could also include a display corresponding to the pattern of the array of elements on the face of the transducer **21** as seen in FIG. **3**. This display could then display, for each element a through l, a gray scale image proportional to the parameter, i.e. transit time or attenuation, being measured. This image may provide a visual indication to an experienced clinician as to the physical properties of the member present in the patient.

Shown in FIG. **6** is a circuit schematic for an alternative embodiment of an ultrasonic densitometer constructed in accordance with the present invention. In the circuit of FIG. **6**, parts having similar structure and function to their corresponding parts in FIG. **4** are indicated with similar reference numerals.

The embodiment of FIG. **6** is intended to function with only a single transducer array **21** which functions both as the transmit and the receive transducer array. An optional reflecting surface **64** may be placed on the opposite side of the member **32** from the transducer array **21**. A digitally controlled multiple pole switch **66**, preferably an electronic switch rather than a mechanical one, connects the input to and output from the elements of the transducer array **21** selectively either to the excitation amplifier **55** or to the controllable gain receiver/amplifier circuit **59**. The switch **66** is connected by a switch control line **68** to an output of the microprocessor **38**.

In the operation of the circuit of FIG. **6**, it functions in most respects like the circuit of FIG. **4**, so only the differences need be discussed. During the launching of an ultrasonic pulse, the microprocessor **38** causes a signal to appear on the switch control line **68** to cause the switch **66** to connect the output of the excitation amplifier **55** to the selected element in the transducer array **21**. Following completion of the launching of the pulse, the microprocessor **38** changes the signal on the switch control line **68** to operate the switch **66** to connect the selected element or elements as an input to the amplifier **59**. Meanwhile, the pulse propagates through the member **32**. As the pulse transits through the member, reflective pulses will be generated as the pulse crosses interfaces of differing materials in the member and, in particular, as the pulse exits the member into the air at the opposite side of the member. If the transition from the member to air does not produce a sufficient reflective pulse, the reflecting surface **64** can be placed against the opposite side of the member to provide an enhanced reflected pulse.

The embodiment of FIG. **6** can thus be used to analyze the physical properties and integrity of a member using only one transducer **21**. All of the methods described above for such measurements may be used equally effectively with this version of the device. The transit time of the pulse through the member can be measured simply by measuring the time period until receipt of the reflected pulse, and then simply dividing by two. This time period can be compared to the transit time, over a similar distance, through a standard medium such as water. The time period for receipt of the reflected pulse could also be simply compared to standard values for age, sex, etc. Attenuation measurements to detect differential frequency measurement can be directly made on the reflected pulse. If no reflecting surface **64** is used, and it is desired to determine absolute transit time, the thickness of the member or sample can be measured.

The use of the multi-element ultrasonic transducer array for the transducers **21**, as illustrated in FIG. **3**, enables another advantageous feature of the instrument of FIGS. **1–9**. In using prior art densitometers, it was often necessary to precisely position the instrument relative to the body member of the patient being measured to have useful results. The difficulty arises because of heterogeneities in the bone mass and structure of actual body members. A measurement taken at one location of density may be significantly different from a measurement taken close by. Therefore prior art instruments fixed the body member precisely so that the measurement could be taken at the precise location each time.

The use of the ultrasonic transducer array obviates the need for this precise positioning. Using the instrument of FIGS. **1–9**, the instrument performs a pulse and response, performs the discrete Fourier transform, and generates a value for broadband ultrasonic attenuation for each pair of transducer elements a through l. Then the microprocessor **38** analyzes the resulting array of bone ultrasonic density measurements to reproducibly identify the same region of interest each time. In other words, since the physical array of transducers is large enough to reliably cover at least the one common region of interest each time, the measurement is localized at the same locus each time by electrically selecting the proper location for the measurement from among the locations measured by the array. The instrument of FIGS. **1–9** is conveniently used by measuring the density of the os calcis as measured through the heel of a human patient. When used in this location, it has been found that a region of interest in the os calcis can be located reliably and repeatedly based on the comparisons of broadband ultrasonic attenuation at the points in the array. The region of interest in the os calcis is identified as a local or relative

minimum in broadband ultrasonic attenuation and/or velocity closely adjacent the region of highest attenuation values in the body member. Thus repetitive measurements of the broadband ultrasonic attenuation value at this same region of interest can be reproducibly taken even though the densitometer instrument **10** is only generally positioned at the same location for each successive measurement.

This technique of using a multiple element array to avoid position criticality is applicable to other techniques other than the determination of broadband ultrasonic attenuation as described here. The concept of using an array and comparing the array of results to determine measurement locus would be equally applicable to measurements taken of member-density based on speed of sound transit time, other measurements of attenuation or on the calculation of phase angle discussed above. The use of such a multiple-element array, with automated selection of one element in the region of interest, can also be applied to other measurement techniques useful for generating parameters related to bone member density, such as measuring speed changes in the transmitted pulse such as suggested in U.S. Pat. No. 4,361,154 to Pratt, or measuring the frequency of a "sing-around" self-triggering pulse as suggested in U.S. Pat. No. 3,847,141 to Hoop. The concept which permits the position independence feature is that of an array of measurements generating an array of data points from which a region of interest is selected by a reproducible criterion or several criteria. The number of elements in the array also clearly can be varied with a larger number of elements resulting in a greater accuracy in identifying the same region of interest.

In this way, the ultrasound densitometer of the present invention provides a device capable of rapid and efficient determination of the physical properties of a member in vivo without the use of radiation. Because the densitometer is constructed to operate under the control of the microprocessor **38**, it can be programmed to operate in one of several modes, as discussed above. This allows both for flexibility to clinical goals as well as efficient use of the device.

Shown in FIG. **10** is another variation on an ultrasonic densitometer constructed in accordance with the present invention. In the densitometer **100** of FIG. **10**, there are two ultrasonic transducer arrays **121**, which are generally similar to the ultrasonic transducer arrays **21** of the embodiment of FIG. **1**, except that the transducer arrays **21** are fixed in position rather than movable.

The densitometer **100** includes a relatively large mounting case **101**, which in this embodiment is rectangular in the top of which is formed a depression or basin **103**. The basin as in **103** is elongated and has a generally triangular cross-sectional shape sized so as to receive a human foot therein. The transducer arrays **121** are positioned in the case **101** so that they extend into the base in **103** to be on the opposite sides of the heel of a foot placed in the basin **103**. The general arrangement of the electrical components of FIG. **4** is unchanged in the ultrasonic densitometer **100** of FIG. **10**, except that because the transducer arrays **12** are fixed, they do not contact the opposite sides of the heel of the patient but instead are located spaced away from it.

In the operation of the ultrasonic densitometer **100** of FIG. **10**, the basin **103** is filled with water. The patient places his or her foot in the basin **103** with their sole resting on the bottom and their heel resting against the back of the basin **103**. The intent is to position the transducer arrays **121** on either side of the os calcis. For the average adult population, it has been demonstrated that placing the transducers approximately 4 cm up from the sole and 3.5 cm forwardly from the rearward edge of the heel places the transducers in the desired region and focused on the os calcis.

The principle of operation of the ultrasonic densitometer of FIG. **10** can be understood as similar to that of FIG. **1**, except that the order of pulsing and measurement can be varied. In the apparatus of FIG. **1**, the measurement pulse through the member was generally performed before the reference pulse through the homogeneous standard, i.e. water. In the densitometer **100** of FIG. **10**, since the distance between the transducers is fixed, the reference pulse through the homogeneous standard material, which is simply the water in the basin **103**, may be conducted either before or after measurement pulse through a live member is performed. In fact, if the temperature of the water in basin **103** is held steady by a temperature control mechanism, the standard transit time measurement can be simply made once for the instrument and thereafter only measurement pulses need be transmitted. The transit times of the measurement pulses then may be correlated to the standard reference transit time through the water to give an indication of the integrity of the member just measured. Through empirical experimentation with the densitometer of FIG. **10**, it has been determined that it is also possible if desired to dispense with the reference pulse entirely. This may be done by determining a standard transit time value or, since the distance between the transducers is fixed, a standard transit velocity. By empirical testing, it has been determined that by proper selection of such a standard value, and by holding the water in the basin within a temperature range, no reference pulse need be launched or measured.

Using this variation, a mathematical relation of the measured transit time, or transit velocity, must be made to the standard. Since in the interests of accuracy, it is preferred to use both changes in transit time (velocity) and changes in attenuation to evaluate a member in vivo, the following formula has been developed to provide a numerical value indicative of the integrity and mineral density of a bone:

$$\text{Bone integrity value}=(SOS-T)^2\times(BUA/1000)$$

In this formula, "SOS" indicates the speed of sound or velocity of the measurement ultrasonic pulse through the member and is expressed in meters per second. The speed of sound (SOS) value is calculated from the measured transit time measured. For an adult human heel, it has been found that assuming a standard human heel width of 40 mm at the point of measurement results in such sufficient and reproducible accuracy that actual measurement of the actual individual heel is not needed.

In the above formula, "T" represents a standard minimum value. Two alternative values are possible. One alternative is to set T to the speed of sound value for water, i.e., the reference pulse velocity. This value is about 1500 n/sec for water at 28° C. The principal drawback to this approach is that it has been found surprisingly that some people actually have a density value in their heel that is below that of water. For such persons, using the standard water velocity would make the bone integrity value a negative number. Therefore, another alternative is to use the lowest measured human value as T which in the experience of the investigators here to date is 1475 n/sec.

Lastly in the above formula, BUA is broadband ultrasonic attenuation as described in greater detail above. The division of 1000 merely scales the influence of the BUA measurement relative to the SOS measurement which has been determined to be a more effective predictor of bone density.

Measured values of SOS range between 1475 and 1650 m/sec. Measured values of BUA range between 30 and 100

dB/MHz. Using a T=1475, these ranges yield values ranging from very small, i.e., 18 up to relatively large, i.e., around 3000. Thus the bone integrity values thus obtained exhibit a wide range and are readily comprehensible. It has been determined again by clinical testing that persons with a bone integrity value of less than 200 have low spinal bone mineral density, that those in the range of 200–400 have marginal spinal bone mineral density and that those having bone integrity values of over 400 have acceptable and high levels of spinal bone mineral density.

To verify the accuracy of this approach in predicting spinal bone density, patients were tested using the apparatus of FIG. **10** and also with a dual photon absorptiometry densitometer of accepted standard design. The results of using the ultrasonic densitometer of FIG. **10** have demonstrated that the speed of sound measurement made using this device had a correlation in excess of 0.95 with the measured values of spinal bone density indicating very good consistency with accepted techniques. However, an occasional patient was tested who exhibited an SOS value in the normal range, but who exhibited a BUZ value indicating very poor bone integrity. Accordingly, the bone integrity value was developed to accommodate such deviant results. The value is weighted toward the SOS since that is the principally used reliable predictor value with a secondary factor including BUA to include such individuals. In fact, the power of the SOS factor may also be increased to the third or fourth power as opposed to merely the second power, to increase the importance of the SOS term. Since this method utilizing ultrasonic measurement of the heel is quick and free from radiation, it offers a promising alternative for evaluation of bone integrity.

The densitometer **100** may be used with or without an array of ultrasonic transducers in the transducers **121**. In its simplest form, the mechanical alignment of the heel in the device can be provided by the shape and size of the basin **103**. While the use of an array and region-of-interest scanning as described above is most helpful in ensuring a reproducible accurate measurement, mechanical placement may be acceptable for clinical utility in which case only single transducer elements are required.

It is specifically intended that the present invention not be specifically limited to the embodiment and illustrations contained herein, but embrace all such modified forms thereof as come within the scope of the following claims.

What is claimed is:

1. An ultrasonic instrument for measurement of the human os calcis in vivo comprising:

a first ultrasonic transducer and a second ultrasonic transducer;

a support holding the first and second ultrasonic transducers in opposition about a volume sized to receive a human heel, the support further allowing adjustment of the separation distance between the first and second ultrasonic transducers;

a restraining mechanism communicating with the support to hold the first and second ultrasonic transducers at a contact separation contacting a human heel placed within the volume;

signal-processing circuitry electrically connected to the first and second ultrasonic transducers to provide an ultrasonic signal to the first ultrasonic transducer and to receive a corresponding attenuated ultrasonic signal from the second ultrasonic transducer at the contact separation; and

a microprocessor receiving a digitized form of the received ultrasonic signal from the signal processing circuitry and executing a stored program to compute a measure of bone quality based on attenuation of ultrasound by the heel.

2. The instrument of claim **1** wherein the microprocessor further executes the stored program to provides an indication of attenuation of specific frequency components through the human heel.

3. The instrument of claim **1** wherein the signal-processing circuitry provides at least two ultrasonic signals to the first transducer and receives at least two corresponding attenuated ultrasonic signals from the second ultrasonic transducer at the contact separation, wherein a first pulse may be propagated through a human heel and a second ultrasonic pulse may be propagated through a standard material of known qualities;

wherein the microprocessor executes the stored program to compute a measure of bone quality based on attenuation of ultrasound by the heel by comparing the attenuation of the first ultrasonic pulse with the attenuation of the second ultrasonic pulse.

4. The instrument of claim **1** wherein the signal-processing circuitry provides multiple ultrasonic signals to the first transducer and receives multiple corresponding attenuated ultrasonic signals from the second ultrasonic transducer at the contact separation;

wherein the microprocessor executes the stored program to compute a measure of bone quality based on attenuation of ultrasound by the heel by averaging the multiple attenuated ultrasonic signals.

5. The instrument of claim **1** wherein the signal processing circuitry includes a digitally controlled amplifier controlled by the microprocessor to adjust the amplification of the ultrasonic signal.

6. The instrument of claim **1** wherein the microprocessor operates according to the stored program to increase the amplitude of the transmitted ultrasonic signal in steps while monitoring the attenuated ultrasonic signal.

7. The instrument of claim **1** wherein the digitized form of the received ultrasonic signal from the signal processing circuitry is provided by an analog to digital converter connected between the second ultrasonic transducer and the microprocessor;

wherein the signal processing circuitry further includes a digitally controllable amplifier connected between the second ultrasonic transducer and the analog to digital converter to receive the electrical signal from the second ultrasonic transducer and to receive a control signal from the microprocessor;

wherein the microprocessor operates according to the stored program to control the amplification of the electronic signal from the second ultrasonic transducer prior to its receipt by the analog to digital converter.

8. The instrument of claim **1** wherein the microprocessor further executes the stored program to compute a measure of bone quality based on the time of flight of ultrasound through the heel.

9. The instrument of claim **8** wherein the signal-processing circuitry provides at least two ultrasonic signals to the first transducer and receives at least two corresponding attenuated ultrasonic signals from the second ultrasonic transducer at the contact separation, wherein a first ultrasonic pulse may be propagated through a human heel and a second ultrasonic pulse may be propagated through a standard material of known qualities;

wherein the microprocessor executes the stored program to compute a measure of bone quality based on time of

flight of ultrasound through the heel by comparing the attenuation of the first ultrasonic pulse with the attenuation of the second ultrasonic pulse.

10. The instrument of claim **8** wherein the signal-processing circuitry provides multiple ultrasonic signals to the first transducer and receives multiple corresponding attenuated ultrasonic signal from the second ultrasonic transducer at the contact separation;

wherein the microprocessor executes the stored program to compute a measure of bone quality based on time of flight of ultrasound through the heel by averaging the multiple attenuated ultrasonic signals.

11. The instrument of claim **8** wherein the signal processing circuitry includes a digitally controlled amplifier controlled by the microprocessor to adjust the amplification of the ultrasonic signal.

12. The instrument of claim **11** wherein the microprocessor operates according to the stored program to increase the amplitude of the transmitted ultrasonic signal in steps while monitoring the attenuated ultrasonic signal.

13. The instrument of claim **11** wherein the digitized form of the received ultrasonic signal from the signal processing circuitry is provided by analog to digital converter connected between the second ultrasonic transducer and the microprocessor and

wherein the signal processing circuitry further includes a digitally controllable amplifier connected between the second ultrasonic transducer and the analog to digital converter to receive the electrical signal from the second ultrasonic transducer and to receive a control signal from the microprocessor;

and wherein the microprocessor operates according to the stored program to control the amplification of the electronic signal from the second ultrasonic transducer prior to its receipt by the analog to digital converter.

14. The instrument of claim **1** wherein at least one of the first and second transducers includes a compliant acoustic coupling pad at a transducer face.

15. The instrument of claim **1** wherein the signal processing circuitry produces an ultrasonic signal that is a broadband pulse.

16. The instrument of claims **1** through **15** including a digital display communicating with the microprocessor to receive and display the measure of bone quality.

17. A method of making ultrasonic measurement of the human os calcis in vivo comprising the steps of:

adjusting a first and second ultrasonic transducer to be in contact on opposite sides of a human heel;

maintaining the ultrasonic transducers in contact with the heel while transmitting an ultrasonic signal from the first ultrasonic transducer through the heel to the second ultrasonic transducer to obtain a corresponding attenuated ultrasonic signal from the second ultrasonic transducer;

computing a measure of bone quality based on attenuation of the attenuated ultrasonic signal; and

displaying the computed measure of bone quality.

18. The method of claim **17** wherein the measure of bone quality provides an indication of attenuation of specific frequency components through the human heel.

19. The method of claim **17** including the step of transmitting another ultrasonic pulse through a standard material of known qualities; and

wherein the measure of bone quality is computed from comparing the attenuation of ultrasound by the heel to the attenuation of ultrasound by the standard material.

20. The method of claim **17** including the step of transmitting multiple ultrasonic signals at the contact separation; and

wherein the measure of bone quality is computed by averaging the multiple attenuated ultrasonic signals.

21. The method of claim **17** wherein the computation of bone quality is performed by a microprocessor and including the step of adjusting the amplification of the transmitted ultrasonic signal prior to transmission according to a signal from the microprocessor.

22. The method of claim **21** including the step of increasing the amplitude of the transmitted ultrasonic signal in steps while monitoring the attenuated ultrasonic signal.

23. The method of claim **17** including the step of digitizing the attenuated ultrasonic signal for processing by a microprocessor to compute the measure of bone quality and

further including the step of adjusting the amplification of the attenuated ultrasonic signal by the microprocessor prior to digitization.

24. The method of claim **17** further including the step of computing a measure of bone quality based on the time of flight of ultrasound through the heel.

25. The method of claim **24** including the step of transmitting another ultrasonic pulse through a standard material of known qualities; and

wherein the measure of bone quality is computed from comparing the attenuation of ultrasound by the heel to the attenuation of ultrasound by the standard material.

26. The method of claim **24** including the step of transmitting multiple ultrasonic signals at the contact separation; and

wherein the measure of bone quality is computed by averaging the multiple attenuated ultrasonic signals.

27. The method of claim **24** wherein the computation of bone quality is performed by a microprocessor and including the step of adjusting the amplification of the transmitted ultrasonic signal prior to transmission according to a signal from the microprocessor.

28. The method of claim **27** including the step of increasing the amplitude of the transmitted ultrasonic signal in steps while monitoring the attenuated ultrasonic signal.

29. The method of claim **24** including the step of digitizing the attenuated ultrasonic signal for processing by a microprocessor to compute the measure of bone quality and

further including the step of adjusting the amplification of the attenuated ultrasonic signal by the microprocessor prior to digitization.

30. The method of claim **17** wherein at least one of the first and second transducers includes a compliant acoustic coupling pad at a transducer face.

31. The method of claim **17** wherein the signal processing circuitry produces an ultrasonic signal that is a broadband ultrasonic pulse.

32. The method of claims **17** through **31** including the step of displaying the measure of bone quality.

* * * * *

专利名称(译)	联系数字超声波密度计		
公开(公告)号	US6364837	公开(公告)日	2002-04-02
申请号	US09/561125	申请日	2000-04-28
申请(专利权)人(译)	LUNAR CORPORATION		
当前申请(专利权)人(译)	LUNAR CORPORATION		
[标]发明人	MAZESS RICHARD B WIENER SCOTT A MORRIS RICHARD F		
发明人	MAZESS, RICHARD B. WIENER, SCOTT A. MORRIS, RICHARD F.		
IPC分类号	A61B8/00 A61B8/06 A61B8/02 A61B8/08		
CPC分类号	A61B8/4483 A61B8/0875		
代理机构(译)	夸尔斯和BRADY LLP		
优先权	61/277481 1999-03-26 US 08/795025 1997-02-19 US		
外部链接	Espacenet USPTO		

摘要(译)
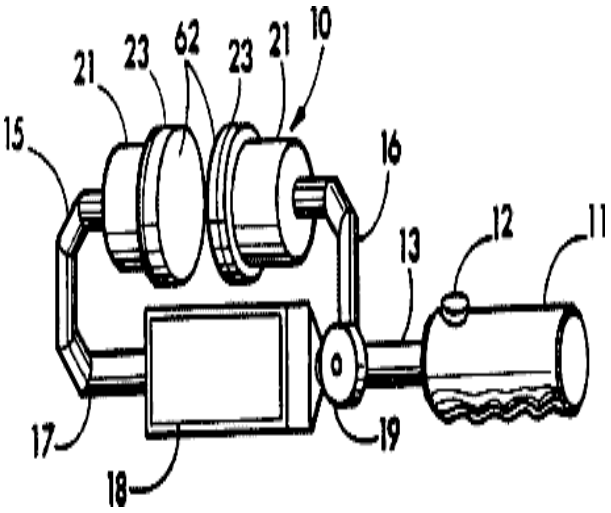
超声仪器采用数字架构，以提高体内人体骨骼声速测量的稳定性。接收的超声信号的数字化允许应用数值分析来确定波形的精确到达时间。微处理器可以启动超声信号传输并检测其到达，并且可以控制发送信号的强度和接收信号的放大以优化信号路径。