US009675323B2

(12) **United States Patent**
McKinnis et al.

(10) **Patent No.: US 9,675,323 B2**
(45) **Date of Patent: Jun. 13, 2017**

(54) **INTERNAL ULTRASOUND ASSEMBLY WITH PORT FOR FLUID INJECTION**

(71) Applicant: **Muffin Incorporated**, West Lafayette, IN (US)

(72) Inventors: **Peter S. McKinnis**, West Lafayette, IN (US); **Yun Zhou**, West Lafayette, IN (US); **Sarah Robbins**, Lafayette, IN (US); **Neal E. Fearnot**, West Lafayette, IN (US)

(73) Assignee: **Muffin Incorporated**, West Lafayette, IN (US)

(*) Notice: Subject to any disclaimer, the term of this patent is extended or adjusted under 35 U.S.C. 154(b) by 449 days.

(21) Appl. No.: **14/211,780**

(22) Filed: **Mar. 14, 2014**

(65) **Prior Publication Data**

US 2014/0276083 A1 Sep. 18, 2014

Related U.S. Application Data

(60) Provisional application No. 61/787,768, filed on Mar. 15, 2013.

(51) **Int. Cl.**
A61B 8/00 (2006.01)
A61B 8/12 (2006.01)
(Continued)

(52) **U.S. Cl.**
CPC ***A61B 8/4281*** (2013.01); ***A61B 8/12*** (2013.01); ***A61B 8/4272*** (2013.01); ***A61B 8/445*** (2013.01);
(Continued)

(58) **Field of Classification Search**
CPC A61B 1/00064; A61B 8/445
See application file for complete search history.

(56) **References Cited**

U.S. PATENT DOCUMENTS

2,790,095 A 4/1957 Peek et al.
4,421,118 A 12/1983 Dow et al.
(Continued)

FOREIGN PATENT DOCUMENTS

JP 06-209939 A 8/1994
JP 1994-209929 A * 8/1994 ..... A61B 8/12
(Continued)

OTHER PUBLICATIONS

International Search Report and Written Opinion issued in PCT/US2013/064570, dated Jan. 24, 2014.
(Continued)

Primary Examiner — Katherine Fernandez
Assistant Examiner — Michael Kellogg

(57) **ABSTRACT**

There are disclosed embodiments of devices and methods for imaging the inside of a body part, particularly a blood vessel. In particular embodiments, a catheter has a tip chamber, within which is an ultrasound transducer mounted on a pivot mechanism, a motor for turning the transducer, and an implement for pivoting the transducer. Examples of such an implement are a linear motor, a shaft or filament, and the pivot mechanism may be biased to return to a base position when the implement is not pivoting the transducer. In other embodiments, a mirror reflecting ultrasound signals from the transducer may be rotated and/or pivoted, using similar mechanisms.

39 Claims, 3 Drawing Sheets

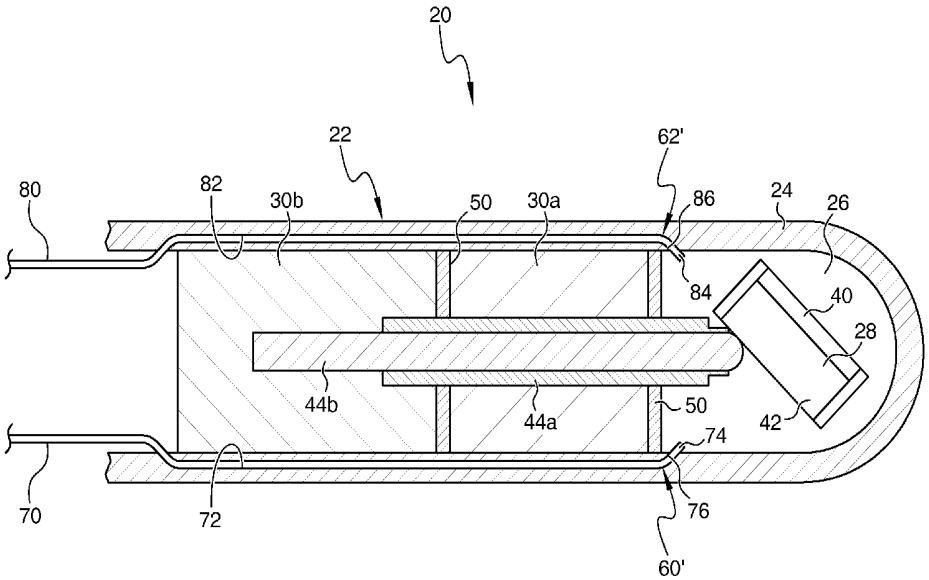

(51) **Int. Cl.**

A61B 1/00	(2006.01)
A61B 8/08	(2006.01)
A61N 7/02	(2006.01)
A61N 7/00	(2006.01)

(52) **U.S. Cl.**

CPC ***A61B 8/4461*** (2013.01); *A61B 1/00064* (2013.01); *A61B 8/0891* (2013.01); *A61N 7/022* (2013.01); *A61N 2007/0043* (2013.01); *A61N 2007/0082* (2013.01)

(56) **References Cited**

U.S. PATENT DOCUMENTS

4,785,816	A	11/1988	Dow et al.	
5,237,884	A	8/1993	Seto	
5,373,845	A	12/1994	Gardineer et al.	
5,437,283	A	8/1995	Ranalletta et al.	
5,535,715	A	7/1996	Mouton	
5,611,246	A	3/1997	Long et al.	
6,248,074	B1	6/2001	Ohno et al.	
6,354,814	B1	3/2002	Kaufmann et al.	
6,371,915	B1	4/2002	Koger et al.	
7,798,971	B2	9/2010	Flesch et al.	
8,206,307	B2	6/2012	Barnard et al.	
8,214,010	B2	7/2012	Courtney et al.	
2002/0082503	A1	6/2002	Chandrasekaran et al.	
2002/0087083	A1	7/2002	Nix et al.	
2002/0143252	A1	10/2002	Dunne et al.	
2005/0203416	A1	9/2005	Angelsen et al.	
2006/0030797	A1	2/2006	Zhou et al.	
2006/0173348	A1	8/2006	Wilser et al.	
2007/0038114	A1	2/2007	Couvillon, Jr.	
2007/0149917	A1	6/2007	Bennett et al.	
2007/0167813	A1*	7/2007	Lee	A61B 8/12 600/459
2007/0167821	A1	7/2007	Lee et al.	
2008/0097403	A1	4/2008	Donaldson et al.	
2008/0177138	A1	7/2008	Courtney et al.	
2008/0221506	A1	9/2008	Rodriguez et al.	
2008/0234716	A1	9/2008	Kiester	
2008/0312536	A1*	12/2008	Dala-Krishna	A61B 8/12 600/459
2009/0088631	A1	4/2009	Dietz et al.	
2009/0306518	A1	12/2009	Kurse et al.	
2010/0036258	A1	2/2010	Dietz et al.	
2010/0145310	A1	6/2010	Lee et al.	
2010/0160788	A1	6/2010	Davies et al.	
2010/0179426	A1	7/2010	Davies et al.	
2010/0234736	A1	9/2010	Corl	
2010/0249601	A1	9/2010	Courtney	
2010/0249602	A1	9/2010	Buckley et al.	
2010/0249604	A1	9/2010	Hastings et al.	
2011/0021924	A1	1/2011	Sethuraman et al.	
2011/0071401	A1	3/2011	Hastings et al.	
2011/0196286	A1	8/2011	Robertson et al.	
2011/0237955	A1	9/2011	Dietz et al.	
2011/0263986	A1	10/2011	Park et al.	
2011/0301508	A1	12/2011	Sethuraman et al.	
2012/0108980	A1	5/2012	Shilling et al.	
2012/0172698	A1	7/2012	Teo et al.	

FOREIGN PATENT DOCUMENTS

JP	10-262974	A	10/1998	
JP	1998-262974	A *	10/1998	A61B 8/12
JP	2000-126184	A	5/2000	
JP	2001-046375	A *	2/2001	A61B 8/12
JP	2004/129697		4/2004	
JP	2007-267998	A	10/2007	
WO	WO 2012/061643	A1	5/2012	

OTHER PUBLICATIONS

International Search Report and Written Opinion issued in PCT/US2013/064579, dated Jan. 23, 2014.

International Search Report and Written Opinion issued in PCT/US2013/064606, mailed Jan. 8, 2014.

International Search Report and Written Opinion issued in PCT/US2013/064611, dated Jan. 28, 2014.

International Search Report and Written Opinion issued in PCT/US2013/064618, dated Jan. 24, 2014.

International Search Report and Written Opinion issued in PCT/US2013/078245, dated Apr. 25, 2014.

International Search Report and Written Opinion issued in PCT/US2014/023088, dated Aug. 18, 2014, 14 pgs.

International Search Report and Written Opinion issued in PCT/US2014/023092, dated Aug. 12, 2014, 16 pgs.

* cited by examiner

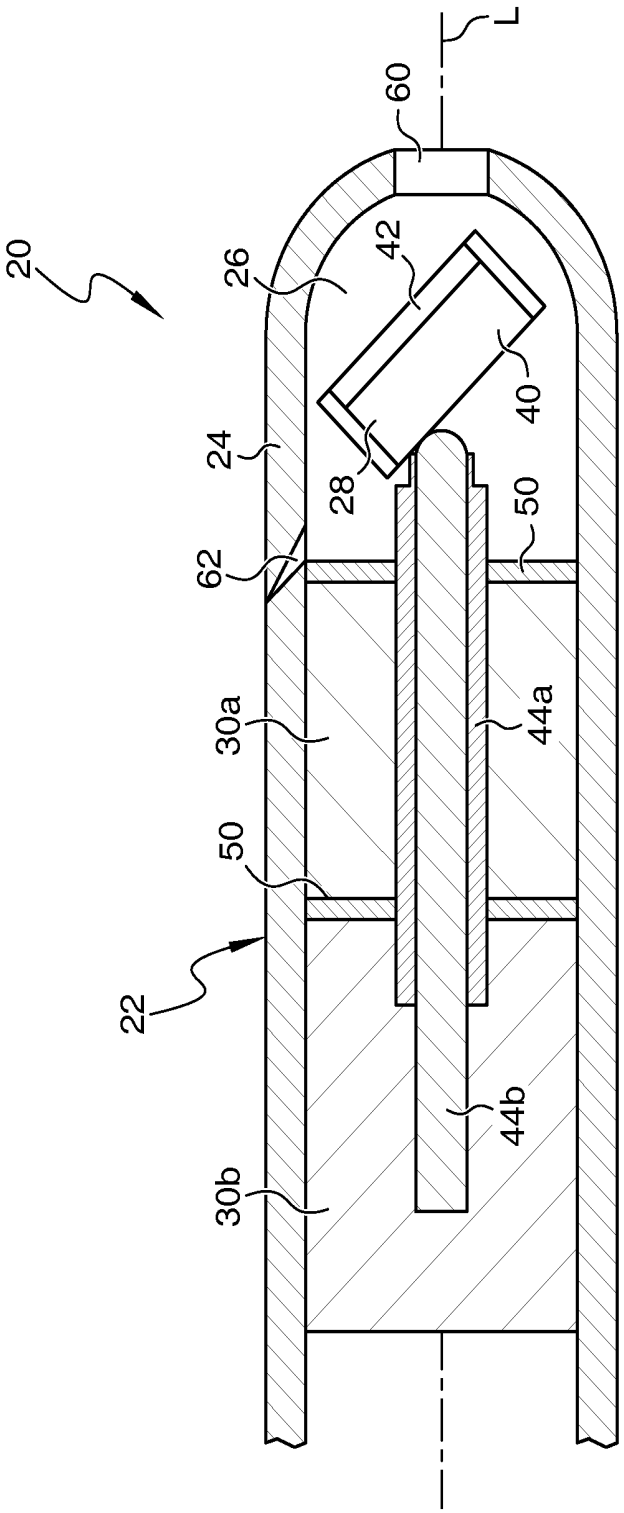

FIG. 1

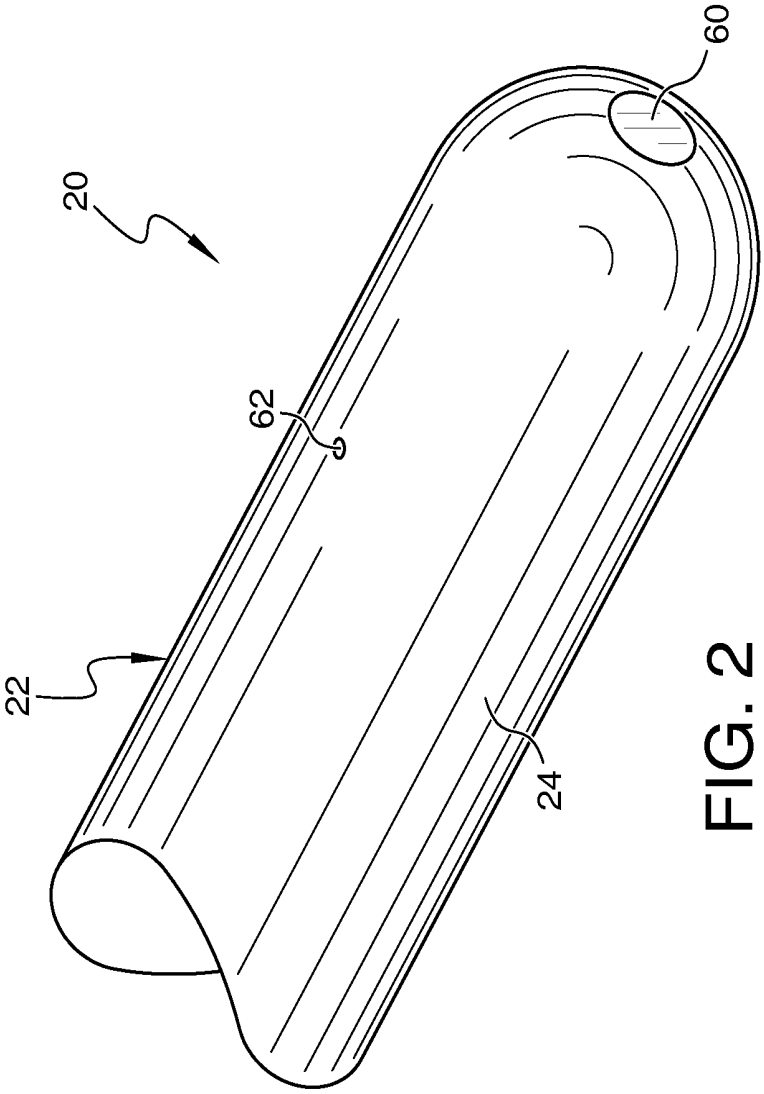

FIG. 2

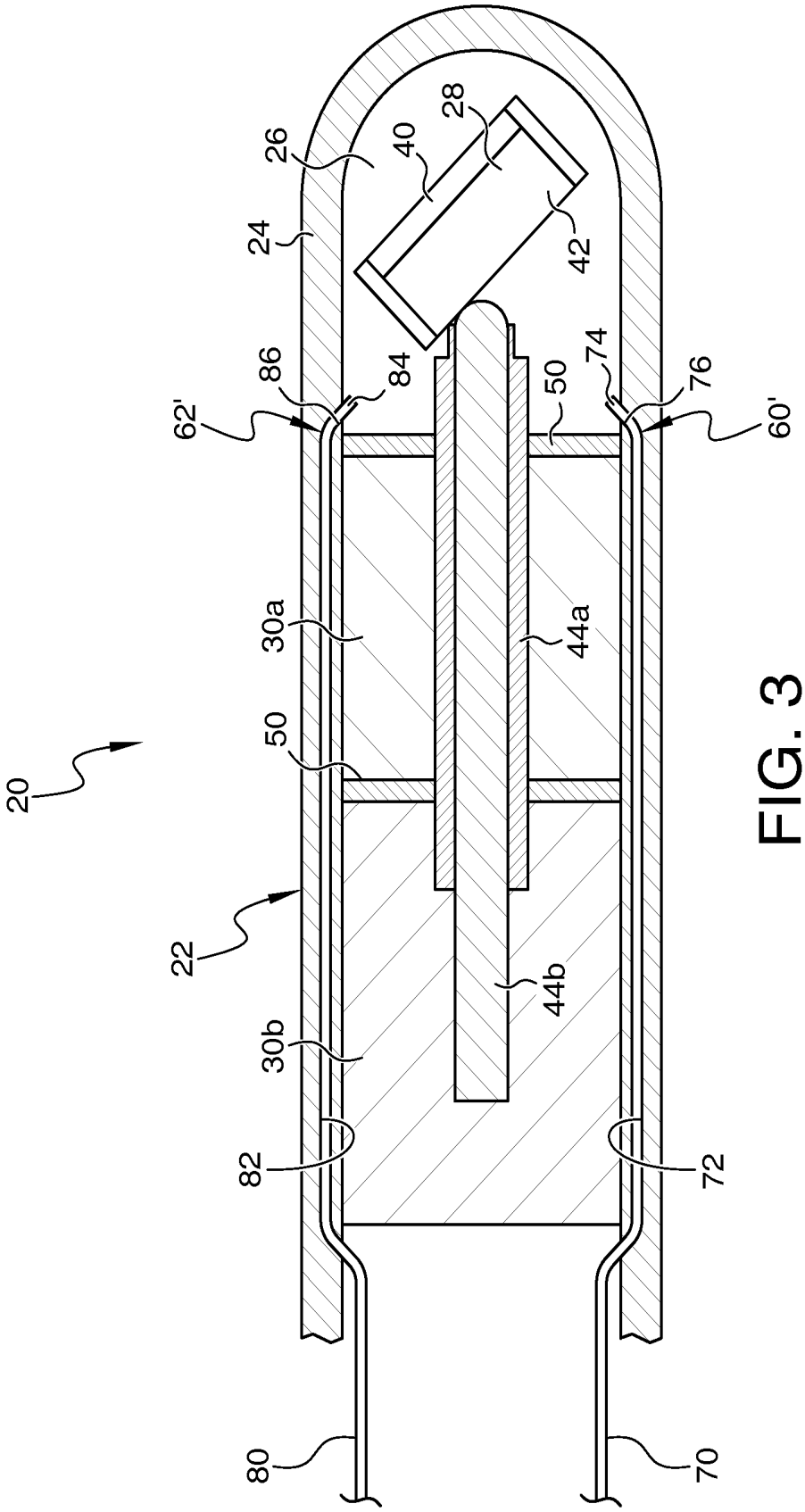
20
22
24
26
28
40
42
44a
44b
50
50
62'
60'
70
72
74
76
80
82
84
86
30a
30b

FIG. 3

INTERNAL ULTRASOUND ASSEMBLY WITH PORT FOR FLUID INJECTION

This application claims the benefit of U.S. Provisional Application Ser. No. 61/787,768, filed on Mar. 15, 2013, which is incorporated herein by reference in its entirety.

The present disclosure relates to structure and methods in medical uses of ultrasound. In particular, this disclosure relates to preparation of medical ultrasound devices.

BACKGROUND

In using ultrasound for imaging, therapy or other medical uses, ultrasound energy or waves are transmitted through a medium and can reflect, scatter or otherwise attenuate when they reach a surface or border having a significant difference in acoustic impedance. For example, in ultrasound imaging of the human body, ultrasound waves may be applied externally (e.g. by placing a transducer on the skin) or internally (e.g. by placing a transducer within a vessel or organ), and travel through the body's internal fluids, which is a large proportion of water. When the waves strike a bone, organ or other body portion that provides an acoustic interface—i.e., a border of two significantly different acoustic impedances—then the waves are reflected or otherwise attenuated. A transducer (which may be the same transducer that supplied the ultrasound waves or another) receives the reflected or attenuated waves, and an image of a portion of the body can be generated.

An external transducer is placed against the skin with a gel useful as a coupling medium so that little or no reflection or other attenuation from the boundary between the air over the patient and the skin occurs. When a transducer is placed within the body, commonly it is inside a protective envelope, such as a tube, catheter or similar housing or enclosure. The material of such an envelope may be selected for its similarity in acoustic impedance to that of bodily fluids, so that there is little or no attenuation as ultrasound waves travel from that material to the fluids or tissues of the body. The inner pocket or volume of the body within which the transducer is placed needs a coupling medium having an acoustic impedance similar to that of the envelope material and the body's fluids, to allow maximum transmission. Without such a medium, e.g. if the inside of the body simply includes air or another gas, significant reflection or other attenuation will occur when the ultrasound energy from the transducer hits the boundary where the gas meets the material of the envelope. Suitable coupling media include biocompatible fluids such as saline, oils such as mineral oil or castor oil, alcohols, and other fluids.

Of course, some coupling media (e.g. saline) can be corrosive over time, particularly of metallic materials. If a corrosive coupling medium is to be used, a drawback is that degradation of part(s) of the transducer or other aspects of the device (e.g. structure used to turn or move the transducer) may occur. An unacceptably short shelf life for the product may thus result with such media. Thus, the relatively low-cost medium of saline has significant downside to a practical internal transducer product.

Embodiments of internal transducer products using piezoelectric motors to turn or otherwise move a transducer have also been suggested. Applicable piezoelectric motors generally need dry conditions to operate, as they require a high friction contact area between a stator and a clutch. If fluid touches that contact area or interface, the friction will be substantially reduced, thereby also reducing the torque output of the motor Accordingly, in such embodiments to

prevent fluid from contacting the motor a seal is included between the motor and the transducer, to prevent leakage of the coupling medium from the volume around the transducer toward the motor. Such seals can fail over time, which is one potential factor in shelf life for such products.

SUMMARY

Among other things, there are shown embodiments of apparatus for ultrasound procedures that include a transducer for emitting and/or receiving ultrasound signals, the transducer being within a sealed chamber that is defined at least partially by a wall forming an acoustic window for transmission of ultrasound signals. An injection port communicates with the chamber through which coupling media is inserted into the chamber, and an exhaust port communicates with the chamber through which gas within the chamber is exhausted from the chamber when coupling media is inserted into the chamber.

In particular examples, the injection port includes a flexible insert fixed with respect to the wall, the insert permitting insertion of a needle through it and thereafter providing an airtight seal when a needle is removed from it. Such an insert may be placed at a forward-most tip of the chamber. In other examples, the chamber is attached to or part of an elongated tubular housing having an internal surface and an external surface, and the injection port includes a lumen opening into the chamber and extending through at least part of the housing between the internal surface and the external surface. At least part of the lumen may be within a tube separate from the housing. The lumen can open into the chamber at a rearward-most portion of the chamber.

Embodiments are disclosed in which the exhaust port includes a valve fixed with respect to the wall. The valve may be placed in the wall at a rearward-most portion of the chamber. Other embodiments may have the chamber attached to or part of an elongated tubular housing having an internal surface and an external surface, with the exhaust port including a lumen opening into the chamber and extending through at least part of the housing between the internal surface and the external surface. For example, at least part of the lumen may be within a tube separate from the housing. The lumen can open into the chamber at a rearward-most portion of the chamber.

Such devices can include a motor (one or more) operatively connected to the transducer, and a seal between the motor and the transducer and fixed to the wall, the seal defining a rearward boundary of the chamber. Particular examples have the injection port located opposite and facing the seal. Other examples have one or both of the injection port and exhaust port located adjacent the seal. Embodiments in which the injection port and the exhaust port are located diametrically opposed from each other are also shown.

Methods for preparing and using devices for ultrasound procedures are also disclosed. For example, such methods can include injecting a coupling media into a sealed chamber, the chamber defined at least partially by a wall forming an acoustic window for transmission of ultrasound signals, and the chamber having within it a transducer for emitting and/or receiving ultrasound signals. The injecting can include moving the coupling media through an injection port that communicates with the chamber, and during the injecting, gas within the chamber prior to the injecting is forced out of the chamber through an exhaust port. The injecting can continue until a sufficient amount of coupling medium is injected, e.g. the coupling medium displaces substantially

all of the gas. Particular examples of the injecting include inserting a needle through the injection port and passing the coupling medium through the needle and into the chamber. Other examples of the injecting include passing the coupling medium through a lumen in a tube, at least part of the tube being within a housing of the device. In embodiments in which the exhaust port includes a valve, during the injecting gas within the chamber prior to the injecting may be forced out of the chamber and exterior of the device through the valve. Where the exhaust port includes a lumen in a tube, at least part of the tube being within a housing of the device, during the injecting gas within the chamber prior to the injecting may be forced out of the chamber through at least part of the lumen.

These and other embodiments are discussed further below.

BRIEF DESCRIPTION OF THE DRAWINGS

FIG. **1** is a part cross-sectional view of an embodiment of a device for use in ultrasound procedures.

FIG. **2** is a partial perspective view of the embodiment of FIG. **1**.

FIG. **3** is a part cross-sectional view of an embodiment of a device for use in ultrasound procedures.

DETAILED DESCRIPTION OF THE ILLUSTRATED EMBODIMENTS

For the purposes of promoting an understanding of the principles of the disclosure, reference will now be made to the embodiments illustrated in the drawings and specific language will be used to describe the same. It will nevertheless be understood that no limitation of the scope of the claims is thereby intended, such alterations and further modifications in the illustrated embodiments, and such further applications of the principles of the disclosure as illustrated therein being contemplated as would normally occur to one skilled in the art to which the disclosure relates.

Referring now generally to the drawings, there is shown an embodiment of a device **20** for application of ultrasound internally to a patient. As particular examples, device **20** is or is part of a device or system for imaging, such as for intravascular ultrasound (IVUS) imaging. Other embodiments can include devices for therapeutic or diagnostic uses within the body, or for ultrasound devices used outside of the body. In the embodiment indicated schematically in FIG. **1**, device **20** is a catheter or other flexible elongated or tubular housing or member **22** having an application end with a wall **24** defining an internal chamber **26**, with catheter **22** being sized and configured in a particular example for insertion into and/or travel along the vascular system. Within catheter **22** and chamber **26** in this embodiment is a transducer **28** for sending and/or receiving ultrasound signals. In particular embodiments, one motor **30** may be provided, connected directly or indirectly to transducer **28** so as to turn transducer **28** around a longitudinal axis of device **20**, pivot transducer **28** around an axis substantially perpendicular to that longitudinal axis, and/or provide other motions to transducer **28**. As discussed further below, one or more motors **30** (e.g. two motors **30***a* and **30***b* indicated in the illustrated embodiments) may be provided within catheter or housing **22** and are connected directly or indirectly to transducer **28** so as to turn transducer **28** around a longitudinal axis of device **20**, pivot transducer **28** around an axis substantially perpendicular to that longitudinal axis, and/or provide other motions to transducer **28**.

Catheter **22** in the illustrated embodiment is an elongated device of plastic or other sturdy flexible material that is substantially transparent to or presenting a minimal barrier to passage of ultrasound signals. For example, when used within a blood vessel containing body tissues and blood, it is preferable for catheter **22** (or at least some or all of wall **24**) to be constructed of a material which has an acoustic impedance similar to that of body fluids such as blood. Possible materials could include, for example, a polymer material such as high density polyethylene (HDPE), polymethylpentene (PMP), or acrylonitrile butadiene styrene (ABS). It has been determined that a preferred thickness of at least the portion of catheter **22** which serves as the viewing window is approximately ½ of the wavelength corresponding to center frequency.

Wall **24** surrounds chamber **26**, which is at the distal end of device **20** in the illustrated embodiment, and extends proximally. Wall **24** is a monolithic part of a catheter **22** in some embodiments, and in others wall **24** is at the application end surrounding all or part of chamber **26**. Wall **24** may extend toward the control end of device **20** beyond chamber **26** in some examples. The proximal end of wall **24** and/or catheter **22** may extend outside of the patient during use, and the control end may include a handle or other operating portion (e.g. an imaging system and/or a maneuvering system (not shown)). Particular embodiments of catheter **22** or at least chamber **26** are cylindrical, and are sized for insertion into and passage through blood vessels, such as insertion into the femoral artery and passage through it toward the heart.

Transducer **28** is indicated schematically in the drawings. The term "transducer" should be understood to include an assembly of two or more parts as well as a single piece. For instance, transducer **28** can include a body or backing **40** with a transducer element **42** attached to one side of body **40**, and a matching layer (not shown) attached to one side of element **42**. The matching layer is attached to one side of element **42** and may be focused or non-focused. The matching layer has acoustic impedance generally between that of element **42** and the medium surrounding transducer **28** in order to minimize mismatched acoustic impedance between transducer **28** and the medium surrounding transducer **28** (e.g. mineral oil). In some embodiments, transducer **28** includes an element **42** and matching layer but no body **40**. In this embodiment, transducer **28** is pivotable and/or rotatable through action or influence of motor **30**, so that with element **42** on the side of body **40** as indicated, a generally lateral (i.e. away from the longitudinal axis) and forward ultrasound beam direction is possible depending on the motion of transducer **28**. Embodiments of transducer **28** may be capable in particular examples of sending and receiving ultrasound waves in a range of frequencies which are typically used in medical ultrasound procedures, such as, for example, in the range from 2 MHz to 50 MHz.

Transducer **28** is electronically connected to a power source and to an imaging system (not shown). Examples of connections include conductors (e.g. wires or cables) along wall **24**, through a central lumen of a motor shaft, via slip ring connections, and/or via metallic film(s) along wall **24**. Transducer **28** may be mounted in a pivoting mechanism or otherwise linked to motor **30** or a shaft **44** (which rotates, travels longitudinally, or otherwise moves) to permit transducer **28** to turn, pivot, or otherwise move. Embodiments of such examples are discussed and shown in Application Ser. Nos. 61/713,135; 61/713,172; 61/714,275; and 61/748,773, all of which are incorporated by reference in their entireties.

Motor **30** may be a rotary or linear motor and includes a shaft **44** for connecting or linking to transducer **28** or a mechanism connected to it. In the illustrated embodiments, a rotary motor **30***a* and a linear motor **30***b* are provided, with respective shafts **44***a* and **44***b*. Motor **30***a* turns hollow shaft **44***a* about a longitudinal axis L of device **20**, and shaft **44***a* is linked to transducer **28** as schematically indicated so that transducer **28** likewise turns around axis L. Motor **30***b* moves shaft **44***b* forward and backward along axis L and through shaft **44***a* in this example, with shaft **44***b* engaging or linked (not visible in FIG. **1**) to transducer **28** off-center. Forward motion of **44***b* tends to pivot transducer **28** clockwise about an axis into the page (perpendicular to axis L), and rearward motion of shaft **44***b* tends to pivot or allow pivoting of transducer **28** counterclockwise around an axis into the page.

Embodiments of piezoelectric or electromagnetic micromotors of a size and configuration suitable for containment within catheter **22** may be used. For example, a particular embodiment of a rotary motor (e.g. motor **30***a*) is a two-phase, coreless, brushless DC electromagnetic motor, which has few components, small size and minimal complexity. A piezoelectric micromotor is of a small size, such as having a diameter in the range from 0.3 mm to 4 mm in particular embodiments, and can exhibit a high torque-to-size ratio. An example of a linear motor (e.g. motor **30***b*) is an electromagnetic motor similar to a voice coil, used extensively for loudspeakers, which operate by creating a high static magnetic flux (e.g. by a permanent magnet) in the lateral direction (e.g. perpendicular to the longitudinal axis of the motor). An electrically conductive coil is placed through this flux and when current is applied to the coil a force in the axial direction is created, pulling or pushing shaft **44***b*.

One or more seals **50** may be provided. For example, respective seal(s) **50** are provided in this embodiment forward of motor(s) **30** (e.g. engaging or adjacent to the forward-most part of each of motors **30***a* and **30***b* in the illustrated embodiment) to separate chamber **26** from motor **30**. Seal **50** in the illustrated embodiment is a wall or membrane that extends across the entire diameter or width of the space within wall **24**, e.g. chamber **26**. Seal **50** may be unitary, formed with wall **24** and of the same material as wall **24**, or may be separately formed and inserted into and joined with the inside of wall **24**. As indicated in the drawings, one or more shafts (e.g. shafts **44***a* and/or **44***b*, associated with motors **30***a* and/or **30***b*) extend through seal **50** in order to link or connect to transducer **28**. In such embodiments, a seal **50** thus provides not only a general wall bounding chamber **26**, but seal(s) **50** also inhibit or prevent flow of fluid out of chamber **26** and/or around shaft(s) **44** extending through seal(s) **50**. Particular configurations and examples of seals are shown in Application Ser. No. 61/787,357, entitled "Internal Ultrasound Assembly Fluid Seal" and filed on Mar. 15, 2013, which is incorporated herein by reference in its entirety.

Wall **24** in the illustrated embodiments includes features to permit easy and effective injection of a coupling medium into chamber **26**. In the embodiment shown in FIGS. **1-2**, an injection port **60** is provided in a portion of wall **24**, as is an exhaust port **62**. Injection port **60** in this embodiment is an insert sealingly fitted into wall **24**, i.e. the insert is fitted in wall **24** so that any border between them is at least substantially leak-tight. The insert in particular embodiments has self-sealing properties. In other embodiments, injection port **60** may be formed in or along with wall **24**, or if wall **24** is made of a suitable material, injection port **60** may simply be a portion (or any portion) of wall **24** surrounding chamber **26**. The material of injection port **60** in particular examples is a natural or synthetic rubber or rubber-like material, which is easily pierced by a thin needle and which, when the needle is removed, resiliently closes or collapses the hole made by the needle so as to provide a leak-tight seal. Other materials may be used, beyond those that can be pierced by a needle and self-seal. The example of port **60** as shown is substantially disc-shaped and is fixed in wall **24**. In particular embodiments, port **60** is at least substantially immobile in rotation and/or in translation with respect to wall **24** once placed. Turning or removing such a port may have deleterious effects on the surrounding wall **24** or other parts of device **20**.

Injection port **60** is shown in the illustrated example at the forward-most point (i.e. the insertion end) of device **20**. Such placement has the advantage, in devices in which transducer **20** is both rotatable around axis L and pivotable around an axis perpendicular to axis L, of locating injection port **60** in an area of lesser or least interference with visualization or other application of ultrasound waves from transducer **28**. Placement of injection port **60** in a side portion of wall **24** (lateral of axis L) would locate it more directly in the sweep path of ultrasound energy traveling to and/or from transducer **28**, generating a side blind spot. Thus, in particular embodiments injection port **60** is at a location not faced by the transducer, where such location is possible.

Exhaust port **62** in this embodiment is a valve fitted or placed in wall **24** in fluid communication with chamber **26**. As with injection port **60**, exhaust port **62** may be an insert (e.g. a valve) sealingly fitted into wall **24**, i.e. the valve or other insert is fitted in wall **24** so that any border between them is at least substantially leak-tight. In other embodiments, exhaust port **62** may be formed in or along with wall **24** (e.g. a conical or otherwise narrowing passage through wall **24**, having its narrowest point at the exterior of wall **24**). In such an embodiment, a valve may also be placed in or along the passage, such as at or adjacent the location where port **62** meets chamber **26**, or at or adjacent the location where port **62** meets the exterior of wall **24**. Exhaust port **62** preferably allows gas to move from chamber **26** through port **62** to the outside of device **20** during filling or charging of chamber **26** with coupling medium, but to seal against entrance of gases or liquids from the outside into chamber **26**. Exhaust port **62** is shown in the illustrated example at a rearward-most point of chamber **26**, i.e. adjacent to seal **50**, and in this embodiment substantially opposite to the placement of injection port **60**. As with the placement of injection port **60**, such placement locates exhaust port **62** in an area of lesser or least interference with visualization or other application of ultrasound waves from transducer **28**, avoiding a side blind spot toward the middle of the acoustic window of wall **24** around chamber **26**. In particular embodiments, exhaust port **62** is at a location not faced by the transducer, where such location is possible. It will also be noted that in embodiments in which motor(s) **30** are electromagnetic motors and the coupling medium chosen does not adversely affect such a motor, exhaust port **62** may be placed through seal **50** or in a similar location to exhaust gas and any fluid that may escape from port **62** through seal **50** and/or the motor(s). As noted previously, if any motor **30** is piezoelectric, exhaust port **62** should ensure that exhaust gas and escaping fluid is routed around or away from the motor.

In use, this embodiment of device **20** is charged or injected with a coupling medium prior to initial insertion into the body. An appropriate coupling medium is selected,

such as saline, oils, alcohols or other appropriate acoustic coupling fluids. The coupling medium is loaded into a syringe with a needle (not shown) or other appropriate injection device. Using the syringe with needle as a particular example, the needle is inserted through injection port **60**, so that the open tip of the needle is within chamber **26**. The coupling medium is then forced through the needle and into chamber **26**, as by pressing a syringe plunger. As the coupling medium enters chamber **26**, it increases the pressure on the gas (e.g. air) within chamber **26**. The increased pressure forces the gas out of chamber **26** through exhaust port **62**. Injection of coupling medium continues until chamber **26** is filled to a satisfactory degree, for example when a maximum amount of the gas previously in chamber **26** has been replaced with coupling medium. An optimum result would be to have the entire chamber **26** filled with coupling medium, so that no visible gas pockets or bubbles are present, as gas pockets or bubbles have an acoustic impedance significantly different from the coupling medium, and thus can reflect or otherwise attenuate ultrasound waves.

It is generally desirable to limit or eliminate the opportunity for gas pockets to form within chamber **26**. Accordingly, in one example, during the injecting, the user may have device **20** oriented so that exhaust port **62** points generally upward, so that it is at or near the vertically highest location of wall **24**. With that orientation, coupling medium will generally pool away from exhaust port **62**, naturally maintaining gas within chamber **26** between the pool of coupling medium and exhaust port **62**. In another example, some or substantially all of gas within chamber **26** may be removed prior to injection of coupling medium, as by evacuating through application of vacuum directly or indirectly to port **62**. Little or no gas remains to be evacuated via the pressure of the coupling medium.

Once charged with coupling medium, device **20** is inserted into the patient, for example into the patient's vascular system, and is maneuvered to the desired location. The desired therapeutic, diagnostic, imaging or other ultrasound procedure is performed, and the device can be removed. Having injected the coupling medium shortly or immediately prior to use of device **20**, the chance of improper operation of device **20** due to corrosion of parts by the coupling medium or seepage through seals is minimized.

In another example, indicated schematically in FIG. **3**, injection port **60'** and exhaust port **62'**, each in fluid communication with chamber **26**, are shown as respective lumens traveling along at least a portion of device **20**, and having respective openings in chamber **26**. For instance, injection port **60'** may be or include a tube **70** having a lumen **72** therethrough and a forward end opening **74** that communicates with chamber **26**. In this example, a portion of tube **70** is within wall **24** around seal **50** and motor(s) **30**, and tube **70** can travel within or along (e.g. fixed to) the interior surface of catheter **22** when between motor(s) **30** and the handle or operating end (not shown) of device **20**. It will be understood that in other embodiments a tube **70** may extend from the handle or operating end (or from a location between the handle or operating end and motor(s) **30**) to a lumen formed in wall **24**, with such lumen extending through wall **24** outside of motor(s) **30** and opening into chamber **26**. Further, embodiments in which tube **70** is part or all of a lumen of or within catheter **22** (e.g. a dedicated lumen of catheter **22**, or a lumen extending within the wall of catheter **22** to a location at or near the operating end) are also contemplated. One or more valves **76** may be placed in or over tube **70**, e.g. at the interface between tube **70** and chamber **26**, to allow fluid to enter chamber **26** from tube **70** but not to escape chamber **26** into tube **70**.

In a similar fashion, this embodiment of exhaust port **62'** may be or include a tube **80** having a lumen **82** therethrough and a forward end opening **84** that communicates with chamber **26**. In this example, a portion of tube **80** is within wall **24** around seal **50** and motor(s) **30**, and tube **80** can travel within or along (e.g. fixed to) the interior surface of catheter **22** when between motor(s) **30** and the handle or operating end (not shown) of device **20**. In some embodiments, a tube **80** may extend from the handle or operating end (or from a location between the handle or operating end and motor(s) **30**) to a lumen **82** which extends through wall **24** outside of motor(s) **30** and opens into chamber **26**, as noted above with respect to injection port **60'**. Further, embodiments in which tube **80** is part or all of a lumen of or within catheter **22** (e.g. a dedicated lumen of catheter **22**, or a lumen extending within the wall of catheter **22** to a location at or near the operating end) are also contemplated. As indicated in FIG. **3**, a particular embodiment has injection port **60'** and exhaust port **62'** diametrically opposed to each other in device **20**. One or more valves **86** may be placed in or over tube **80**, e.g. at the interface between tube **80** and chamber **26**, so as to permit exit of gas and/or liquid from chamber **26** into tube **80**, and to prevent re-entry of gas or liquid into chamber **26** from tube **80**.

One or both of ports **60'** and **62'** may be located similarly to the placement of exhaust port **62**, such as at a rearwardmost portion of chamber **26**. Such placement locates port(s) **60'** and/or **62'** in an area of lesser or least interference with visualization or other application of ultrasound waves from transducer **28**. In particular embodiments, one or both of injection port **60'** and exhaust port **62** are at a location not faced by the transducer, where such location is possible.

Charging this embodiment of device **20** with a coupling medium can occur prior to initial insertion into the body, or at any time after device **20** is within the body. Once an appropriate coupling medium is selected, a supply of it (e.g. in a syringe (not shown) or other appropriate supply device) is connected to tube **70**. In embodiments in which tube **70** extends out to a handle or operating portion (not shown) of device **20**, the syringe or other supply may be connected to tube **70** in or adjacent to such operating portion. The coupling medium is forced through tube **70** and lumen **72** into chamber **26**, as by pressing a syringe plunger or operating a pump. As the coupling medium enters chamber **26**, it increases the pressure on the gas (e.g. air) within chamber **26**. The increased pressure forces the gas out of chamber **26** through exhaust port **62'**, e.g. through opening **84** and into lumen **82** of tube **80**. Injection of coupling medium continues until chamber **26** is filled to a satisfactory and/or optimum degree, as described above. As previously noted, as a way to help limit or eliminate the opportunity for gas pockets to form within chamber **26**, during the injecting the user may have device **20** oriented (to the extent practical in a given situation) with exhaust port **62'**, and particularly opening **84**, generally upward, so that it is at or near the vertically highest location of wall **24**. With that orientation, coupling medium will generally pool away from opening **84**, naturally maintaining gas within chamber **26** between the pool of coupling medium and opening. In some embodiments, gas from the chamber can be evacuated prior to insertion or injection of coupling medium, rather than by the pressure of the applied coupling medium. For example, a source of vacuum can be applied to tube **80**, to withdraw gas through port **62'**, and then coupling medium can be added to chamber **26** via tube **70**.

Once charged with coupling medium, device **20** is inserted into the patient, for example into the patient's vascular system, and is maneuvered to the desired location. The desired therapeutic, diagnostic, imaging or other ultrasound procedure is performed, and the device can be removed. Having injected the coupling medium shortly or immediately prior to use of device **20**, the chance of improper operation of device **20** due to corrosion of parts by the coupling medium or seepage through seals is minimized.

The arrangement of ports **60**, **62** does not require as much space in the wall or around the motor(s) **30**, as is needed for the placement of tubes **70**, **80** of ports **60'**, **62'**. Such space considerations can be quite important for uses of ultrasound in small areas, such as cardiovascular (e.g. peripheral vascular) applications. As will be appreciated, ports **60'**, **62'** provide the ability to charge chamber **26** with coupling medium in situ, rather than charging and then inserting device **20**. Confirmation of the orientation of a device **20** with ports **60'**, **62'** may be necessary if it is desired to maintain port **62'** in an upward location during charging.

It will be understood that parts of the embodiments noted above can be interchanged with each other. For example, an embodiment of device **20** could include an injection port **60** and an exhaust port **62'**, or an embodiment of device **20** could include an injection port **60'** and an exhaust port **62**.

While the embodiments have been illustrated and described in detail in the drawings and foregoing description, the same is to be considered as illustrative and not restrictive in character, it being understood that only particular embodiments have been shown and described and that all changes and modifications that come within the spirit of the disclosure are desired to be protected. It will be understood that features or attributes noted with respect to one or more specific embodiments may be used or incorporated into other embodiments of the structures and methods disclosed.

What is claimed is:

1. An apparatus for ultrasound procedures, comprising:

a transducer for emitting and/or receiving ultrasound signals, the transducer being within a chamber, the chamber defined at least partially by a wall forming an acoustic window for transmission of ultrasound signals;

an injection port extending through the wall forming an acoustic window and communicating with the chamber adapted for passing coupling media through and into the chamber; and

an exhaust port extending through the wall forming an acoustic window and communicating with the chamber through which gas within the chamber can be exhausted from the chamber when coupling media is inserted into the chamber, and

wherein the chamber is attached to or part of an elongated tubular housing having an internal surface and an external surface, and wherein the injection port comprises a lumen opening into the chamber and extending through at least part of the housing between the internal surface and the external surface.

2. The apparatus of claim **1**, wherein the injection port comprises a flexible insert fixed with respect to the wall, the insert permitting insertion of a needle through it and thereafter providing a leak-tight seal when the needle is removed from it.

3. The apparatus of claim **2**, wherein the insert is placed at a forward-most tip of the chamber.

4. The apparatus of claim **1**, wherein at least part of the lumen is within a tube separate from the housing.

5. The apparatus of claim **1**, wherein the lumen opens into the chamber at a location not faced by the transducer.

6. The apparatus of claim **1**, wherein the exhaust port comprises a valve fixed with respect to the wall.

7. The apparatus of claim **6**, wherein the valve is placed in the wall at a location not faced by the transducer.

8. The apparatus of claim **1**, further comprising a motor operatively connected to the transducer, and a seal between the motor and the transducer and fixed to the wall, the seal defining a rearward boundary of the chamber.

9. The apparatus of claim **8**, wherein the injection port is located opposite and facing the seal.

10. The apparatus of claim **8**, wherein the injection port is located adjacent the seal.

11. The apparatus of claim **8**, wherein the exhaust port is located adjacent the seal.

12. The apparatus of claim **8**, wherein the injection port and the exhaust port are located diametrically opposed from each other.

13. The apparatus of claim **1**, wherein the exhaust port comprises a lumen opening into the chamber and extending through at least part of the housing between the internal surface and the external surface.

14. The apparatus of claim **13**, wherein at least part of the exhaust port lumen is within a tube separate from the housing.

15. The apparatus of claim **13**, wherein the exhaust port lumen opens into the chamber at a location not faced by the transducer.

16. An apparatus for ultrasound procedures, comprising:

a transducer for emitting and/or receiving ultrasound signals, the transducer being within a chamber, the chamber defined at least partially by a wall forming an acoustic window for transmission of ultrasound signals;

an injection port extending through the wall forming an acoustic window and communicating with the chamber adapted for passing coupling media through and into the chamber; and

an exhaust port extending through the wall forming au acoustic window and communicating with the chamber through which gas within the chamber can be exhausted from the chamber when coupling media is inserted into the chamber, and

wherein the chamber is attached to or part of an elongated tubular housing having an internal surface and an external surface, and wherein the exhaust port comprises a lumen opening into the chamber and extending through at least part of the housing between the internal surface and the external surface.

17. The apparatus of claim **16**, wherein at least part of the lumen is within a tube separate from the housing.

18. The apparatus of claim **16**, wherein the lumen opens into the chamber at a location not faced by the transducer.

19. The apparatus of claim **16**, wherein the injection port comprises a flexible insert fixed with respect to the wall, the insert permitting insertion of a needle through it and thereafter providing a leak-tight seal when the needle is removed from it.

20. The apparatus of claim **19**, wherein the insert is placed at a forward-most tip of the chamber.

21. The apparatus of claim **16**, wherein the injection port comprises a lumen opening into the chamber and extending through at least part of the housing between the internal surface and the external surface.

22. The apparatus of claim **21**, wherein at least part of the lumen is within a tube separate from the housing.

23. The apparatus of claim **21**, wherein the lumen opens into the chamber at a location not faced by the transducer.

24. The apparatus of claim **16**, wherein the exhaust port comprises a valve fixed with respect to the wall.

25. The apparatus of claim **24**, wherein the valve is placed in the wall at a location not faced by the transducer.

26. The apparatus of claim **16**, further comprising a motor operatively connected to the transducer, and a seal between the motor and the transducer and fixed to the wall, the seal defining a rearward boundary of the chamber.

27. The apparatus of claim **26**, wherein the injection port is located opposite and facing the seal.

28. The apparatus of claim **26**, wherein the injection port is located adjacent the seal.

29. The apparatus of claim **26**, wherein the exhaust port is located adjacent the seal.

30. The apparatus of claim **26**, wherein the injection port and the exhaust port are located diametrically opposed from each other.

31. A method of preparing a device for ultrasound procedures, comprising:

injecting a coupling medium into a sealed chamber, the chamber defined at least partially by a wall forming an acoustic window for transmission of ultrasound signals, the chamber having within it a transducer for emitting and/or receiving ultrasound signals, the chamber having an exhaust port extending through the wall forming an acoustic window and in fluid communication with the chamber through which gas within the chamber can be evacuated, and

wherein the injecting includes moving the coupling medium through an injection port extending through the wall forming an acoustic window that communicates with the chamber, and wherein the injecting includes passing the coupling medium through a lumen in a tube, at least part of the tube being within a housing of the device.

32. The method of claim **31**, wherein during the injecting, gas within the chamber prior to the injecting is forced out of the chamber through the exhaust port.

33. The method of claim **31**, including evacuating gas through the exhaust port from within the chamber prior to injecting medium into the chamber.

34. The method of claim **31**, wherein the injecting continues until the coupling medium displaces substantially all of the gas.

35. The method of claim **31**, wherein the injecting includes inserting a needle through the injection port and passing the coupling medium through the needle and into the chamber.

36. The method of claim **31**, wherein the exhaust port includes a valve, so that during the injecting, gas within the chamber prior to the injecting is forced out of the chamber and exterior of the device through the valve.

37. A method of preparing a device for ultrasound procedures, comprising:

injecting a coupling medium into a sealed chamber, the chamber defined at least partially by a wall forming an acoustic window for transmission of ultrasound signals, the chamber having within it a transducer for emitting and/or receiving ultrasound signals, the chamber having an exhaust port extending through the wall forming an acoustic window and in fluid communication with the chamber through which gas within the chamber can be evacuated, and

wherein the injecting includes moving the coupling medium through an injection port extending through the wall forming an acoustic window that communicates with the chamber, wherein the exhaust port includes a lumen in a tube, at least part of the tube being within a housing of the device, wherein during the injecting, gas within the chamber prior to the injecting is forced out of the chamber through at least part of the lumen.

38. The method of claim **37**, wherein the injecting includes passing the coupling medium through the lumen in the tube, at least part of the tube being within the housing of the device.

39. The method of claim **37**, wherein the exhaust port includes a valve, so that during the injecting, gas within the chamber prior to the injecting is forced out of the chamber and exterior of the device through the valve.

* * * * *

专利名称(译)	内部超声波组件带有用于注入流体的端口		
公开(公告)号	US9675323	公开(公告)日	2017-06-13
申请号	US14/211780	申请日	2014-03-14
[标]申请(专利权)人(译)	玛芬股份有限公司		
申请(专利权)人(译)	MUFFIN INCORPORATED		
当前申请(专利权)人(译)	MUFFIN INCORPORATED		
[标]发明人	MCKINNIS PETER S ZHOU YUN ROBBINS SARAH FEARNOT NEAL E		
发明人	MCKINNIS, PETER S. ZHOU, YUN ROBBINS, SARAH FEARNOT, NEAL E.		
IPC分类号	A61B8/00 A61B8/12 A61B1/00 A61B8/08 A61N7/02 A61N7/00		
CPC分类号	A61B8/4281 A61B8/12 A61B8/4272 A61B8/445 A61B8/4461 A61B1/00064 A61B8/0891 A61N7/022 A61N2007/0043 A61N2007/0082		
助理审查员(译)	KELLOGG , MICHAEL		
优先权	61/787768 2013-03-15 US		
其他公开文献	US20140276083A1		
外部链接	Espacenet USPTO		

摘要(译)
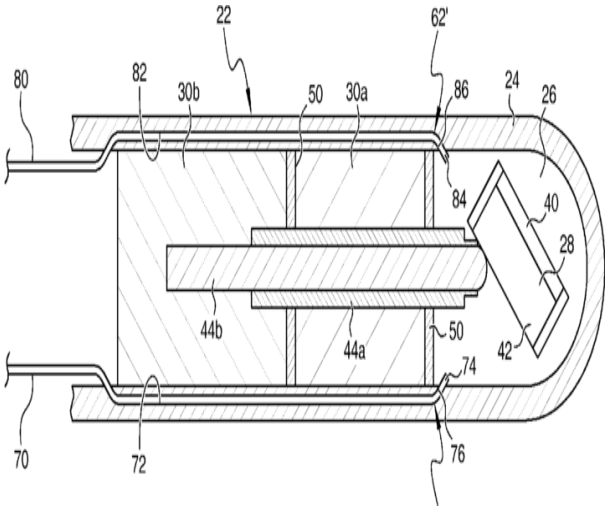
公开了用于对身体部位，特别是血管内部成像的装置和方法的实施例。在特定实施例中，导管具有尖端腔室，其中是安装在枢转机构上的超声换能器，用于转动换能器的马达，以及用于枢转换能器的工具。这种工具的示例是线性马达，轴或细丝，并且当工具不使换能器枢转时，枢转机构可被偏置以返回到基部位置。在其他实施例中，使用类似的机构可以旋转和/或枢转反射来自换能器的超声信号的镜子。