US006436046B1

(12) **United States Patent**
Napolitano et al.

(10) **Patent No.: US 6,436,046 B1**
(45) **Date of Patent: Aug. 20, 2002**

(54) **DIAGNOSTIC ULTRASOUND IMAGING METHOD AND SYSTEM WITH IMPROVED FRAME RATE**

(75) Inventors: **David J. Napolitano**, Pleasanton; **Christopher R. Cole**, Redwood City; **Gregory L. Holley**, Mountain View; **John A. Hossack**, Palo Alto; **Charles E. Bradley**, Burlingame; **Patrick Phillips**, Sunnyvale, all of CA (US)

(73) Assignee: **Acuson Corporation**, Mountain View, CA (US)

(*) Notice: Subject to any disclaimer, the term of this patent is extended or adjusted under 35 U.S.C. 154(b) by 0 days.

(21) Appl. No.: **09/698,995**

(22) Filed: **Oct. 27, 2000**

Related U.S. Application Data

(60) Division of application No. 09/282,396, filed on Mar. 31, 1999, now Pat. No. 6,193,663, which is a continuation-in-part of application No. 09/198,219, filed on Nov. 23, 1998, now abandoned, which is a continuation-in-part of application No. 08/993,395, filed on Dec. 18, 1997, now abandoned, and a continuation-in-part of application No. 08/993,533, filed on Dec. 18, 1997, now abandoned.

(51) **Int. Cl.**[7] **A61B 8/00**
(52) **U.S. Cl.** **600/447**; 600/458
(58) **Field of Search** 600/437, 443, 600/447, 458; 73/625–626; 367/311, 103–105

(56) **References Cited**

U.S. PATENT DOCUMENTS

6,193,662 B1 2/2001 Hwang
6,193,663 B1 * 2/2001 Napolitano et al. 600/447
6,228,031 B1 * 5/2001 Hwang et al. 600/447

* cited by examiner

Primary Examiner—Francis J. Jaworski

(57) **ABSTRACT**

A medical diagnostic ultrasonic imaging system acquires receive beams from spatially distinct transmit beams. The receive beams alternate in type between at least first and second types across the region being imaged. The first and second types of receive beams differ in at least one scan parameter other than transmit and receive line geometry, and can for example differ in transmit phase, transmit or receive aperture, system frequency, transmit focus, complex phase angle, transmit code or transmit gain. Receive beams associated with spatially distinct ones of the transmit beams (including at least one beam of the first type and at least one beam of the second type) are then combined. In this way, many two-pulse techniques, including, for example, phase inversion techniques, synthetic aperture techniques, synthetic frequency techniques, and synthetic focus techniques, can be used while substantially reducing the frame rate penalty normally associated with such techniques.

60 Claims, 18 Drawing Sheets

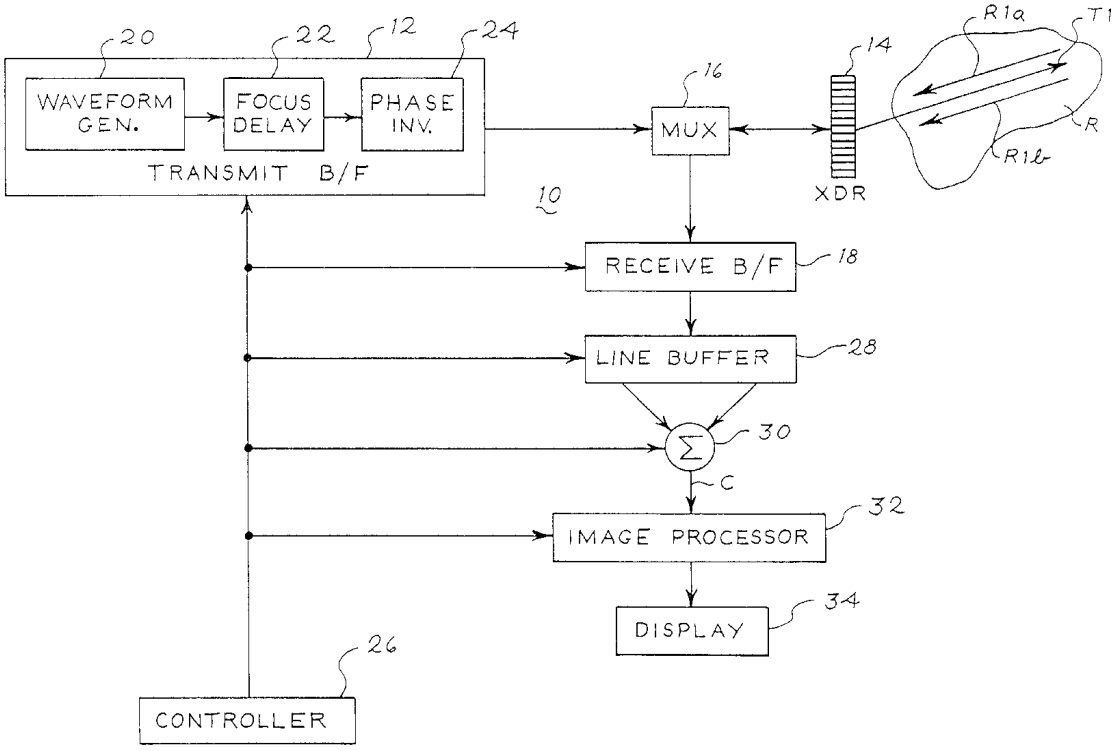

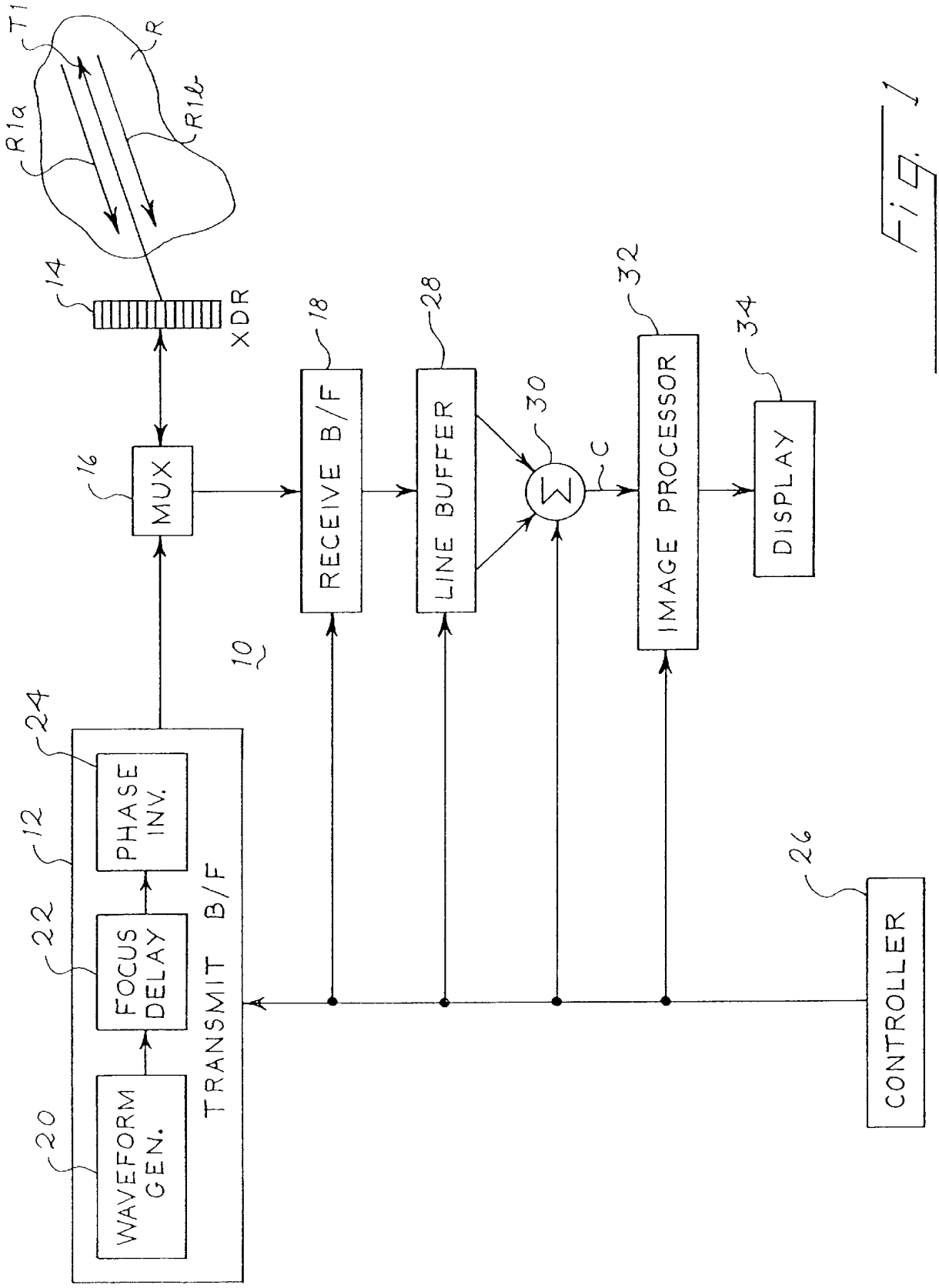
T1
R
R1a
R1b
14
XDR
16
MUX
18
RECEIVE B/F
28
LINE BUFFER
30
C
32
IMAGE PROCESSOR
34
DISPLAY
10
24
PHASE INV.
12
22
FOCUS DELAY
20
WAVEFORM GEN.
TRANSMIT B/F
26
CONTROLLER

Fig. 1

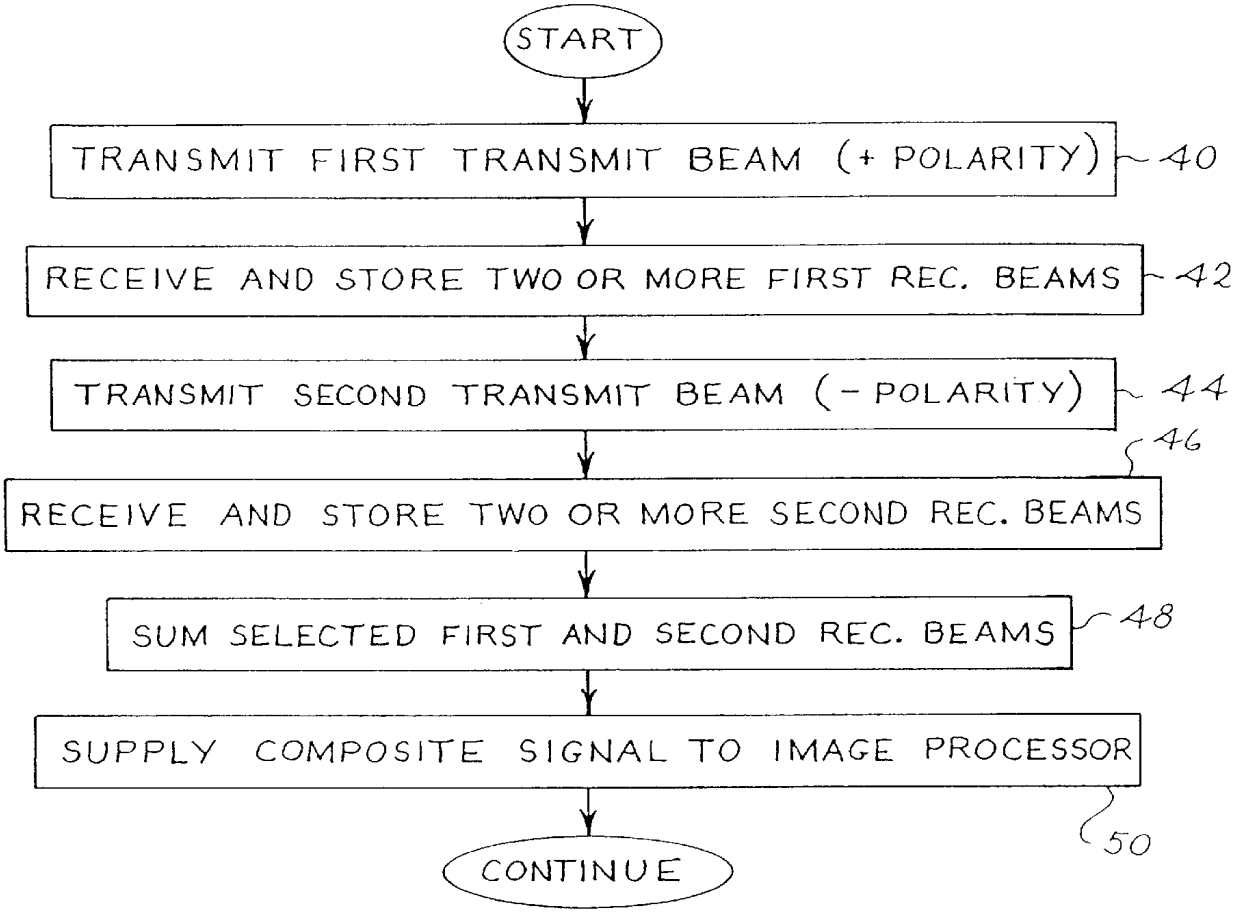
START
TRANSMIT FIRST TRANSMIT BEAM (+ POLARITY)
40
RECEIVE AND STORE TWO OR MORE FIRST REC. BEAMS
42
TRANSMIT SECOND TRANSMIT BEAM (- POLARITY)
44
46
RECEIVE AND STORE TWO OR MORE SECOND REC. BEAMS
SUM SELECTED FIRST AND SECOND REC. BEAMS
48
SUPPLY COMPOSITE SIGNAL TO IMAGE PROCESSOR
50
CONTINUE

Fig. 2

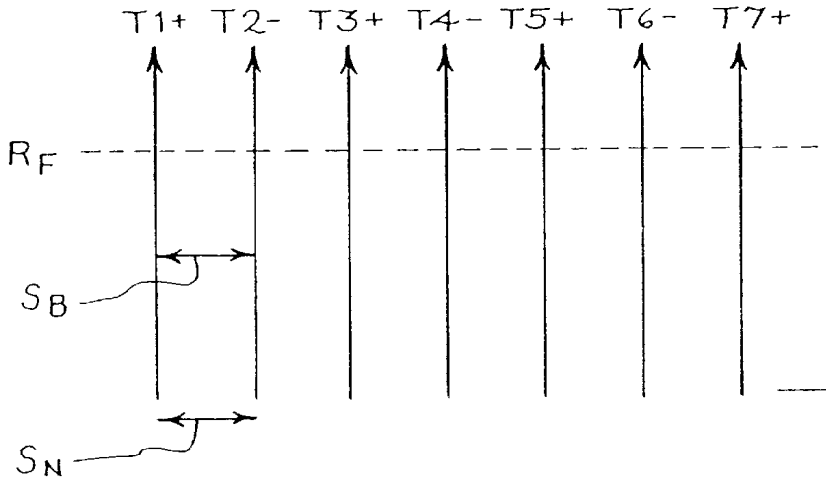
T1+ T2- T3+ T4- T5+ T6- T7+
R_F
S_B
S_N

Fig. 11

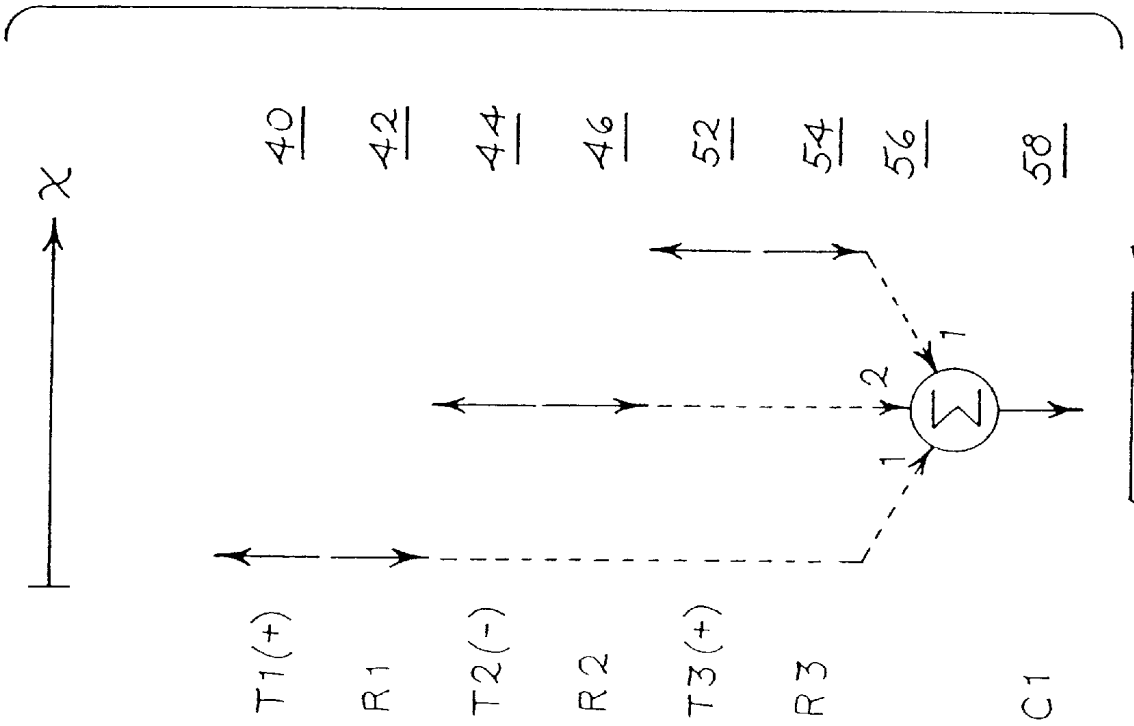
x
40
42
44
46
52
54
56
58
T1(+)
R1
T2(-)
R2
T3(+)
R3
C1
1
2
1

Fig. 4

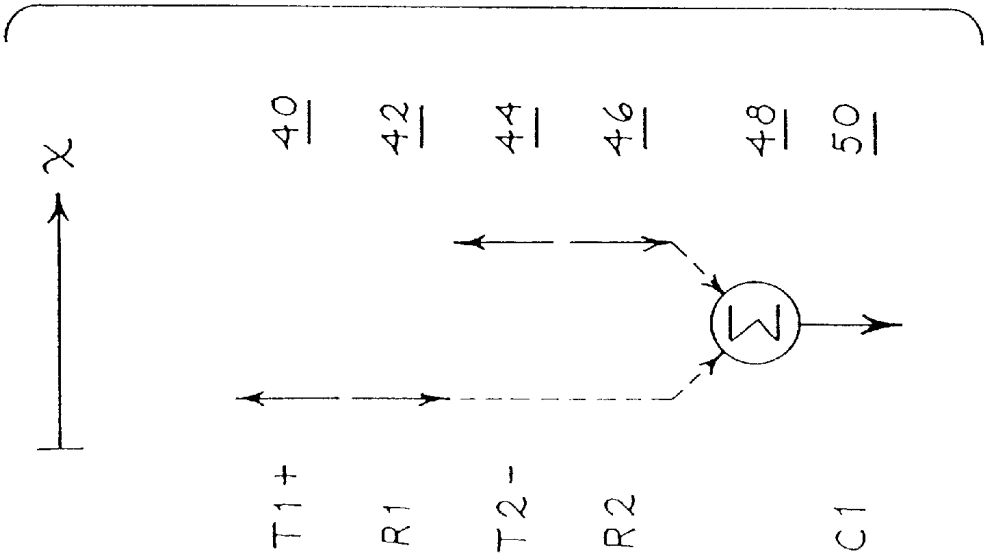
x
40
42
44
46
48
50
T1+
R1
T2-
R2
C1

Fig. 3

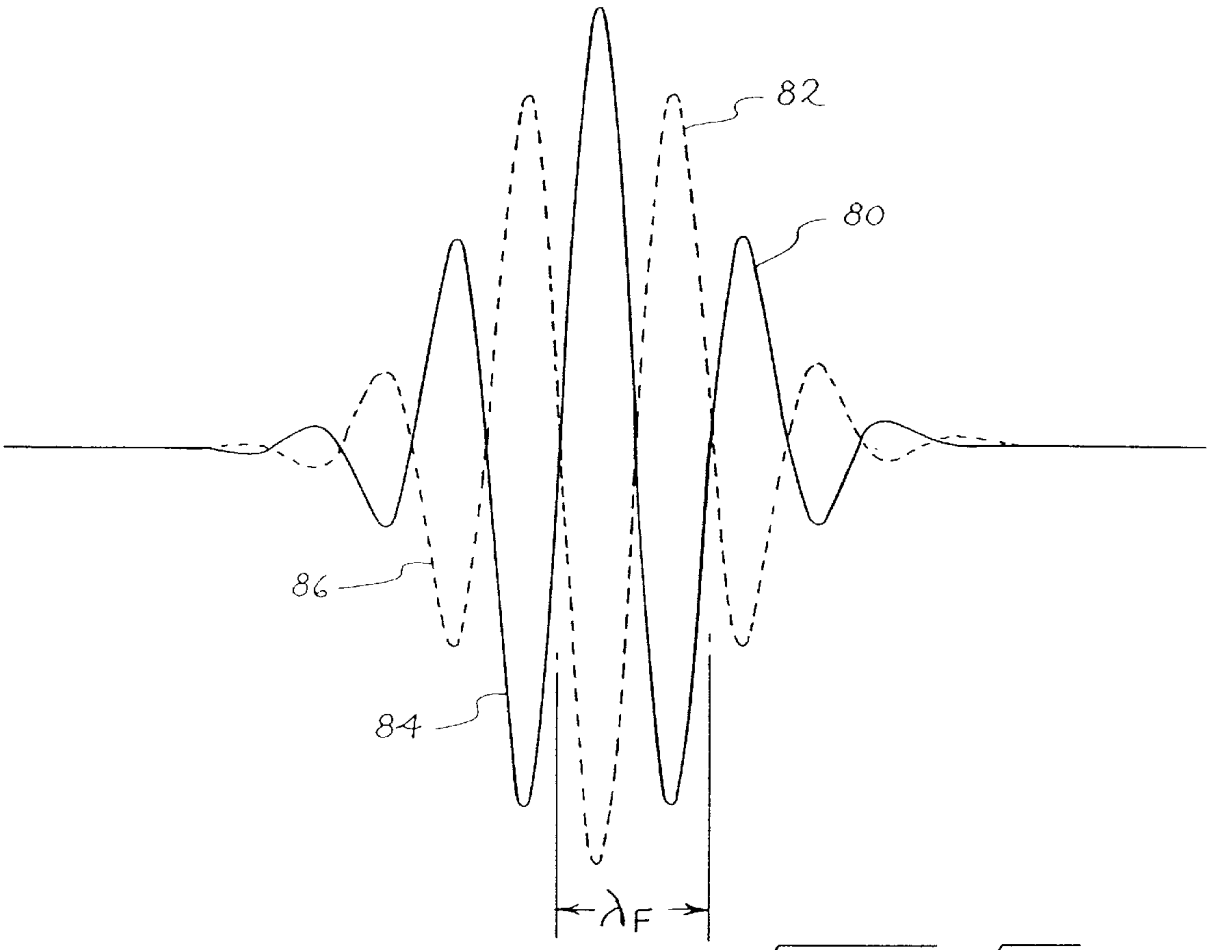

Fig. 5

Fig. 6

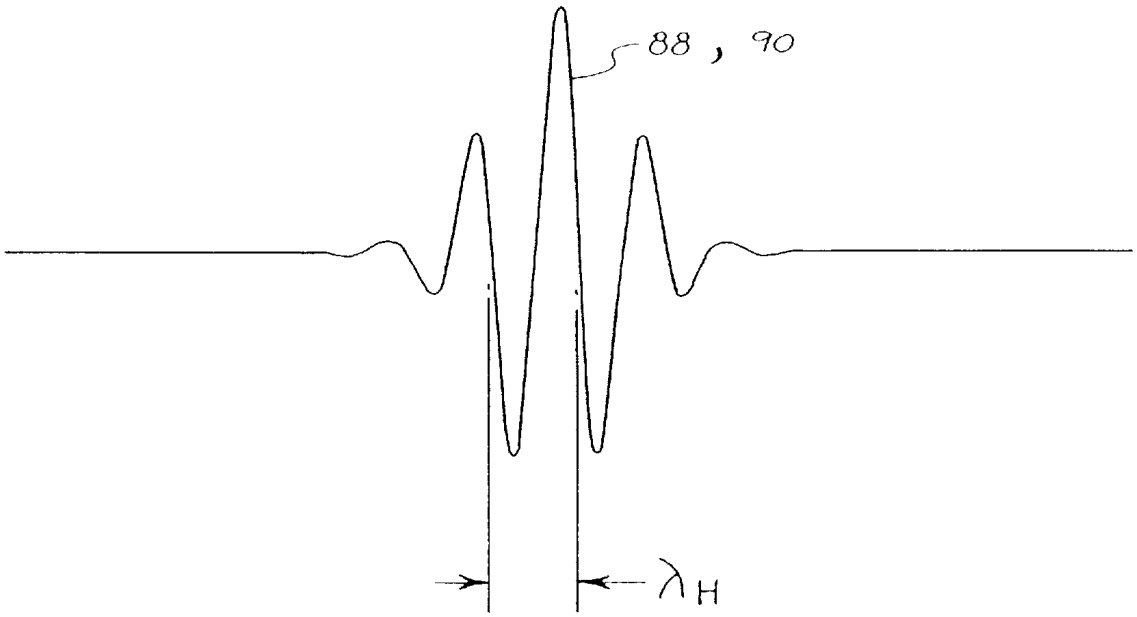

Fig. 7

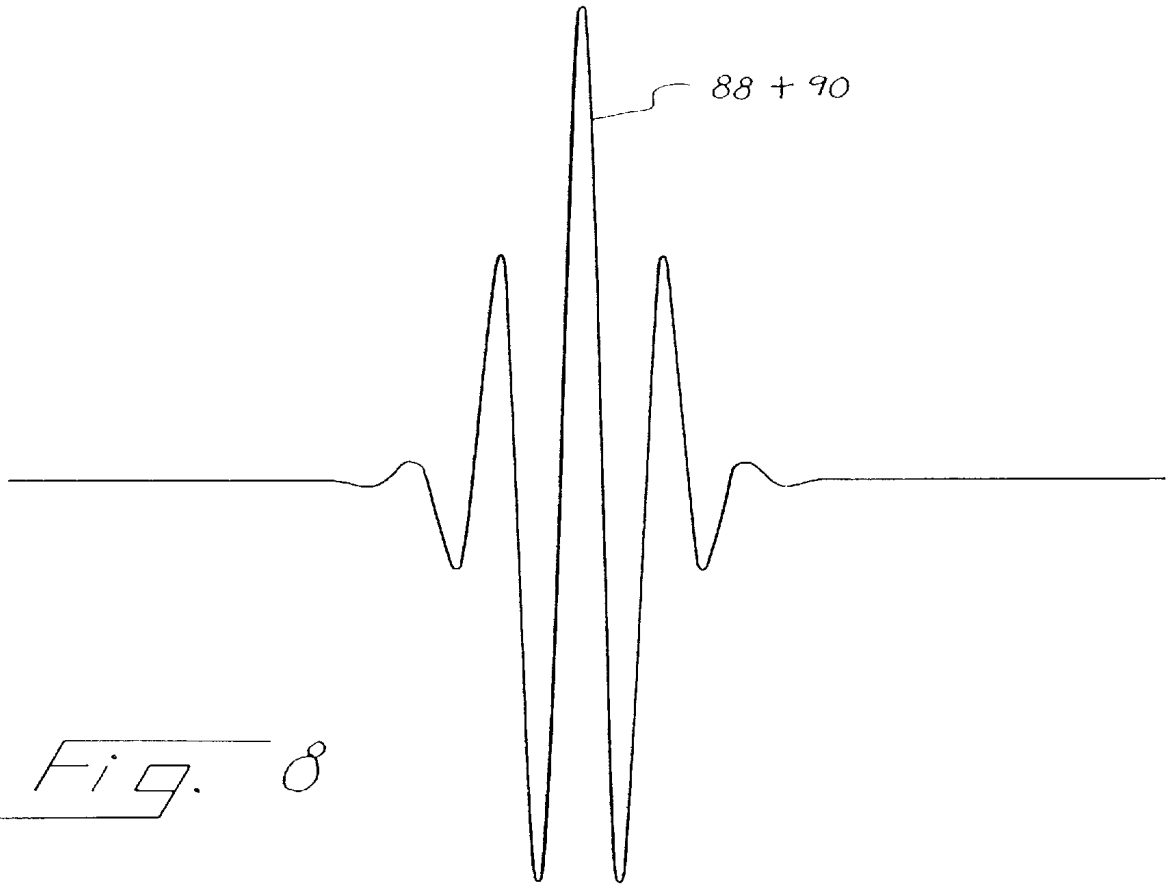

Fig. 8

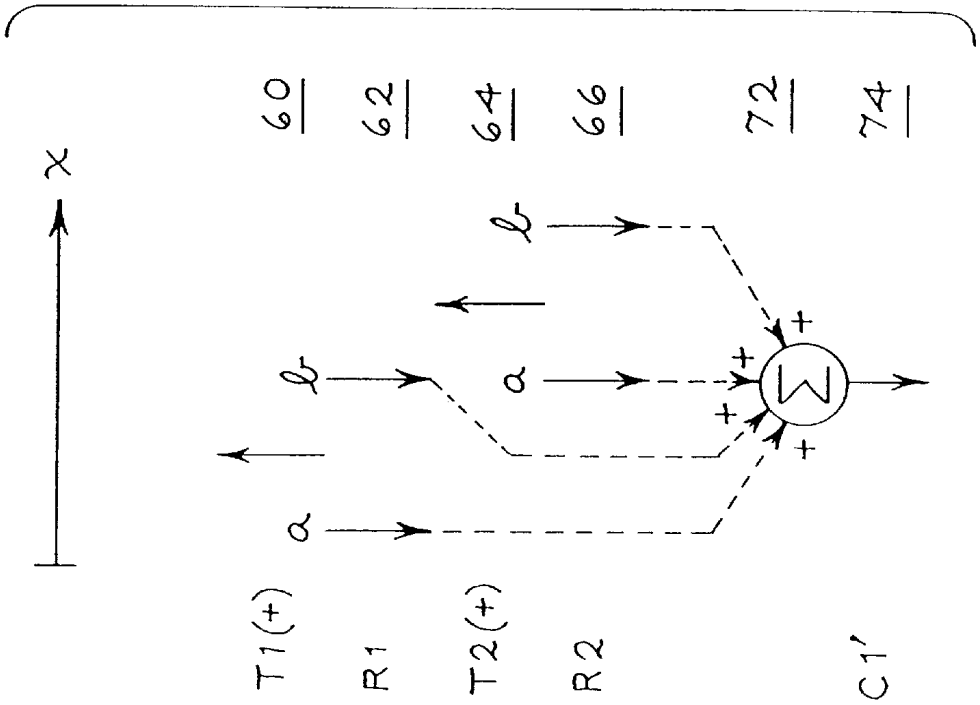

Fig. 10

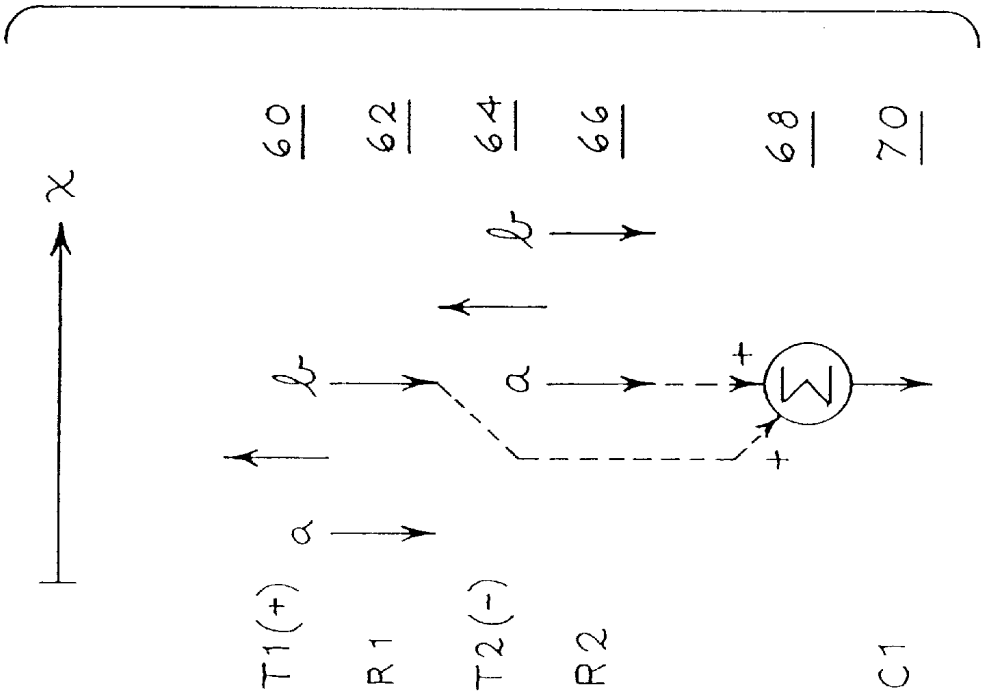

Fig. 9

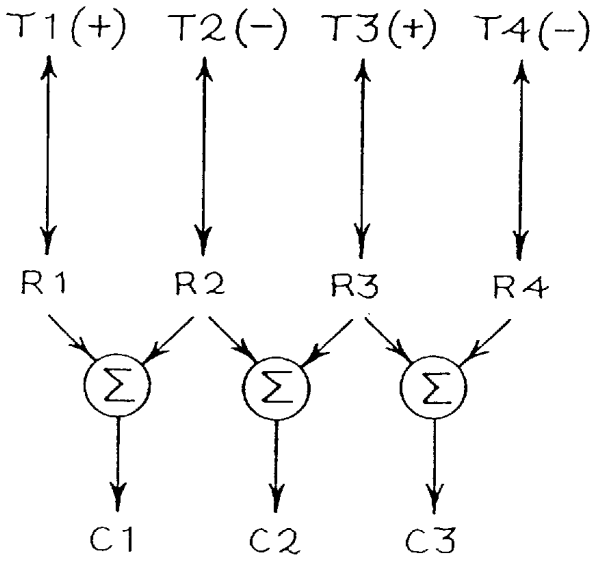
T1(+)
T2(−)
T3(+)
T4(−)
R1
R2
R3
R4
Σ
Σ
Σ
C1
C2
C3

Fig. 12

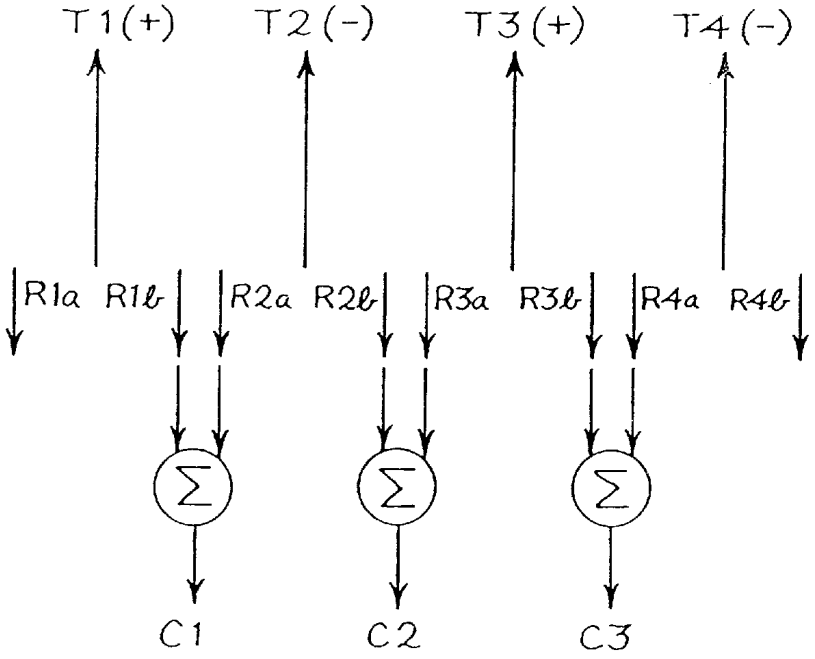
T1(+)
T2(−)
T3(+)
T4(−)
R1a
R1b
R2a
R2b
R3a
R3b
R4a
R4b
Σ
Σ
Σ
C1
C2
C3

Fig. 13

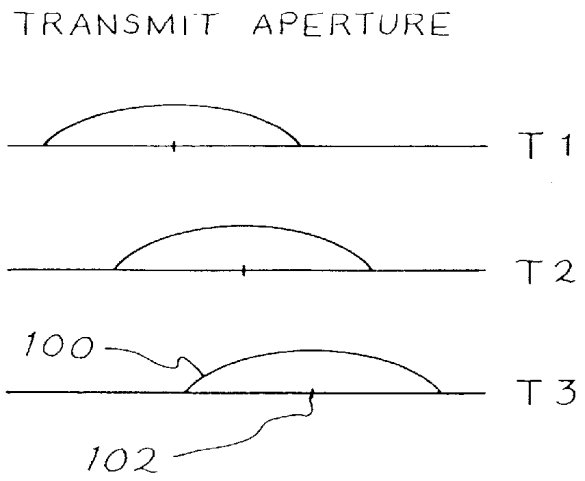

Fig. 14

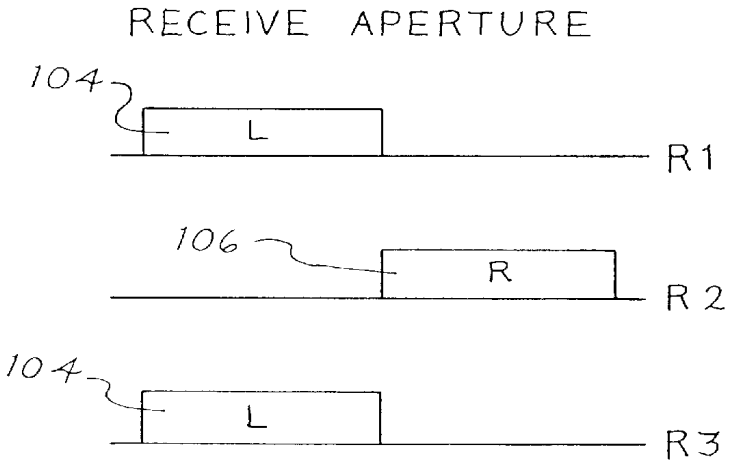

Fig. 15

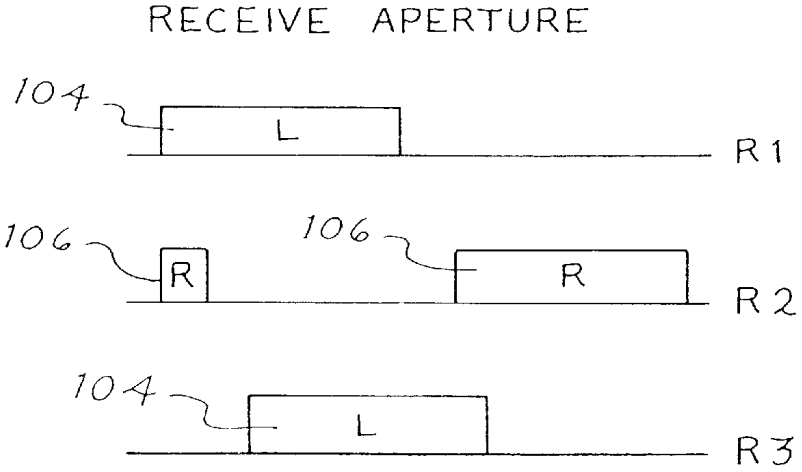

Fig. 16

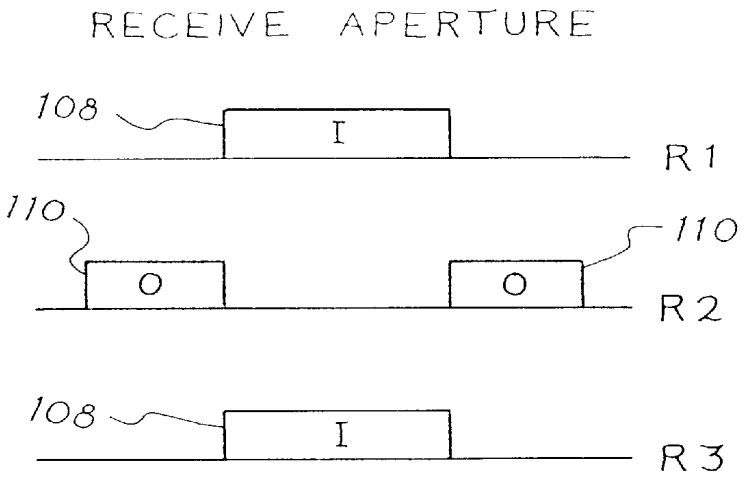

Fig. 17

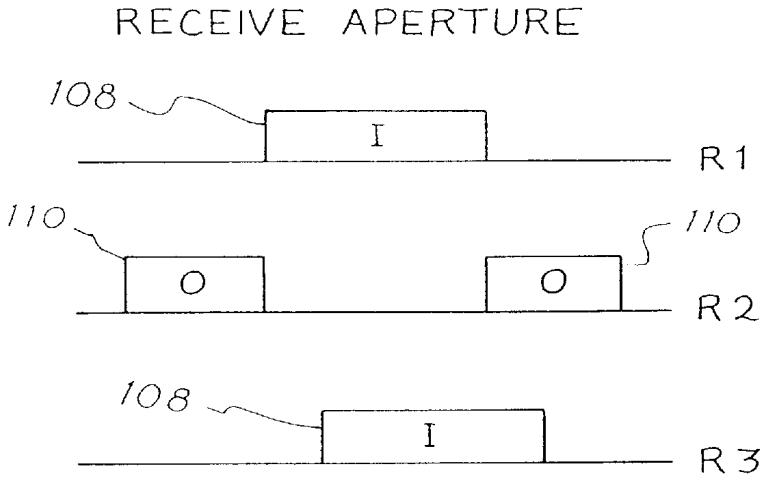

Fig. 18

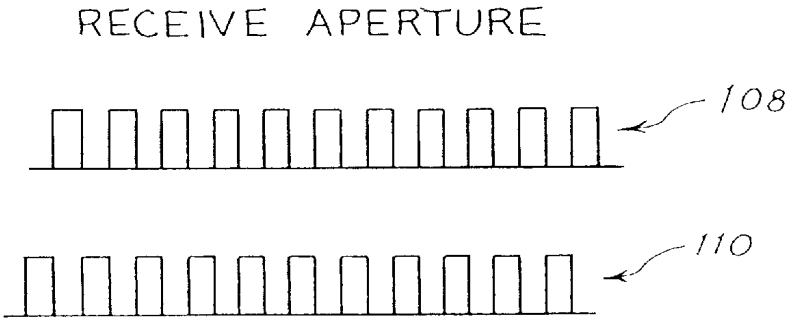

Fig. 19

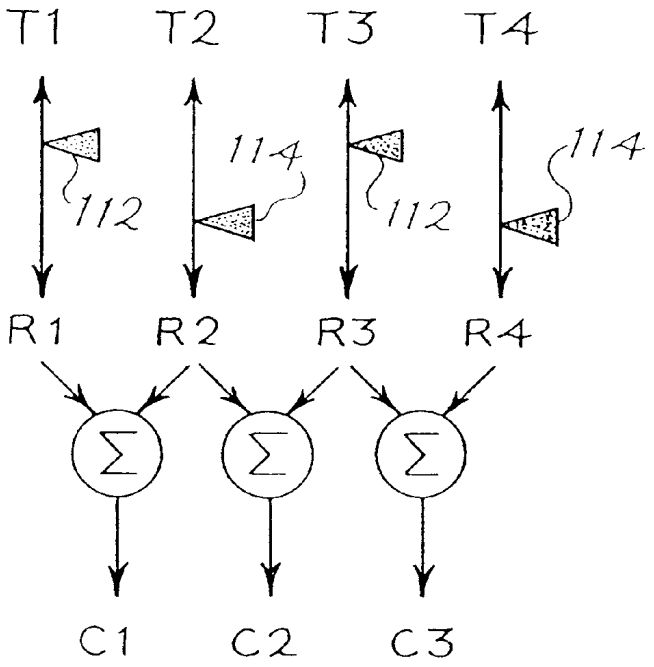
T1
T2
T3
T4
112
114
112
114
R1
R2
R3
R4
Σ
Σ
Σ
C1
C2
C3

Fig. 20

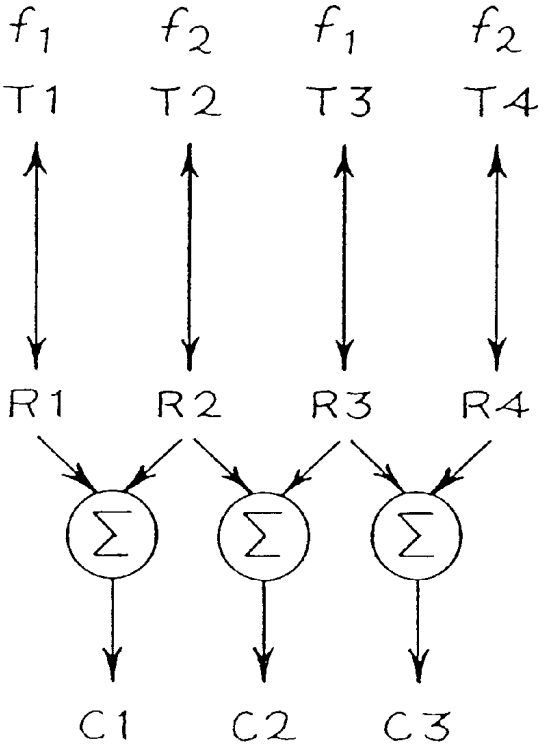
f1
f2
f1
f2
T1
T2
T3
T4
R1
R2
R3
R4
Σ
Σ
Σ
C1
C2
C3

Fig. 21

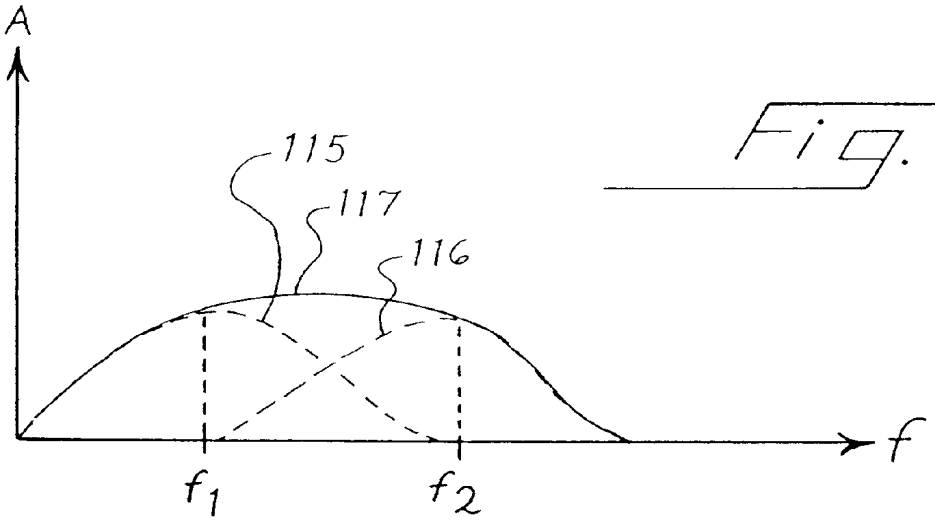
A
115
117
116
f
f_1
f_2

Fig. 22

Fig. 23

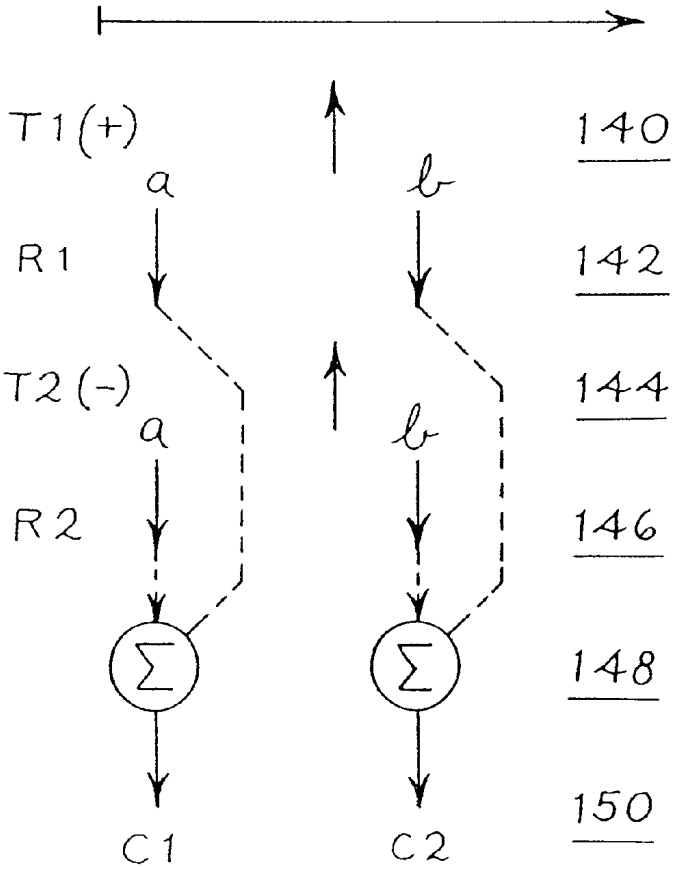
T1(+)
a
b
140
R1
142
T2(-)
a
b
144
R2
146
Σ
Σ
148
150
C1
C2

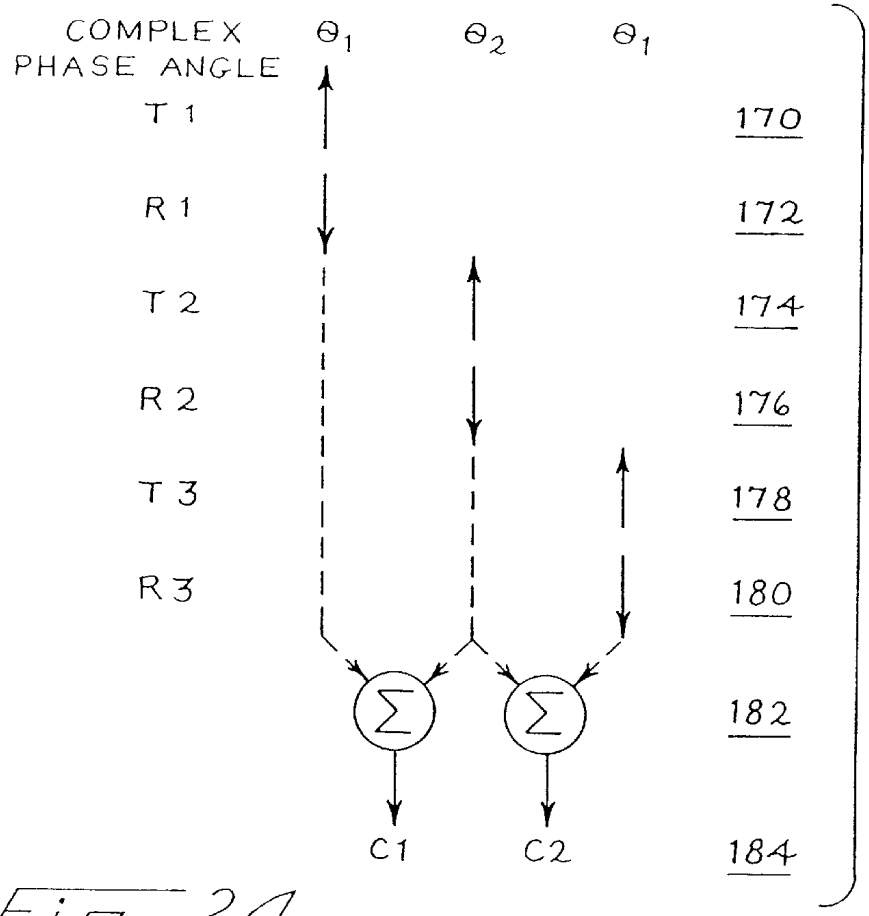
COMPLEX PHASE ANGLE
θ_1
θ_2
θ_1
T 1
R 1
T 2
R 2
T 3
R 3
170
172
174
176
178
180
182
184
C1
C2

Fig. 24

Fig. 26

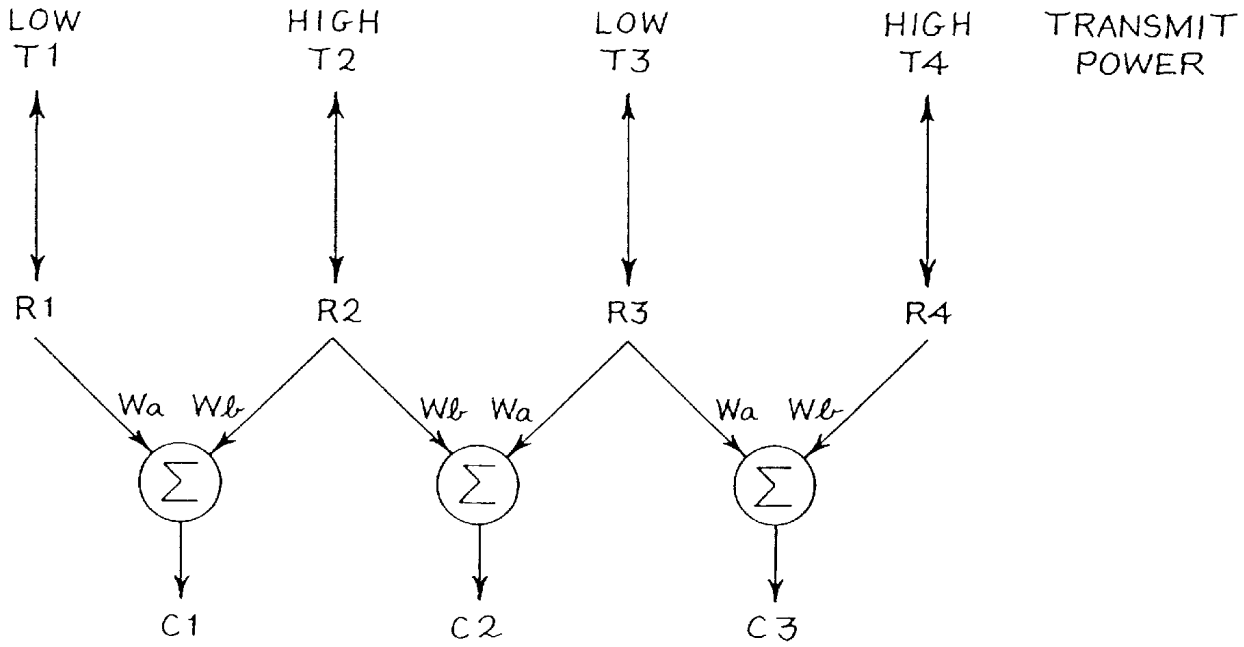
LOW T1
HIGH T2
LOW T3
HIGH T4
TRANSMIT POWER
R1
R2
R3
R4
Wa Wb
Wb Wa
Wa Wb
C1
C2
C3

Fig. 25

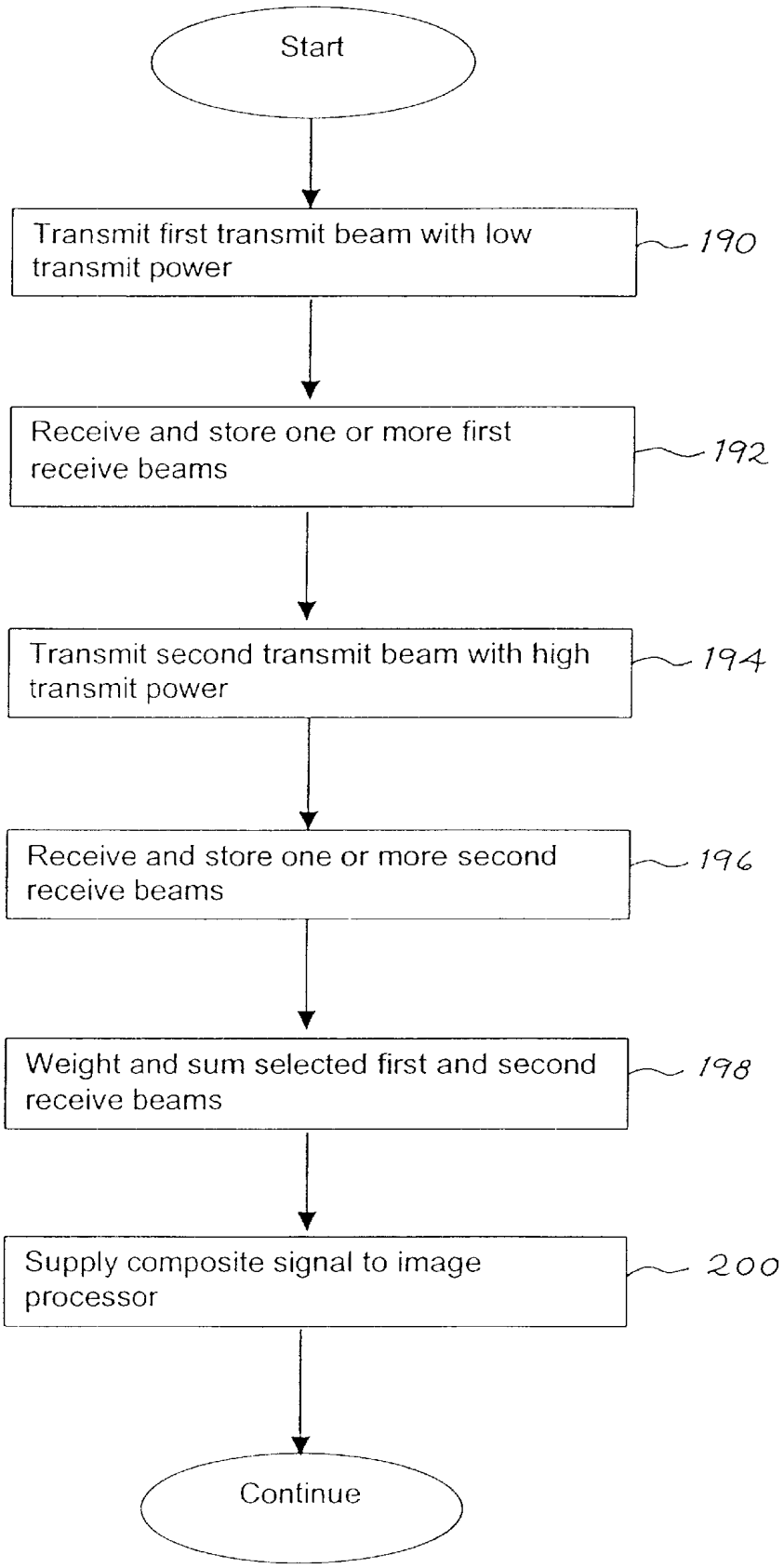
Start
Transmit first transmit beam with low transmit power
190
Receive and store one or more first receive beams
192
Transmit second transmit beam with high transmit power
194
Receive and store one or more second receive beams
196
Weight and sum selected first and second receive beams
198
Supply composite signal to image processor
200
Continue

Fig. 27

		Wa = 2, Wb = -1	Wa = 4, Wb = -1
SCAN LINE	TX GAIN	COMPOSITE SIGNAL	COMPOSITE SIGNAL
1	1	HARMONIC	FUNDAMENTAL
2	2	HARMONIC	FUNDAMENTAL
3	1	HARMONIC	FUNDAMENTAL
4	2	HARMONIC	FUNDAMENTAL

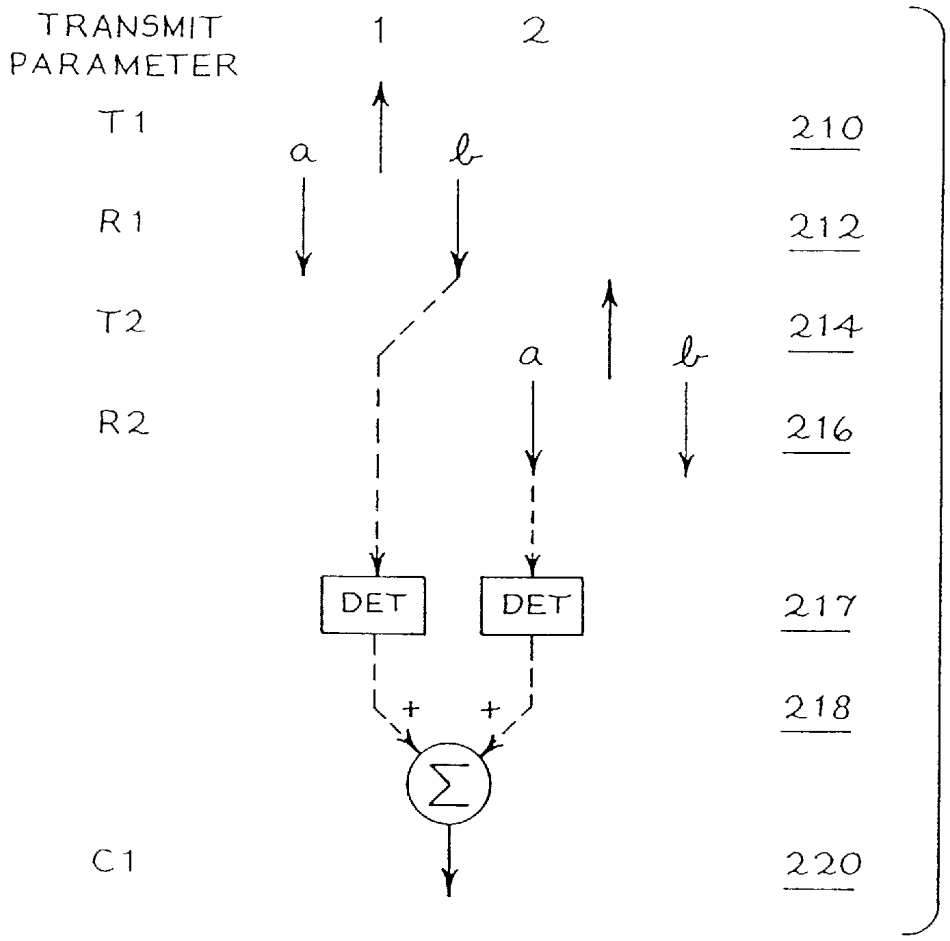

Fig. 29

Fig. 28

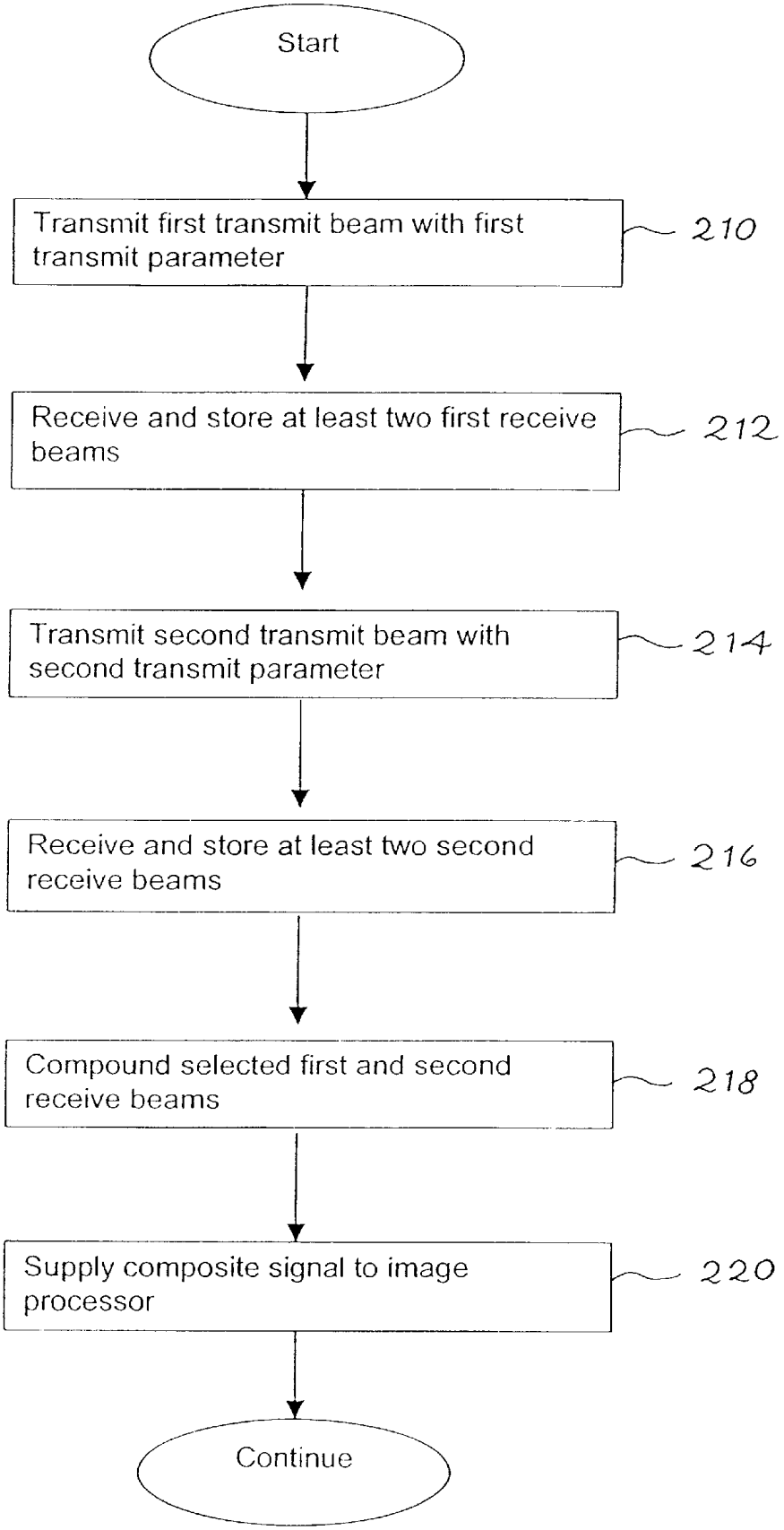
Start
Transmit first transmit beam with first transmit parameter
210
Receive and store at least two first receive beams
212
Transmit second transmit beam with second transmit parameter
214
Receive and store at least two second receive beams
216
Compound selected first and second receive beams
218
Supply composite signal to image processor
220
Continue

Fig. 30

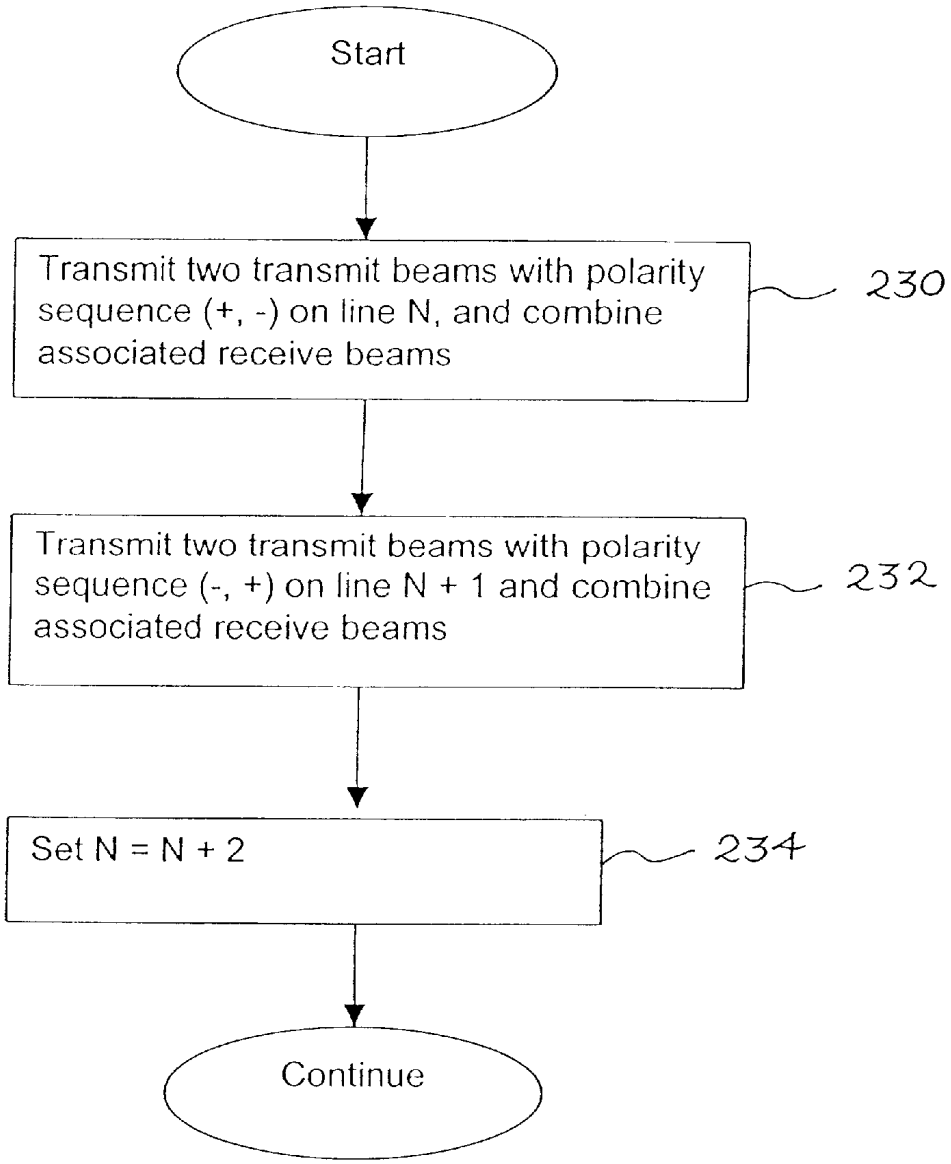
Start
Transmit two transmit beams with polarity sequence (+, -) on line N, and combine associated receive beams
230
Transmit two transmit beams with polarity sequence (-, +) on line N + 1 and combine associated receive beams
232
Set N = N + 2
234
Continue

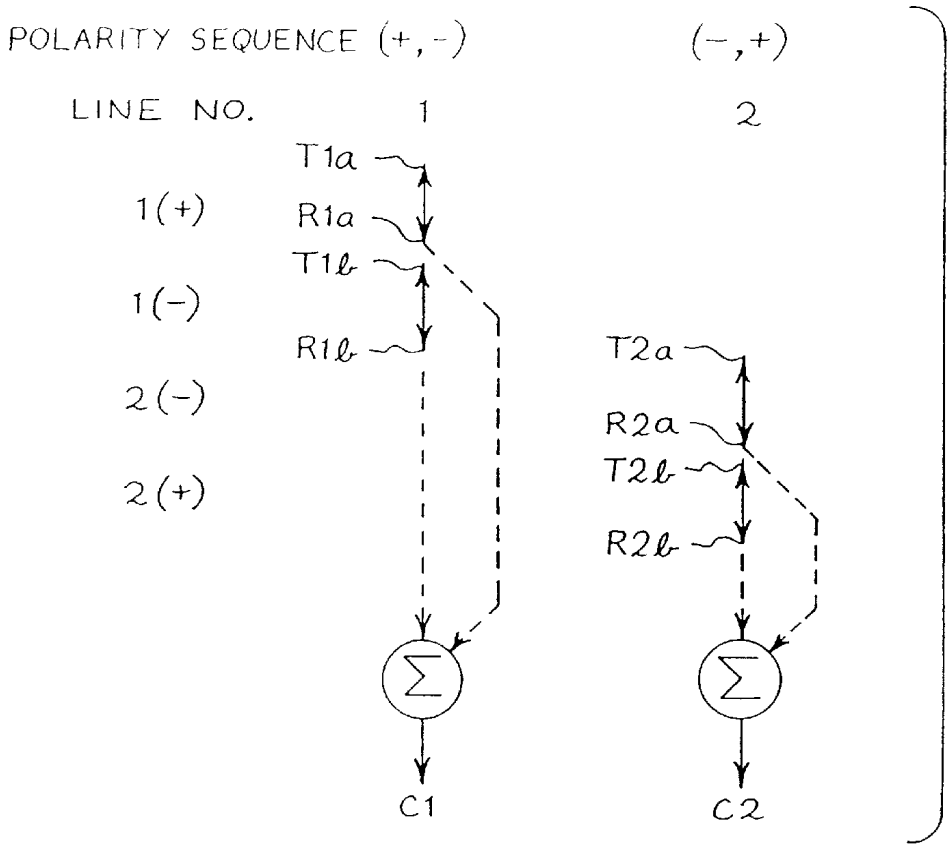
POLARITY SEQUENCE (+,-)
(-,+)
LINE NO.
1
2
T1a
R1a
T1b
R1b
1(+)
1(-)
2(-)
2(+)
T2a
R2a
T2b
R2b
Σ
Σ
C1
C2

Fig. 31

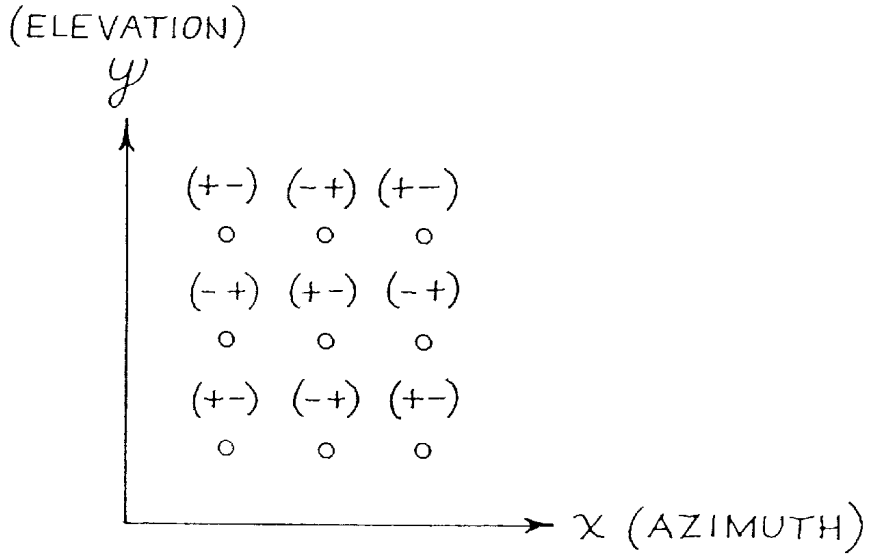
(ELEVATION)
y
(+-) (-+) (+-)
(-+) (+-) (-+)
(+-) (-+) (+-)
x (AZIMUTH)

Fig. 32

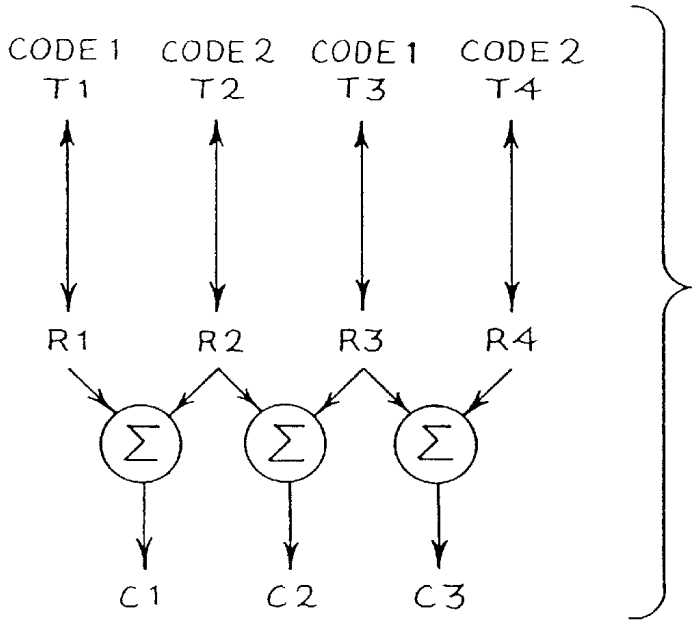
CODE 1
T1
CODE 2
T2
CODE 1
T3
CODE 2
T4
R1
R2
R3
R4
Σ
Σ
Σ
C1
C2
C3

Fig. 33

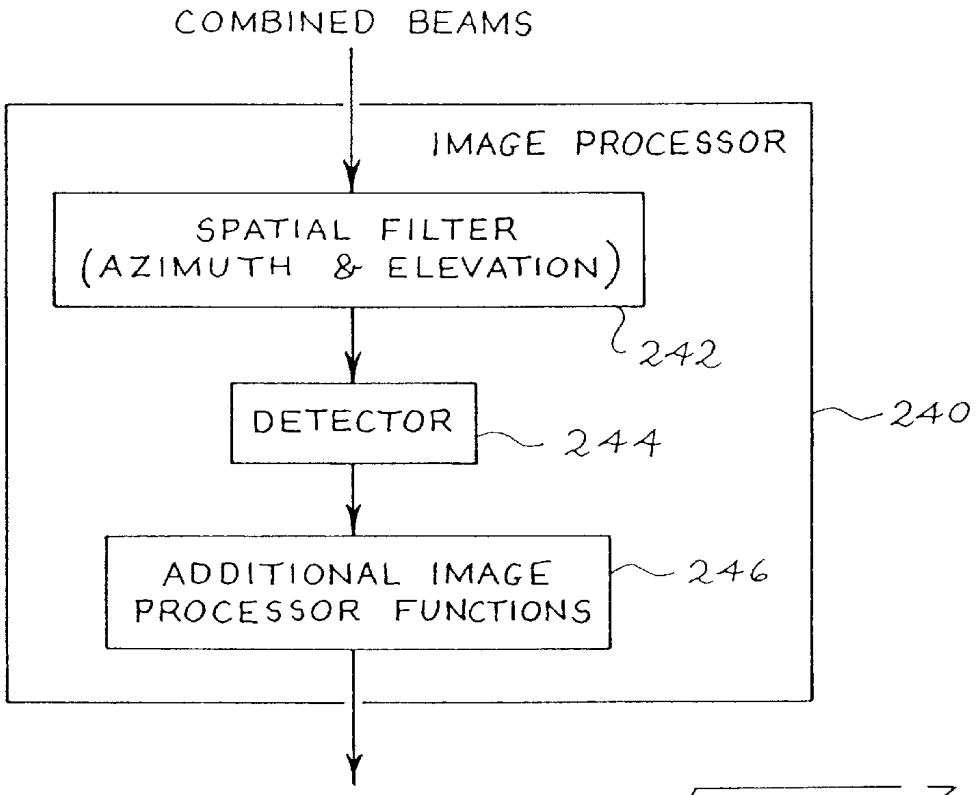
COMBINED BEAMS
IMAGE PROCESSOR
SPATIAL FILTER
(AZIMUTH & ELEVATION)
242
DETECTOR
244
240
ADDITIONAL IMAGE
PROCESSOR FUNCTIONS
246

Fig. 34

DIAGNOSTIC ULTRASOUND IMAGING METHOD AND SYSTEM WITH IMPROVED FRAME RATE

RELATED APPLICATIONS

This application is a division of application Ser. No. 09/282,396, filed Mar. 31, 1999 U.S. Pat. No. 6,193,663, which is in turn continuation-in-part of U.S. patent application Ser. No. 09/198,219, filed Nov. 23, 1998 abandoned, which is in turn a continuation-in-part of U.S. patent application Ser. No. 08/993,395, filed Dec. 18, 1997 abandoned, and U.S. patent application Ser. No. 08/993,533, filed Dec. 18, 1997 abandoned. All three of these related U.S. patent applications are hereby incorporated by reference in their entirety.

BACKGROUND OF THE INVENTION

This invention relates to medical diagnostic ultrasonic imaging methods and systems, and in particular to improvements to such systems that allow an increased frame rate.

In various medical diagnostic ultrasonic imaging applications, multiple transmit beams are fired along the same ultrasound line. Examples of such applications include two-pulse techniques that use phase inversion subtraction to enhance harmonic image components, synthetic aperture techniques, synthetic spectrum techniques, and sequential focus techniques. The requirement for multiple transmit pulse firings on each ultrasound line results in a substantial reduction in frame rate.

For example, Chapman U.S. Pat. No. 5,632,277 discloses an ultrasound imaging system that employs phase inversion subtraction to enhance the image. In the disclosed system, two transmit ultrasonic pulses which differ in phase by 180° are focused in the same beam direction. The echo signals associated with these pulses are stored and then summed. Linear echoes destructively interfere in this summation due to the 180° phase difference between the two transmitted ultrasonic pulses. Non-linear echoes do not destructively interfere to the same extent, because the phases associated with non-linear echoes no longer differ by 180°. In this way, the amplitude of the non-linear echoes can be increased relative to the amplitude of the linear echoes in the summed signal.

The system disclosed in the Chapman patent suffers from the disadvantage that two ultrasonic pulses must be directed along each beam direction, and this requirement reduces the frame rate by a factor of two.

Similarly, Cole U.S. Pat. No. 5,617,862 discusses a system that coherently sums receive beams along the same steering direction to achieve a synthetic aperture. The disclosed system also results in a substantial reduction in frame rate.

The reductions in frame rate discussed above are inevitable in the disclosed systems, and in many cases the frame rate may fall to clinically unacceptable levels. Additionally, the multiple firing techniques discussed above reduce frame rate in discrete steps. For example, when two transmit beam firings are required for each transmit beam direction, the frame rate is reduced by a factor of two as compared to conventional single transmit beam operation. It would be advantageous to have a technique whereby a continuous trade off could be made between selected performance factors and the resulting frame rate when employing various multiple-pulse modes of operation.

SUMMARY

By way of introduction, preferred embodiments described below transmit a plurality of spatially distinct ultrasonic transmit beams into a region. A plurality of receive beams are received from the region, each receive beam associated with a respective one of the transmit beams. The transmit and receive beams include beams of at least first and second types. The first and second types of beams differ in at least one scan parameter other than transmit and receive line geometry, and can for example differ in transmit waveform, receive spectral response phase, aperture, frequency, focus, gain, code, complex phase angle, or alternate polarity sequence. Receive beams associated with spatially distinct ones of the transmit beams (including at least one beam of the first type and at least one beam of the second type) are then preferably combined, either in a coherent manner prior to detection or in a compounding operation subsequent to detection.

Preferably, the first and second types of beams alternate on a line-by-line or group-of-lines by group-of-lines basis. It is the combination that synthesizes the desired feature such as two-pulse cancellation, synthetic aperture, synthetic spectrum, or multiple focus. This approach allows a continuous tradeoff between performance and frame rate by adjustment of the scan line density. For example, if the same scan line density is used in both the normal mode and one of the alternating line modes described above, there is no frame rate loss.

The present invention is defined by the following claims, and nothing in this section should be taken as a limitation on those claims.

BRIEF DESCRIPTION OF THE DRAWINGS

FIG. **1** is a block diagram of an ultrasonic imaging system that incorporates a presently preferred embodiment of this invention.

FIG. **2** is a flowchart of a portion of a method practiced by the system of FIG. **1**.

FIGS. **3** and **4** are schematic diagrams illustrating the formation of a composite signal in two alternative embodiments in which a single receive beam is acquired for each transmit beam.

FIGS. **5** through **8** are waveform diagrams illustrating the operation of the method shown in FIG. **3**.

FIGS. **9** and **10** are schematic diagrams of alternative embodiments in which multiple receive beams are acquired for each transmit beam.

FIG. **11** is a diagram showing the spacing of a set of transmit beams generated by the system of FIG. **1** as compared to the Nyquist spacing.

FIGS. **12** and **13** are schematic diagrams of the methods of FIGS. **3** and **9**, respectively.

FIG. **14** is a schematic diagram showing transmit apertures utilized in an alternating line aperture embodiment of this invention.

FIGS. **15–19** are schematic diagrams showing receive apertures used in various alternating line aperture embodiments of this invention.

FIG. **20** is a flowchart showing an alternating line focus embodiment of this invention.

FIG. **21** is a flowchart showing an alternating line frequency embodiment of this invention.

FIG. **22** is a graph showing frequency characteristics of the embodiment of FIG. **21**.

FIG. **23** is a flowchart of an additional embodiment of this invention.

FIG. **24** is a schematic diagram showing an alternating line complex phase angle embodiment of this invention.

FIG. **25** is a flowchart showing an alternating line transmit gain embodiment of this invention.

FIG. **26** is a schematic diagram of the embodiment of FIG. **25**.

FIG. **27** is a chart illustrating alternative modes of operation of the embodiment of FIG. **26**.

FIG. **28** is a flowchart showing an alternating line compounding embodiment of this invention.

FIG. **29** is a schematic diagram illustrating the embodiment of FIG. **28**.

FIG. **30** is a flowchart of an alternating line polarity sequence embodiment of this invention.

FIG. **31** is a schematic diagram illustrating operation of the embodiment of FIG. **30**.

FIG. **32** is a schematic diagram illustrating operation of another embodiment of an alternating line polarity sequence embodiment of this invention.

FIG. **33** is a schematic diagram of an alternating line transmit code embodiment of this invention.

FIG. **34** is a block diagram of an image processor suitable for use in the embodiment of FIG. **1**.

DETAILED DESCRIPTION OF THE PRESENTLY PREFERRED EMBODIMENTS

The present invention can take many forms, including the specific examples presented in the following sections.

Alternating Line Phase Embodiments

Referring now to the drawings, FIG. **1** shows a schematic view of an ultrasonic imaging system **10** that incorporates a presently preferred embodiment of this invention that provides alternating line phase. The system **10** includes a transmit beamformer **12** that is coupled to a phased array transducer **14** by a multiplexer **16**. The multiplexer **16** also couples the transducer **14** to a receive beamformer **18**.

The transmit beamformer **12** in part operates as a conventional transmit beamformer to generate a set of transmit signals for the individual transducers included in the transducer **14**. For example, the transmit beamformer **12** can include a waveform generator **20** that applies a suitably shaped ultrasonic pulse to a focus delay **22**. The focus delay **22** provides conventional steering delays by any suitable combination of delays, phase shifts and phase rotations. The focus delays are selected to cause ultrasonic signals from the transducer **14** to constructively interfere at a selected transmit focus along a selected transmit beam direction. In FIG. **1**, an exemplary transmit beam T**1** is shown.

The transmit beamformer **12** additionally includes a phase inverter **24** that is controlled by a controller **26**. In this example, the phase inverter **24** is active only for every other transmit beam. Thus, transmit beams T**1**, T**3**, T**5**, . . . are transmitted with positive polarity, and transmit beams T**2**, T**4**, T**6**, . . . are transmitted with inverted or negative polarity.

The receive beamformer **18** can operate in a single beam mode, in which a single receive beam is acquired for each transmit beam, or in a multiple receive beam mode, in which multiple receive beams are acquired in association with each transmit beam. Typically, in the single receive beam mode each receive beam is spatially aligned with the associated transmit beam, while in the multiple receive beam mode each of the receive beams is spatially offset from the respective transmit beam. In FIG. **1**, two receive beams R**1***a* and R**1***b* are shown in association with the transmit beam T**1**. As shown in FIG. **1**, the transmit beams including the transmit beam T**1** are directed into a region R of the subject, and the receive beams R**1***a*, R**1***b* are associated with echoes from the region R.

The receive beamformer **18** applies appropriate delays and phase rotations to coherently sum receive signals from the transducer **14** to create the desired receive beams along desired directions. These receive beams are applied to a line buffer **28** that stores the receive beams for further processing. In this embodiment, the line buffer **28** stores the receive beams coherently. That is, sufficient timing or phase information is preserved, or sufficient phase corrections were made, to allow the interference effects discussed below to be obtained consistently.

Selected receive beams associated with multiple, spatially distinct transmit beams are applied to a summer **30** for summation to form a composite signal C that is applied to an image processor **32**. The image processor **32** forms a conventional image such as a B mode image and presents this image on a display **34**.

FIG. **2** provides a flowchart of a portion of a method practiced by the system of FIG. **1**. The system transmits a first transmit beam of positive polarity in a first direction in step **40**, and receives and stores one or more first receive beams associated with this first transmit beam in step **42**. Then the transmit beamformer transmits a second transmit beam of negative polarity in a second direction in step **44**. The second transmit beam is usually adjacent to the first transmit beam. One or more second receive beams associated with the second transmit beam are received and stored in step **46**, and selected ones of the first and second receive beams are summed in step **48** to generate a composite signal, which is supplied to the image processor in step **50**.

FIG. **3** illustrates the method of FIG. **2** diagrammatically. In FIG. **3** the X direction proceeds from left to right, and transmit and receive beams of differing azimuthal positions are plotted at differing X coordinates. Reference numerals **40–50** have been used in FIG. **3** to designate portions of FIG. **3** that correspond to the correspondingly numbered steps of FIG. **2**. Note that the first and second receive beams R**1**, R**2** that are summed in step **48** are associated with spatially distinct transmit beams T**1** (positive polarity) and T**2** (negative polarity), respectively.

FIG. **4** shows another embodiment of the method. of this invention which includes steps **40–46** as described above. In this embodiment, a third transmit beam T**3** (positive polarity) is transmitted along a third spatially distinct direction in step **52**, and a corresponding receive beam R**3** is acquired in step **54**. Thus, the receive beams R**1**, R**2**, R**3** are all aligned with the corresponding transmit beams T**1**, T**2**, T**3** and are all spatially distinct. These three receive beams R**1**, R**2**, R**3** are summed in step **56** using summing values [1, 2, 1] as shown in FIG. **4** to generate a composite signal C**1** that is applied to the image processor in step **58**.

FIGS. **5–8** diagrammatically illustrate the benefits obtained with the methods of FIGS. **2–4**. FIG. **5** shows the ultrasonic waveform associated with the positive polarity transmit beams T**1**, T**3** in solid lines and the inverted or negative polarity ultrasonic waveform associated with transmit pulse T**2** in dotted lines. As shown in FIG. **5**, the inverted polarity pulse differs from the positive polarity pulse by phase inversion or a phase shift of 180°. The ultrasonic pulse shown in FIG. **5** is an amplitude modulated sinusoid, and the sinusoid has a fundamental wavelength 8_F. Thus, the pulses shown in FIG. **5** represent the fundamental components **80**, **82** of the transmit beams T**1** and T**2**, respectively.

FIG. **5** can also be taken as a representation of the fundamental components **84**, **86** of the receive beams R**1**, R**2**, respectively, assuming a different amplitude scale. The fundamental components **84**, **86** of the receive beams are created by linear echoes of the fundamental components **80**,

82 of the ultrasonic transmit beams, and the fundamental component 84 of the receive beam R1 is 180° out of phase with respect to the fundamental component 86 of the receive beam R2. FIG. 6 schematically shows the summation of the fundamental components 84, 86 of the receive beams R1, R2. Because the fundamental components 84, 86 are substantially equal in amplitude, and because they differ in phase by 180°, the fundamental components 84, 86 of the receive beams R1, R2 destructively interfere to a substantial extent.

The situation is quite different with respect to the harmonic components of the receive beams R1, R2, as shown in FIG. 7. Because the harmonic components 88, 90 of the receive beams R1, R2 are created by non-linear effects, they are not characterized by a phase shift of 180°. In this case, the harmonic components 88, 90 are second harmonic components having a wavelength 8_H equal to one-half of 8_F. In this case, the harmonic receive components 88, 90 have substantially the same phase, and when summed they constructively interfere as shown in FIG. 8.

In general, the fundamental components of the receive beams will not destructively interfere completely. Nevertheless, in this embodiment the fundamental components of the receive beams destructively interfere to a greater extent than the harmonic components of the receive beams, such that the harmonic components of the receive beams are emphasized in the composite signals.

FIGS. 9 and 10 relate to multiple receive beam embodiments of this invention. In the method diagrammed in FIG. 9, a first transmit beam T1 (of positive polarity) is transmitted along a first azimuthal direction in step 60, and two associated receive beams R1*a*, R1*b* are acquired in step 62. Multiple-receive-beam beamformers are described in U.S. Pat. No. 5,827,188, assigned to the assignee of the present invention. Note that the receive beams R1*a*, R1*b* are offset spatially on respective sides of the transmit beam T1. In step 64, a second transmit beam T2 (of negative polarity) is transmitted along a second transmit direction, spatially distinct from the first transmit direction of the transmit beam T1. Two corresponding receive beams R2*a*, R2*b* are acquired in step 66, and two spatially aligned receive beams R1*b*, R2*a* are added together in step 68. Note that the summed receive beams R1*b*, R2*a* are spatially aligned along the azimuthal direction, but that they are associated with spatially distinct transmit beams T1, T2, respectively. The summing step 68 generates a composite signal C1 that is applied to the image processor in step 70. The method of FIG. 9 is anticipated to provide particularly good rejection of the fundamental component in the composite signal, due to the fact that the summed receive beams R1*b* and R2*a* are spatially aligned.

FIG. 10 shows a modified form of the method of FIG. 9, in which steps 60–66 are performed as described previously. In this case, the summing step 72 sums a total of four receive beams R1*a*, R1*b*, R2*a*, R2*b* to produce the composite signal C1' that is applied to the image processor in step 74.

In the methods shown in FIGS. 3, 4, 9 and 10, only a single composite signal is created. In practice, the illustrated methods are repeated as further transmit beams are fired and further receive beams are acquired.

FIG. 12 shows the manner in which the method of FIG. 3 can be used with multiple transmit beams that traverse the region of interest. In FIG. 12, four transmit beams T1–T4 of alternating polarity are used to acquire associated receive beams R1–R4 that are summed as shown to produce composite signals C1–C3. Thus, three composite signals C1–C3 are acquired using only four transmit events. Similarly, FIG. 13 shows the manner in which the method of FIG. 9 can be used with transmit beams that traverse the region of interest. In these examples, the advantage of fundamental component rejection is obtained without any substantial penalty in frame rate, since the summed receive signals are associated with spatially distinct transmit beams.

In multiple receive beam embodiments such as those discussed above in conjunction with FIGS. 9 and 13, the receive beams associated with a single transmit beam may be combined to produce an intermediate combined beam aligned with the respective transmit beam. This intermediate combined beam does not provide cancellation of fundamental or harmonic components, but it may be useful in various frequency compounding techniques.

FIG. 11 schematically shows an array of transmit beams T1–T7 that can be used in the methods described above. In FIG. 11, the focal range R_F is illustrated, and the separation between adjacent transmit beams is indicated by the symbol S_B. In FIG. 11 the Nyquist spacing (i.e. the beam spacing required for Nyquist sampling) is shown by the symbol S_N. In this embodiment, there is a trade-off between azimuthal spacing of the transmit beams and selective enhancement of the harmonic component in the summing step described above. In particular, if the beam spacing S_B is equal to the Nyquist spacing S_N an associated azimuthal resolution and level of fundamental component suppression will be obtained. If the transmit beams are positioned more closely together such that the ratio S_B/S_N is less than one, the level of fundamental suppression will be improved in the composite signals at the expense of increased time to acquire a frame of image data. Depending upon the degree of improvement desired in the level of fundamental suppression, the ratio S_B/S_N can be made greater or less than one-half.

In another mode of operation, the ratio S_B/S_N can be made greater than one such that the azimuthal dimension is sampled with a spacing greater than the Nyquist spacing S_N. In this case, the time required to acquire a frame is reduced, but the level of suppression of the fundamental component in the composite signal is reduced. Relationships between the beam spacing S_B and the Nyquist spacing S_N described above can be applied either at the focal range R_F or ranges spaced from the focal range R_F.

For a given transmit line density there is substantially no adverse impact on frame rate due to the use of the fundamental suppression method described above. The fundamental components of the receive beams in general will not be perfectly cancelled due to the fact that the associated transmit beams are spatially distinct, and therefore the phase difference between the fundamental components of the summed receive beams will often be substantially different than 180° such as 180°±30° or 180°±45°. However, the more closely the transmit beams are spaced (the more over sampled they are) the better the fundamental cancellation in the composite signal that will be achieved. Thus, the method described above allows a trade-off between frame rate and degree of fundamental rejection in the composite signal. The positive and negative polarity ultrasound lines can approach each other by increasing line density and thereby increasing the rejection of the fundamental component in the composite signal. As a greater degree of over-sampling is used, degradation of lateral resolution associated with the summing step is also reduced.

The alternating line phase embodiments described above alternate the polarity of the phase of the transmit beam across scan lines. Coherent combination of the pre-detection receive beams cancels fundamental signals and enhances

second harmonic signals, thereby allowing an increase in axial resolution. This technique offers a tradeoff between additional rejection of the fundamental component and frame rate as a function of the selected line density. When operated at Nyquist line spacing, the alternating line phase technique described above can provide additional rejection at up to two times the frame rate of conventional two-pulse techniques.

The alternating line phase techniques can be used (1) to create combined beams that cancel fundamental components and enhance even harmonic components, as described above (by adding the respective receive beams), or (2) to create combined beams that cancel even harmonic components and enhance fundamental components (by subtracting the respective receive beams). If desired, two different combined beams may be generated from a single set of receive beams, one combined beam emphasizing even harmonic components and the other combined beam emphasizing odd harmonic components. Such combined beams can be compounded to reduce speckle effects.

The combined signals described above with enhanced second harmonic components and cancelled or suppressed fundamental components may be used in any of the aberration correction techniques described in U.S. patent application Ser. No. 09/061,082 filed Apr. 15, 1998, assigned to the assignee of this invention and hereby incorporated by reference.

As described above, receive signals **Y1**, **Y2** associated with differently-phased transmit beams **T1**, **T2** may be combined by addition (to emphasize the even harmonic components) or by subtraction (to emphasize the fundamental components). Other combinations of **Y1** and **Y2** are possible, as described for example in Bradley U.S. patent application Ser. No. 60/095,768, filed Aug. 7, 1998, assigned to the assignee of this invention and hereby incorporated by reference in its entirety. As described in this patent application, the combined signal Zn can take the form

$$Zn=|Y1|^n-|Y2|^n$$

where n is a small positive integer. Z_1 corresponds to the first harmonic component; Z_2 corresponds to a compounded combination of the fundamental and first harmonic components. As used herein, the term "combining" is intended broadly to encompass both linear and nonlinear combinations, including the examples set out above as well as other useful combinations of receive signals or beams.

Simply by way of example, the alternating line phase techniques described above can be implemented using a Sequoia™ ultrasonic imaging system available from Acuson Corporation, Mountain View, Calif., using an Acuson 8L5 transducer. By way of example, the Sequoia™ imaging system can be programmed with the following scan parameters.

transmit f number—1.85

transmit apodization—half circle

receive f number—1.00

receive apodization—uniform

transmit center frequency—3.5 MHz

receive center frequency—7.0 MHz

transmit focus—25 mm

receive focus—10–25 mm

Of course, all of these parameters can readily be modified as desired, depending on the application. Multiple simultaneous transmit beam techniques can be used if desired.

Alternating Line Aperture Embodiments

In the alternating line aperture embodiments of this invention, the transmit aperture, the receive aperture, or both can be alternated across scan lines. Coherent combination of at least two of the pre-detection receive beams forms a synthetic aperture sum which may increase lateral resolution. In alternative embodiments, the alternate apertures may be left/right, inside/outside, even/odd elements of the transducer, or other variations. For example, transmit beams **T1**–**T4** and receive beams **R1**–**R4** can be created in the geometry shown in FIG. **12** discussed above. Adjacent receive beams **R1**-**R2**, **R2**-**R3**, **R3**-**R4** can be combined to produce composite beams **C1**, **C2** and **C3**. The system **10** of FIG. **1** can be used to implement these alternating line embodiments. For these embodiments the transmit beams **T1**–**T4** can be all of the same polarity, rather than of alternating polarity as described above in conjunction with FIG. **12**.

As shown in FIG. **14**, the transmit beams can be provided with a transmit aperture **100** that is centered on the origin **102** of the respective transmit beam. As the origins **102** shift laterally for successive transmit beams, the transmit apertures **100** are shifted in a similar manner.

In this embodiment the receive beams can be considered to be of two types which alternate across the region being imaged. These two types differ in receive aperture. For example, as shown in FIG. **15**, receive beams of the first type (**R1**, **R3**, . . .) are acquired with a receive aperture **104** at the left side of the transducer, and receive beams of the second type (**R2**, **R4**, . . .) are acquired with a receive aperture **106** at the right side of the transducer. If desired, the left and right receive apertures **104**, **106** may translate across the face of the transducer to follow the origin of the respective receive beams, as shown in FIG. **16**. FIG. **16** shows one of the receive apertures wrapping from right to left in receive line **R2**, though such wrapping is not required,

FIGS. **17** and **18** relate to alternative embodiments in which the receive aperture is divided into an inside portion **108** and two outside portions **110**. The receive beams of the first type are acquired using the inside receive aperture **108**, and receive beams of the second type are acquired using the outside receive aperture **110**. As shown in FIG. **18**, the inside and outside receive apertures **108**, **110** can be moved across the face of the transducer so as to remain centered on the origin of the respective receive lines, with or without wrapping.

Many other apertures may be used for the two or more receive apertures associated with respective receive beams. For example, as shown in FIG. **24**, even transducer elements may be used for a first receive aperture **108** for receive beams of the first type, and odd transducer elements may be used for a second receive aperture **110** for receive beams of the second type.

With this arrangement the receive beams that are combined to create the composite beams are of differing types, and the combined beams are therefore characterized by a synthetic aperture that includes signal information associated with multiple apertures (e.g., left/right, inside/outside, or even/odd) in the various embodiments discussed above.

By way of example, the Acuson Sequoia™ ultrasonic imaging system can be used with an Acuson 8L5 transducer to implement the alternating line aperture embodiments described above. By way of example, the following scan parameters can be used:

transmit f number—2.0

transmit apodization—half circle

receive f number—1.0

receive apodization—uniform

transmit focus—25 mm

receive focus—10–25 mm

As before, all of these parameters can readily be modified as desired, depending on the application.

Though not shown in the drawings, a multiple receive beam acquisition method similar to that of FIG. **13** can also be modified to provide the alternating line aperture features discussed above.

If desired, the transmit aperture may also be varied between the first and second types of receive beams, and in some cases more than two types of beams will be appropriate. For example, three different receive apertures can be provided, and three receive beams (one from each aperture type) can be coherently summed to create a synthetic aperture combined beam.

Alternating Line Focus Embodiments

In these embodiments the location of the transmit focus is alternated across scan lines. Coherent combination of the associated receive beams forms a composite beam with improved transmit depth of field at higher frame rates as compared to standard sequential focusing methods, in which multiple segmented portions of an image are acquired with separate respective transmit beams are stitched together.

By way of example, FIG. **20** shows a schematic view of a beam acquisition method similar to that of FIG. **12**. In the schematic view of FIG. **20**, the transmit focus **112**, **114** is indicated by a dark triangle. As shown in FIG. **20**, transmit beams of the first type (T**1**, T**3**, . . .) are characterized by a relatively deep transmit focus **112**, and transmit beams of the second type (T**2**, T**4**, . . .) are characterized by a relatively shallow transmit focus **114**. Receive beams R**1**-R**2**, R**2**-R**3**, R**3**-R**4**, . . . are combined, and in each case the combined receive beams are associated with transmit beams of the first type as well as transmit beams of the second type. Thus, the resulting composite beams C**1**, C**2**, C**3** . . . have an improved transmit depth of field.

Though not shown in the drawings, a multiple receive beam acquisition method similar to that of FIG. **13** can also readily be modified to provide the alternating line focus features discussed above.

Alternating Line Frequency Embodiments

At any given system operating frequency (system sampling rate, filter bandwidth, and so forth), there exists only a limited amount of pulse bandwidth, which can be less than that available from the transducer.

In the alternating line frequency embodiments of this invention, the receive beamformer frequency of operation (system sampling rates, filter bandwidths, and so forth) are alternated from scan line to scan line. Coherent combination of these lines forms a composite line with increased bandwidth at higher frame rates as compared with conventional multipulse methods.

FIG. **21** shows an embodiment of this invention in which the receive lines of the first type (R**1**, R**3**, . . .) are acquired with a frequency of operation f**1**, while receive beams of a second type (R**2**, R**4**, . . .) are acquired with a frequency of operation f**2**. Adjacent receive beams of the first and second type are coherently combined to produce composite beams C**1**, C**2**, C**3**, . . . having an increased bandwidth, as shown in FIG. **22**. In FIG. **22**, the bandwidth of the receive beams of the first and second types are shown at **115**, **116**, respectively, and the bandwidth of the composite beams is shown at **117**. This advantage of a large bandwidth for the composite beams is obtained at a high frame rate.

Though not shown in the drawings, the alternating line frequency embodiments can also implement a multiple receive beam acquisition scheme similar to that of FIG. **13**, in which multiple receive beams are acquired in response to each respective transmit beam.

Alternating Line Complex Phase Angle Embodiments

Copending U.S. patent application Ser. No. 09/282,799 which is hereby incorporated by reference in its entirety, discloses ultrasound imaging methods and systems that combine receive signals from at least two separate transmit pulses that are created from respective components of a desired complex insonification signal that differ in the complex phase angle.

For example, each transmit pulse $h_R(t)$ can be expressed as follows:

$$h_k(t)=Re\{a(t)\exp\{j2\pi f_o t+j\theta_k\}\}.$$

In this representation, the term $(j\theta_k)$ is the complex phase angle of the transmit pulse $h_k(t)$, and the transmit pulses $h_k(t)$ are examples of respective components of a single complex insonification signal that differ in complex phase angle. As explained in detail in above-identified application Ser. No. 09/282,799, the complex phase angles can be selected such that the combined echo signals associated with the transmit pulses exhibit one or more of the following features: selective enhancement of harmonic components of the echo signals, selective enhancement of fundamental components of the echo signals, selective cancellation of unwanted frequency spectra to lower the overall frequency bandwidth and thereby to reduce the sampling rate requirement. The echo signals can be combined in a coherent manner prior to detection, or alternately can be combined subsequent to detection.

One example of this alternating line mode is shown in FIG. **24**, in which the complex phase angle θ_k for scan line k is equal to θ_1 for even scan lines (k=2,4, . . .) and θ_2 for odd scan lines (k=1,3, . . .).

The difference between θ_1 and θ_2 can be selected as appropriate for the application. For example, the difference can be about 90° in one embodiment.

As shown in FIG. **24**, transmit lines T**1**, T**2** and T**3** are successively fired along respective scan lines **1**, **2** and **3** in steps **170**, **174** and **178**, respectively. Receive beams R**1**, R**2**, and R**3** are acquired in steps **172**, **176** and **180**, respectively. Each of the receive beams R**1**, R**2**, R**3** is spatially aligned with the respective transmit beam T**1**, T**2**, T**3**. The transmit beams T**1**, T**2**, T**3** differ in complex phase angle, with transmit beams T**1** and T**3** having the complex phase angle θ_1 and the transmit beam T**2** having the complex angle θ_2. In step **182**, the receive beams R**1** and R**2** are combined to generate respective composite signals C**1** and C**2**. In step **184**, the composite signals C**1** and C**2** are applied to an image processor for further processing.

Though not shown in the drawings, the alternating complex phase angle embodiments can also implement a multiple receive beam acquisition scheme similar that to FIG. **13**, in which multiple receive beams are required in response to each respective transmit beam. Also, multiple simultaneous transmit beams can be used.

This mode is one example of the general class of alternating line modes in which the transmit waveform is alternated from scan line to scan line. There are many other examples, including the alternating line transmit code embodiments described below. Also, other characteristics of the transmit waveform can be alternated, including transmit center frequency, bandwidth, spectral shape, and presence/absence of selected components such as a fractional-harmonic seed. See the discussion of fractional harmonic seeds and several multi-pulse methods as described in

copending U.S. Pat. No. 6,117,082 for further details. The entirety of this application is hereby incorporated by reference herein.

Alternating Line Transmit Gain Embodiments

In these embodiments of the invention, the transmit power or gain is alternated from scan line to scan line. For example, transmit beams **T1**, **T3**, **T5**, . . . on odd scan lines can be fired with a low transmit gain and transmit beams **T2**, **T4**, **T6**, . . . on even scan lines can be fired with high transmit gain. The resulting echo signals can then be combined with weighting factors selected to cause the composite signals to selectively enhance either harmonic or fundamental components of the echo signals.

One specific embodiment is flowcharted in FIG. **25** and schematically illustrated in FIG. **26**. In step **190**, a first transmit beam is transmitted with low transmit power, and in step **192** one or more receive beams are received and stored. In step **194**, a second transmit beam is transmitted with high transmit power, and in step **196** one or more second receive beams are received and stored. In step **198**, selected first and second receive beams are weighted and combined to form composite signals which are supplied to an image processor in step **200**. Note in FIG. **26** that in this embodiment the receive signals **R1**, **R3**, . . . associated with lower power transmit signals are weighted with a weighting factor W_A, while the receive signals **R2**, **R4**, . . . associated with high power transmission signals are weighted with a weighting factor W_B.

FIG. **27** illustrates one embodiment of the general method of FIGS. **25** and **26**. In the example of FIG. **27**, odd numbered scan lines use a transmit gain of 1 and even numbered scan lines use a transmit gain of 2. In this example, the composite signals **C1**, **C2**, . . . emphasize the second harmonic component of the echo signals when W_A is set equal to 2 and W_B is set equal to −1. Alternatively, the composite signals **C1**, **C2**, . . . emphasize the fundamental component of the echo signals when W_A is set equal to 4 and W_B is set equal to −1. This is because the amplitude of the fundamental components of the echo signals scale substantially linearly with transmit gain, while the amplitudes of the second harmonic components of the echo signals scale approximately with the square of the transmit gain. The combining step **198** of FIG. **25** is preferably performed following detection, though it can be placed at other points along the processing path.

As before, these embodiments can also use multiple simultaneous transmit beam techniques and multiple simultaneous receive beam techniques.

Alternating Line Compounding Embodiments

Another alternating line mode applies the techniques discussed above to achieve speckle reduction. In the embodiment shown in FIGS. **28** and **29**, spaced transmit firings are used and multiple receive beams are formed from each transmit firing. Two or more receive beams from each transmit beam are compounded to form composite signals that receive contributions from two or more spatially distinct transmit beams. In this way, image quality is improved.

As shown in the example of FIG. **28**, one ultrasonic imaging method of this type includes steps **210** through **220**. The method is schematically shown in FIG. **29**. In step **200**, a first transmit beam is fired along a first scan line direction and, in step **212**, two receive beams **R1***a*, **R1***b* are received. The receive beams **R1***a* and **R1***b* in this embodiment are spaced on respective sides of the transmit beam **T1**. In step **214**, a second transmit beam **T2** is fired along a second transmit line, spaced from the first, and in step **216** two receive beams **R2***a* and **R2***b* are received on respective sides of the transmit beam **T2**. The transmit beams **T1**, **T2** differ in any desired transmit scan parameter, including any of the parameters described in the various alternating line methods described in this specification. In this embodiment, the receive beams **R1***b* and **R2***a* are spatially aligned with one another and spatially distinct from the transmit beams **T1**, **T2**. In step **217**, the receive beams **R1***a* and **R2***b* are detected, and in step **218**, the receive beams **R1***b* and **R2***a* are compounded (subsequent to detection) to generate a composite signal **C1** that is supplied to the image processor in step **220**.

The method of FIGS. **28** and **28** can be modified. For example, three, four or more receive beams can be acquired in response to each transmit beam. If desired, an axicon transmit beam focus can be used. In order to improve speckle reduction, the transmit beams **T1** and **T2** associated with a single composite signal or the receive beams **R1***b*, **R2***a* associated with a combined signal can differ from one another in many ways to enhance speckle reduction. For example, any of the following parameters can be alternated between transmit beams and/or receive beams: transmit focus, transmit/receive center frequency, transmit gain, transmit aperture/apodization, receive gain, receive aperture/apodization, receive filter (high/low/wide/narrow), axicon transmit/circular receive, axicon receive/circular transmit. If desired, delays used for beamforming may be selected to degrade spatial resolution.

In elevation compounding, when two two-dimensional frames that differ in elevation angle are combined, the compounded two-dimensional frames may differ in any of a number of parameters to enhance speckle reduction, including the following: beam origins, apodization profiles, multiple/single receive beam per transmit event, multiple transmit foci (simultaneous or sequential), different transmit focal depths, or dynamic transmit focusing as described in Hossack U.S. Pat. No. 5,608,690.

Alternating Line Polarity Sequence Embodiments

The embodiments described above have involved firing only a single transmit beam along each scan direction. These embodiments can be considered examples of the invention in which the set of transmit beams in each scan direction is equal to 1. Other embodiments of this invention include more than one transmit beam within each set of transmit lines steered to a specific scan line. For example, the polarity sequence can be alternated from transmit scan line to transmit scan line as described below.

FIG. **31** shows a schematic representation of one embodiment of an alternating line polarity sequence embodiment. In this embodiment transmit line **T1***a* is fired along a first scan line and an associated receive line **R1***a* is then acquired. Then a second transmit beam **T1***b* is fired along the same scan line and the corresponding receive signal **R1***b* is acquired. In this embodiment, the transmit beams **T1***a* and **T1***b* are identical in waveform but opposite in polarity. Receive beams **R1***a* and **R1***b* are combined in a coherent summing operation prior to detection to generate the first combined signal **C1**. These steps are included in the step **230** of the flowchart of FIG. **30**.

Transmit beams **T2***a* (−polarity) and **T2***b* (+polarity) are fired along a second scan line and associated receive beams **R2***a*, **R2***b* are acquired and coherently summed prior to detection to form a second combined signal **C2** (step **232** of FIG. **30**). The combined signals **C1**, **C2** preferentially enhance even harmonic responses in the receive signals while suppressing fundamental and odd harmonic responses in view of the phase inversion of the two transmit beams on each transmit line.

From the foregoing description, it should be apparent that the transmit beams contributing to the combined signal C1 are fired with a first polarity sequence (+−) while the transmit beams associated with the second combined signal C2 are fired with a second, different polarity sequence (−+). In this example, the first polarity sequence (−+) is used for odd numbered scan lines, and the second polarity sequence (−+) is used for even numbered scan lines across the frame.

As shown in FIG. **32**, this technique can also be used in two-dimensional imaging. In one example, the polarity sequence that is used for scan lines distributed in both the azimuthal and elevational direction can be arranged in a checkerboard fashion, as shown in FIG. **32**. In this way, the polarity sequence alternates in both the elevation direction and the azimuthal direction.

The combined signals C1, C2 or FIGS. **30** and **31** are preferably spatially filtered prior to detection as described in detail below in conjunction with FIG. **34**. The combination of the alternating line techniques described above in conjunction with the pre-detection spatial filtering techniques described below enhance the suppression of undesired frequency components in the combined signal.

Alternative embodiments can use multiple transmit beam and/or multiple receive beam techniques. Also, more than two receive beams may be combined, and subtraction can be used instead of addition to form combined signals that emphasize the fundamental components.

Alternating Line Transmit Code Embodiments

As described in co-pending U.S. patent application Ser. No. 09/283,346, filed on the same date as the present application, multiple transmit codes can be used on successive transmit events. Related co-pending U.S. patent application Ser. No. 09/282,510 provides further information on coded transmit beams. The entirety of these two co-pending U.S. patent applications are hereby incorporated by reference for their teaching of such transmission codes. As explained in greater detail in this application, such transmit codes include transmit phase modulation codes and transmit amplitude modulation codes.

By varying the transmission code from transmit event to transmit event, the shape of the transmit pulse can be changed in such a way that the echo signals from transmit events with differing transmit codes have markedly different range lobes. By coherently combining echo signals having differing range lobes, undesired range lobes can be reduced or cancelled to a large extent. Examples of suitable codes that can be varied from transmit event to transmit event include frequency modulated codes and Golay codes. Frequency modulated codes include a wide variety of transmit pulses in which the zero crossings are unevenly spaced. Chirp pulses (of either the rising frequency or falling frequency type) are two examples.

FIG. **33** shows an embodiment of this invention in which transmit code **1** is used for transmit beams T1, T3, . . . on odd transmit lines and transmit code **2** is used for transmit beams T2, T4, . . . on even transmit lines. In this embodiment each transmit event produces a single transmit beam aligned with the respective scan line, and a single receive beam R1, R2, . . . is acquired from each respective transmit beam T1, T2 . . . As shown in FIG. **33**, consecutive receive beams associated with consecutive transmit beams of differing transmit code are coherently combined in a summing operation to produce composite signals C1, C2, . . . By choosing the transmit codes such that the receive beams R1, R2 exhibit substantially different range lobes, such range lobes are suppressed in the combined signals C1, C2, . . . by virtue of the summing operation.

Though not shown in the drawings, alternating line transmit code embodiments can also implement a multiple receive beam acquisition scheme similar to that of FIG. **13**, in which multiple receive beams are acquired in response to each respective transmit beam. Similarly, multiple simultaneous transmit beam techniques can be used with these embodiments.

Embodiments Employing Pre-Detection Spatial Filtering

In many embodiments, it is preferred to include a spatial filter prior to the detection operation in the image processor **32** of FIG. **1**. FIG. **34** shows a diagram of a preferred image processor **240** that includes a spatial filter **242** positioned in the signal path upstream of the detector **244**. Block **246** is used to indicate additional image processing functions, which can include any suitable functions, including conventional functions well-known to those skilled in the art.

The spatial filter **242** preferably performs an azimuthal and/or elevation pre-detection spatial filtering, and can include a real or complex filter. In one embodiment, the spatial filter **242** is made up of a combination of separable range, azimuthal, and elevation filters, which can use either constant filter coefficients or filter coefficients that are varied as a function of range and/or line (azimuth and/or elevation). In another alternative, the spatial filter **242** can include a non-separable spatial filter such as any of the following filters: range/azimuth, range/elevation, azimuth/elevation, or range/azimuth/elevation. As before, the filters may use constant filter coefficients or filter coefficients that vary as a function of range and/or line (azimuth and/or elevation). Preferably, the filters are low-pass filters that have a cutoff frequency determined by simulation or empirically for the particular application.

The combined beams that are applied to the spatial filter **242** can include any of the combined beams described above. For example, the combined beams may include the combined beams discussed above in conjunction with FIGS. **9** and **13**, wherein the combined beams are formed from multiple receive beams associated with a single transmit beam. As another example, the combined beams can also include conventional pulse inversion receive beams such as those described in Chapman, U.S. Pat. No. 5,632,277. In these embodiments, the combined beams are formed as a combination of spatially aligned receive beams associated with spatially aligned transmit beams of opposite polarity.

Additional Embodiments

Other embodiments of this invention transmit a set of ultrasonic transmit beams into a region, including in some cases spatially aligned transmit beams.

Fundamental components of selected transmit beams are characterized by a phase difference of 180°. Ultrasonic receive beams are acquired from the region, and multiple receive beams are associated with each respective one of the transmit beams. At least two receive beams are summed to form a composite signal, and the phase difference in the fundamental transmit components is effective to cause fundamental components of the receive beams to destructively interfere to a greater extent than harmonic components of the receive beams. In some embodiments, three or more receive beams are summed to form the composite signal.

For example, the system of FIG. **1** can be used to practice the methods of FIGS. **9** and **10** with spatially aligned transmit beams.

FIG. **23** shows a flowchart of another embodiment of the method of this invention. In the method of FIG. **23**, a first transmit beam T1 (positive polarity) is transmitted along a first azimuthal direction in step **140**, and in step **142** two spatially distinct receive beams R1*a*, R1*b* are received. As

shown in FIG. **23**, receive beams R1*a* and R1*b* are offset on respective sides of the azimuthal direction of the transmit beam T1. In step **144**, a second transmit beam T2 (negative polarity) is transmitted along the same azimuthal direction as transmit beam T1, and in step **146** two receive beams R2*a*, R2*b* are received. In this embodiment, receive beams R1*a*, R2*a*, are spatially aligned and receive beams R1*b*, R2*b* are spatially aligned. In step **148**, spatially aligned receive beams R1*a*, R2*a* are summed and spatially aligned receive beams R1*b*, R2*b* are separately summed to form composite signals C1, C2 respectively. In step **150** the composite signals C1, C2 are applied to the image processor.

In the method of FIG. **23** two transmit beams are required to generate two composite signals, and therefore the composite signals C1, C2 are acquired with no degradation of temporal resolution or frame rate as compared to conventional single pulse imaging techniques.

Conclusion

Of course, many changes and modifications can be made to the preferred embodiments described above. For example, combinations of the various embodiments described above are possible. In one alternative embodiment, both transmit phase and receive aperture are alternated among beams, using either sequential or simultaneous alternation techniques. For example, in one sequential alternation embodiment left and right receive apertures are alternated with a positive transmit polarity phase over two scan lines, and then left and right receive apertures are alternated with negative transmit polarity phase over the next two scan lines, and all four scan lines are coherently summed to create the composite beam. In one simultaneous alteration technique a positive transmit polarity pulse/left (or inside or even element) receive aperture configuration is alternated with a negative transmit polarity pulse/right (or outside or odd element) receive aperture, and two scan lines are coherently summed to create the composite beam. Simultaneous alteration techniques are preferred for two or more alternating parameters if there is little or no interaction between or among the parameters. In general, the line density controls the resulting performance level and frame rate. In cases where synthetic line features are available with sufficient bandwidths, each of the proposed modes and combinations described above can be programmed to have the same frame rate advantage; however, performance can be improved since common receive lines can be coincident yet multiple coincident transmit lines are avoided to eliminate any unnecessary decrease in the frame rate. This can offer advantages when tissue motion is an issue, as in cardiology applications.

The term "alternate" is therefore intended broadly to encompass alternating sets of n elements, $n \geqq 2$. Thus, the term "alternating line" is broad enough to cover every other line, every other group of two lines, and so forth. Also, the term "alternate" is intended broadly to encompass every nth line, $n \geqq 2$, and the term "alternating line" therefore encompasses every second line, every third line, and so forth.

In certain of the embodiments described above, selected pre-detection receive beams are coherently combined. Coherent combination is discussed extensively in the above-identified U.S. Pat. No. 5,667,373, assigned to the assignee of this invention, and the entirety of the disclosure of this patent is hereby incorporated by reference for its teaching regarding alternative forms of coherent combination.

The methods described above can be used both in situations where a non-linear contrast agent is introduced into the region of interest as well as in situations where the region of interest is maintained free of added non-linear contrast agent. For example, the methods described above can be used during a medical diagnostic examination session in which the subject is maintained free of added non-linear contrast agent during the entire session. In this case, the harmonic components described above are generated by natural processes associated with the propagation of ultrasound through body tissues.

The systems and methods described above can be implemented using a wide variety of hardware. For example, the transmit beamformer **12** and the receive beamformer **18** can be made to operate using any suitable architecture, including both analog and digital architectures. The beamformers **12**, **18** can also be of the simultaneous multi-beam transmit-multi beam receive type, particularly where simultaneous transmit beams are widely spaced.

The transducer array **14** can be a one-dimensional, 1.5 dimensional or 2 dimensional array, flat or curved, and of either constant or varying thickness. The transmit beams can be formed of transmit waveforms of the widest variety of shapes including unipolar and bipolar pulses, with or without smoothly rising and falling envelopes. Sinusoidal, square wave or multi-level square wave techniques can be used. The waveform generator **20** and the focus delay **22** can vary widely in complexity and sophistication. The phase inverter **24** can operate in an analog or digital fashion, and it can be implemented by delays, phase rotations or phase inversions. The controller **26** can be included as part of the transmit beamformer **12**; alternately the phase inverter **24** can be implemented separately from the transmit beamformer **12**. The controller **26** may control the phase inverter **24** without controlling other elements of the system. The line buffer **28** and the summer **30** can be implemented as analog or digital systems, and the line buffer **28** may correspond to a digital memory for multiple receive beams.

In all of the embodiments discussed above, the receive processing is in the same mode for the receive beams that are associated with spatially distinct transmit lines having differing transmit scan parameters. For example, the receive beams associated with spatially distinct transmit beams of differing transmit parameters can both be processed in a B mode processing mode, in a Doppler processing mode, or in other known processing modes.

All of the techniques described above can be implemented along either the azimuthal dimension or the elevation dimension. Similarly, the alternating line techniques described above can be used in both azimuth and elevation in 3D scanning, as described above in conjunction with FIG. **32**. Thus, these techniques are well suited for both two-dimensional (range plus azimuthal or elevation) and three-dimensional imaging. As an example, synthetic aperture techniques can be used in elevation with an articulated one-dimensional array, as described in U.S. patent application Ser. No. 09/282,910 filed Mar. 31, 1999.

The methods described above can be implemented over a full frame of image data or part of a frame, and they can be used with a wide variety of ultrasonic imaging signals including B mode signals, Doppler signals and the like.

The methods described above can also be implemented using M mode techniques, in which a portion of the B mode frame, often a single scan line, is displayed. For example, alternating line techniques can be used to alternate any of the scan parameters discussed above along two adjacent scan lines, and spatially aligned receive beams can then be combined to produce the M mode line.

The methods described above can be implemented using multiple simultaneous transmit beam techniques, with one or more receive beams acquired for each transmit beam.

Though the examples described above emphasize second harmonic components, this invention is not limited to use

with second harmonic signals. As used herein, the term "harmonic" is intended broadly to encompass any non-linear echo signal, including sub-harmonics, fractional harmonics and integral harmonics of 2 and greater.

In certain of the embodiments described above, various receive parameters are alternated from line to line. Many alternatives are possible including alternating receive spectral response (e.g., receive center frequency, receive spectral bandwidth, shape of receive spectral response) from line to line. In several of the embodiments described above, it is important to provide coherent combination of receive beams prior to detection. Of course, coherent combination requires adequate control of receive beam phase on a scan-line to scan-line basis. Related U.S. patent application Ser. No. 09/282,511, filed Mar. 31, 1999, provides one preferred technique for achieving the desired phase alignment.

As indicated above, various embodiments of this invention will obtain various degrees of cancellation of the fundamental components by destructive interference in the composite signal. Thus, the term "destructive interference" is intended broadly to encompass both partial and complete interference.

The present invention can be used with any suitable scan line geometry, including sector, Vector®, and parallel beam geometries, for example.

As used herein, the term "scan parameter" is intended broadly to encompass transmit and/or receive parameters other than beam steering direction and beam origin.

The term "spatially distinct" is intended broadly to encompass transmit lines that are spatially distinct in azimuth, in elevation, or both.

With respect to the embodiments described above that utilize transmit beams which are entirely spatially distinct from one another, it may be desirable to fire additional transmit beams which are spatially aligned with previously fired transmit beams.

The foregoing detailed description has discussed only a few of the many forms that this invention can take. It is therefore intended that the foregoing detailed description be regarded as illustrative rather than limiting. It is only the following claims, including all equivalents, that are intended to define the scope of this invention.

What is claimed is:

1. A medical diagnostic ultrasound imaging method comprising:

(a) transmitting a plurality of spatially distinct ultrasonic transmit beams into a region;

(b) receiving a plurality of receive beams from the region, each receive beam associated with a respective one of the transmit beams; said transmit beams and said associated receive beams comprising at least first and second types of beams which differ in at least one scan parameter other than transmit and receive beam steering direction and beam origin;

(c) combining at least two of the receive beams associated with spatially distinct ones of the transmit beams, said combined receive beams associated with at least one beam of the first type and at least one beam of the second type.

2. The method of claim **1** wherein the at least one scan parameter comprises transmit phase.

3. The method of claim **2** wherein (c) comprises

(c1) coherently combining said at least two of the receive beams prior to detection to enhance a harmonic component thereof; and

(c2) coherently combining said at least two of the receive beams prior to detection to enhance a fundamental component thereof.

4. The method of claim **1** wherein the at least one scan parameter comprises a plurality of scan parameters.

5. The method of claim **1** wherein the at least one scan parameter comprises aperture.

6. The method of claim **5** wherein (b) comprises varying receive aperture between a first receive aperture comprising even transducer elements for the first type of beams and a second receive aperture comprising odd transducer elements for the second type of beams.

7. The method of claim **1** wherein the at least one scan parameter comprises system frequency.

8. The method of claim **1** wherein the at least one scan parameter comprises receive spectral response.

9. The method of claim **1** wherein the at least one scan parameter comprises receive center frequency.

10. The method of claim **1** wherein the at least one scan parameter comprises receive spectral bandwidth.

11. The method of claim **1** wherein the at least one scan parameter comprises transmit focus.

12. The method of claim **1** wherein the at least one scan parameter comprises transmit waveform.

13. The method of claim **1** wherein the at least one scan parameter comprises transmit waveform complex phase angle.

14. The method of claim **1** wherein the at least one scan parameter comprises transmit code.

15. The method of claim **1** wherein the at least one scan parameter comprises pulse inversion polarity sequence.

16. The method of claim **1**, **2**, **11** or **12** wherein the transmit beams transmitted in (a) alternate between the first and second types of beams across the region.

17. The method of claim **1**, **2**, **11** or **12** wherein the receive beams received in (b) alternate between the first and second type of beams across the region.

18. The method of claim **1** wherein a single respective one of the receive beams is received in (b) in response to each of the transmit beams.

19. The method of claim **1** wherein at least two respective ones of the receive beams are received in (b) in response to each of the transmit beams.

20. The method of claim **1** wherein the first and second types of beams comprise transmit beams that differ in at least one scan parameter other than transmit beam steering direction and beam origin.

21. The method of claim **1** wherein the first and second types of beams comprise receive beams that differ in at least one scan parameter other than receive beam steering direction and beam origin.

22. The method of claim **1** wherein (a) comprises the step of transmitting multiple simultaneous transmit beams into the region.

23. The method of claim **1** wherein (a) comprises transmitting the transmit beams over multiple azimuthal coordinates and multiple elevational coordinates.

24. The method of claim **1** further comprising:

(d) forming an M-mode image from at least some of the combined receive beams.

25. The method of claim **1** further comprising:

(d) spatially filtering the combined receive beams in elevation prior to detection.

26. The method of claim **1** further comprising:

(d) applying the combined receive beams to a spatial filter prior to detection, said spatial filter selected from the group consisting of:

a separable azimuth filter, a separable elevation filter, a non-separable range-azimuth filter, a non-separable range-elevation filter, a non-separable azimuth-elevation filter, a non-separable range-azimuth-elevation filter, and combinations thereof.

27. The method of claim 26 wherein the spatial filter comprises constant filter coefficients, said filter coefficients selected from the group consisting of real and complex filter coefficients.

28. The method of claim 26 wherein the spatial filter comprises variable filter coefficients that vary as a function of at least one of range, azimuth and elevation.

29. The method of claim 1 further comprising:

(d) spatially filtering the combined receive beams prior to detection;

(e) coherently combining at least two of the receive beams associated with a common one of the transmit beams; and

wherein (d) comprises spatially filtering the combined receive beams of both steps (c) and (e) prior to detection.

30. The method of claim 1 further comprising combining at least two of the receive beams associated with a common one of the transmit beams.

31. The method of claim 1 wherein (c) comprises coherently combining said at least two of the receive beams prior to detection.

32. The method of claim 1 wherein (c) comprises compounding said at least two of the receive beams subsequent to detection.

33. A medical diagnostic ultrasound imaging system comprising:

means for transmitting a plurality of spatially distinct ultrasonic transmit beams into a region;

means for receiving a plurality of receive beams from the region, each receive beam associated with a respective one of the transmit beams; said transmit beams and said associated receive beams comprising at least first and second types of beams which differ in at least one scan parameter other than transmit and receive beam steering direction and beam origin;

means for combining at least two of the receive beams associated with spatially distinct ones of the transmit beams, said combined receive beams associated with at least one beam of the first type and at least one beam of the second type.

34. The invention of claim 33 wherein the at least one scan parameter comprises transmit phase.

35. The invention of claim 33 wherein the at least one scan parameter comprises aperture.

36. The invention of claim 33 wherein the receiving means comprises means for varying receive aperture between a first receive aperture comprising even transducer elements for the first type of beams and a second receive aperture comprising odd transducer elements for the second type of beams.

37. The invention of claim 33 wherein the at least one scan parameter comprises system frequency.

38. The invention of claim 33 wherein the at least one scan parameter comprises receive spectral response.

39. The invention of claim 33 wherein the at least one scan parameter comprises transmit focus.

40. The invention of claim 33 wherein the at least one scan parameter comprises transmit waveform.

41. The invention of claim 33 wherein the at least one scan parameter comprises transmit waveform complex phase angle.

42. The invention of claim 33 wherein the at least one scan parameter comprises transmit code.

43. The invention of claim 33 wherein the at least one scan parameter comprises pulse inversion polarity sequence.

44. The invention of claim 33, 34, 39 or 40 wherein the transmitting means alternates the transmit beams between the first and second types of beams across the region.

45. The invention of claim 33, 34, 39 or 40 wherein the receiving means alternates the receive beams between the first and second types of beams across the region.

46. The invention of claim 33 wherein the receiving means receives a single respective one of the receive beams in response to each of the transmit beams.

47. The invention of claim 33 wherein the receiving means receives at least two respective ones of the receive beams in response to each of the transmit beams.

48. The invention of claim 33 wherein the first and second types of beams comprise transmit beams that differ in at least one scan parameter other than transmit beam steering direction and beam origin.

49. The method of claim 33 wherein the first and second types of beams comprise receive beams that differ in at least one scan parameter other than receive beam steering direction and beam origin.

50. The invention of claim 33 wherein the transmitting means comprises a multiple simultaneous beam transmitter.

51. The invention of claim 33 wherein the transmitting means comprises means for transmitting the transmit beams arranged in a pattern that extends over multiple azimuthal coordinates and multiple elevational coordinates.

52. The invention of claim 33 further comprising:

means for processing at least some of the combined receive beams to form an M-mode image.

53. The invention of claim 33 or 43 further comprising an elevation filter means for spatially filtering the combined receive beams prior to detection.

54. The invention of claim 33 or 43 further comprising a spatial filter for filtering the combined receive beams prior to detection, the spatial filter selected from the group consisting of:

a separable azimuthal filter, a separable elevation filter, a non-separable range-azimuth filter, a non-separable range-elevation filter, a non-separable azimuth-elevation filter, and a non-separable and range-azimuth elevation filter, and combinations thereof.

55. The invention of claim 54 wherein the spatial filter comprises constant filter coefficients selected from the group consisting of real and complex filter coefficients.

56. The invention of claim 54 wherein the spatial filter comprises variable filter coefficients that vary as a function of at least one of range, azimuth and elevation.

57. The invention of claim 33 or 43 further comprising:

means for spatially filtering the combined receive beams prior to detection; second means for combining at least two of the receive beams associated with a common one of the transmit beams, and wherein the filtering means comprises means for spatially filtering the combined receive beams of both the first-mentioned combining means and the second combining means prior to detection.

58. The invention of claim 33 further comprising means for combining at least two of the receive beams associated with a common one of the transmit beams.

59. The invention of claim 33 wherein the combining means comprises means for combining said at least two of the receive beams prior to detection.

60. The invention of claim 33 wherein the combining means comprises means for compounding said at least two of the receive beams subsequent to detection.

* * * * *

专利名称(译)	具有改善的帧速率的诊断超声成像方法和系统		
公开(公告)号	US6436046	公开(公告)日	2002-08-20
申请号	US09/698995	申请日	2000-10-27
[标]申请(专利权)人(译)	阿库森公司		
申请(专利权)人(译)	ACUSON CORPORATION		
当前申请(专利权)人(译)	ACUSON CORPORATION		
[标]发明人	NAPOLITANO DAVID J COLE CHRISTOPHER R HOLLEY GREGORY L HOSSACK JOHN A BRADLEY CHARLES E PHILLIPS PATRICK		
发明人	NAPOLITANO, DAVID J. COLE, CHRISTOPHER R. HOLLEY, GREGORY L. HOSSACK, JOHN A. BRADLEY, CHARLES E. PHILLIPS, PATRICK		
IPC分类号	G01S15/89 G01S15/00 G01S7/52 A61B8/00		
CPC分类号	G01S7/52039 G01S7/52046 G01S7/52085 G01S7/52095 G01S15/8927 G01S15/8963 G01S15/8977 A61B8/00 G01S15/8959		
优先权	61/198219 1998-11-23 US 61/993395 1997-12-18 US 61/993533 1997-12-18 US		
外部链接	Espacenet USPTO		

摘要(译)
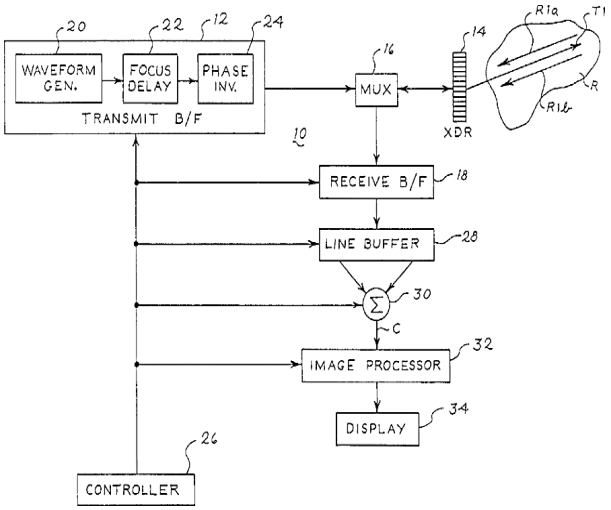
医学诊断超声成像系统从空间上不同的发射波束获取接收波束。接收波束在被成像的区域上以至少第一和第二类型之间的类型交替。第一和第二类型的接收波束在除发射和接收线几何形状之外的至少一个扫描参数方面不同，并且例如可以在发射相位，发射或接收孔径，系统频率，发射焦点，复相角，发射码或传输增益。然后组合与空间上不同的发射波束（包括至少一个第一类型的波束和至少一个第二类型的波束）相关联的接收波束。以这种方式，可以使用许多双脉冲技术，包括例如相位反转技术，合成孔径技术，合成频率技术和合成聚焦技术，同时基本上减少通常与这些技术相关的帧速率损失。