US 20170150944A1

(19) United States

(12) Patent Application Publication

KIM

(10) Pub. No.: US 2017/0150944 A1

(43) Pub. Date: Jun. 1, 2017

(54) **ULTRASOUND DIAGNOSTIC APPARATUS, HOLDER ASSEMBLY, AND METHOD FOR CONTROLLING THE ULTRASOUND DIAGNOSTIC APPARATUS**

(71) Applicant: **SAMSUNG MEDISON CO., LTD.**, Hongcheon-gun (KR)

(72) Inventor: **Chil Su KIM**, Seoul (KR)

(21) Appl. No.: **15/094,409**

(22) Filed: **Apr. 8, 2016**

(30) **Foreign Application Priority Data**

Dec. 1, 2015 (KR) ..... 10-2015-0169725

**Publication Classification**

(51) **Int. Cl.**
*A61B 8/00* (2006.01)

(52) **U.S. Cl.**
CPC ..... ***A61B 8/4444*** (2013.01); ***A61B 8/4433*** (2013.01); ***A61B 8/4477*** (2013.01); ***A61B 8/54*** (2013.01); ***A61B 8/4438*** (2013.01)

(57) **ABSTRACT**

Disclosed is an ultrasound diagnostic apparatus. The ultrasound diagnostic apparatus includes a holder implemented to hold a probe; an object sensor for detecting physical changes around the holder; an electromagnetic wave sensor for detecting electromagnetic waves around the holder; and a controller for determining a port name for a probe held in the holder, based on sensing values from the object sensor and electromagnetic wave sensor.

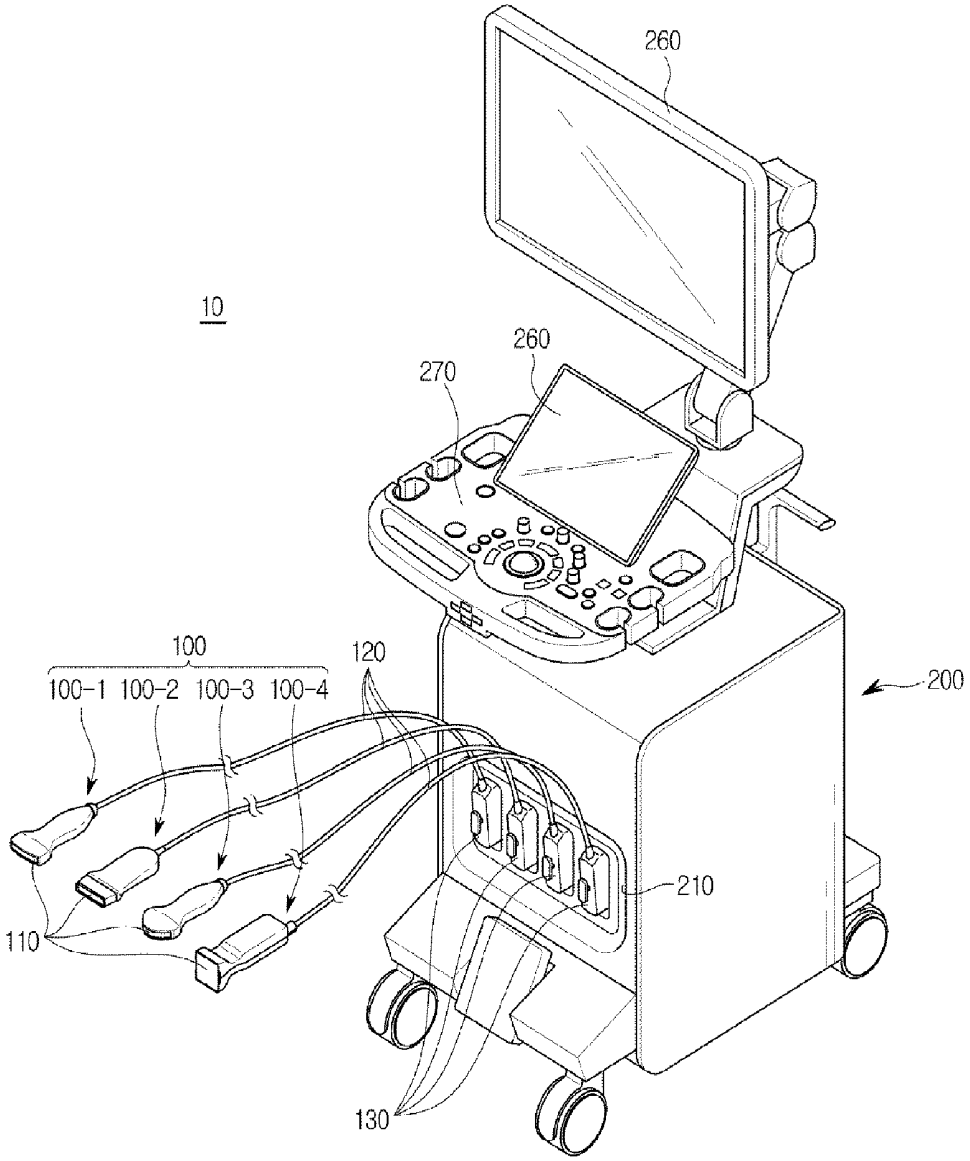

**FIG. 1**

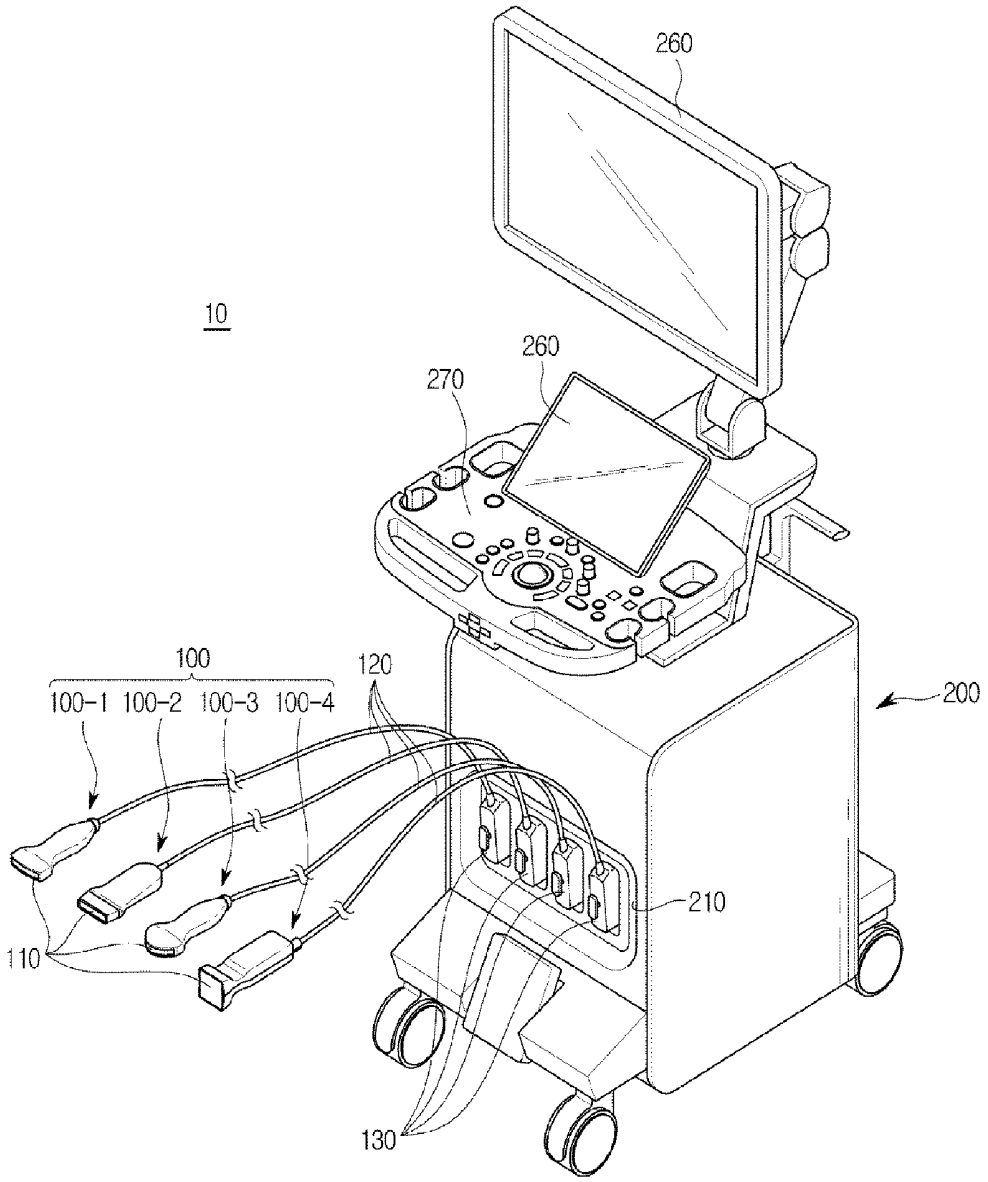

**FIG. 2**

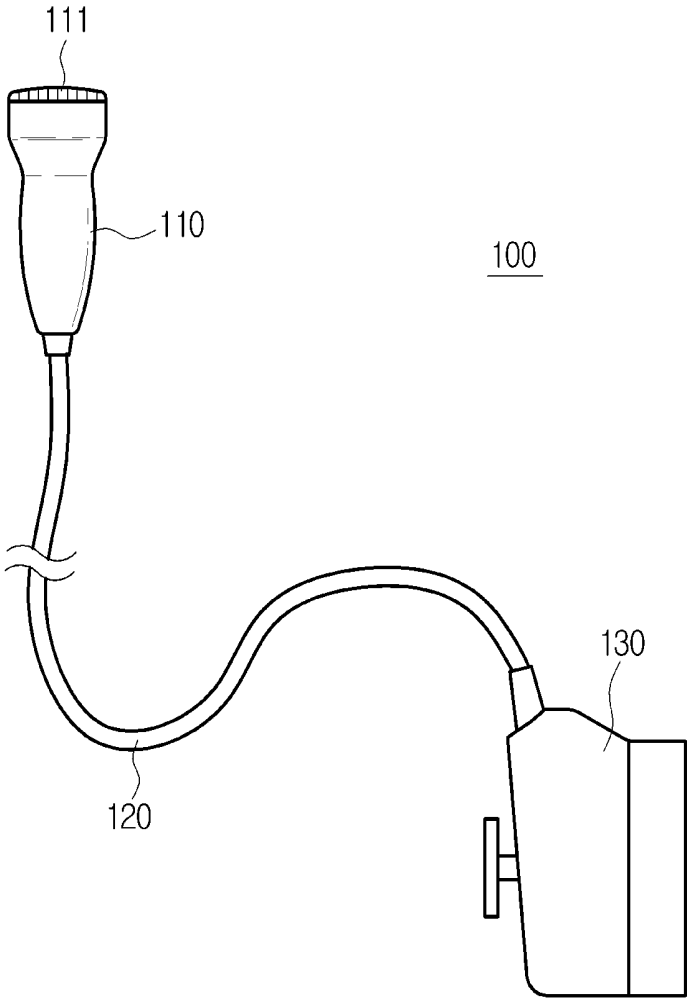

**FIG. 3**

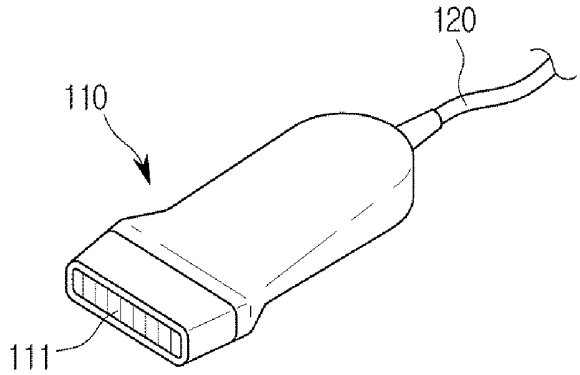


(a)

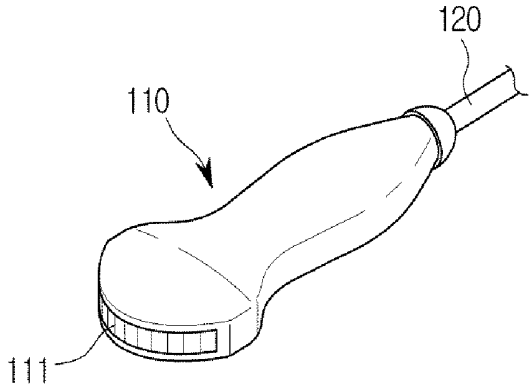


(b)

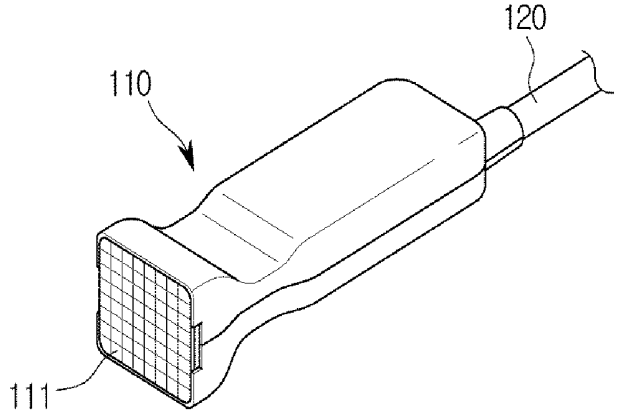


(c)

**FIG. 4**

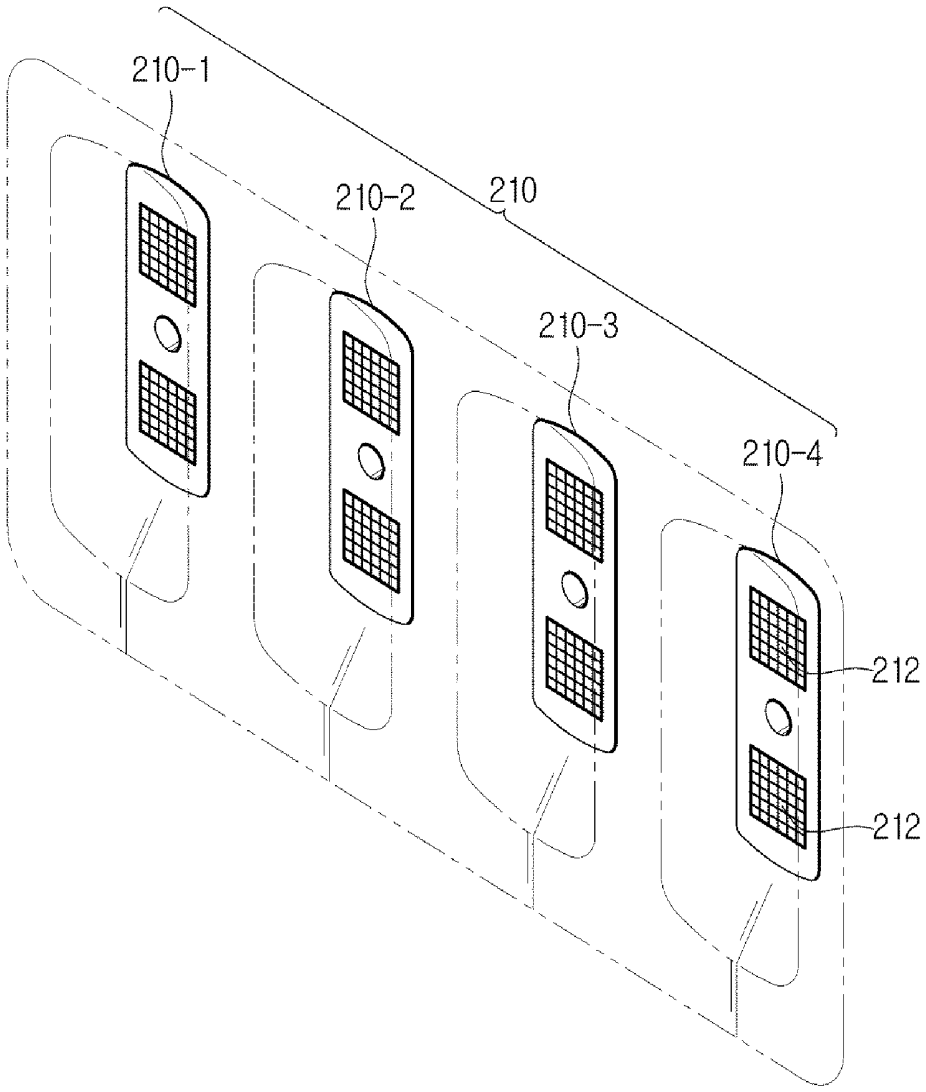

**FIG. 5**

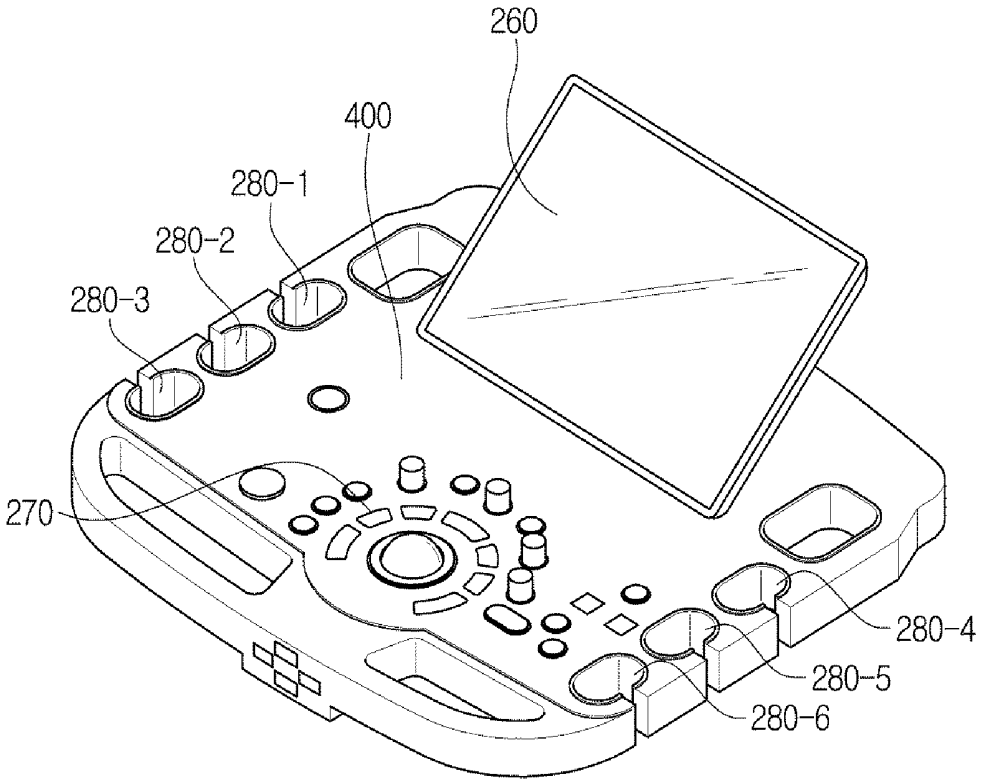

FIG. 6

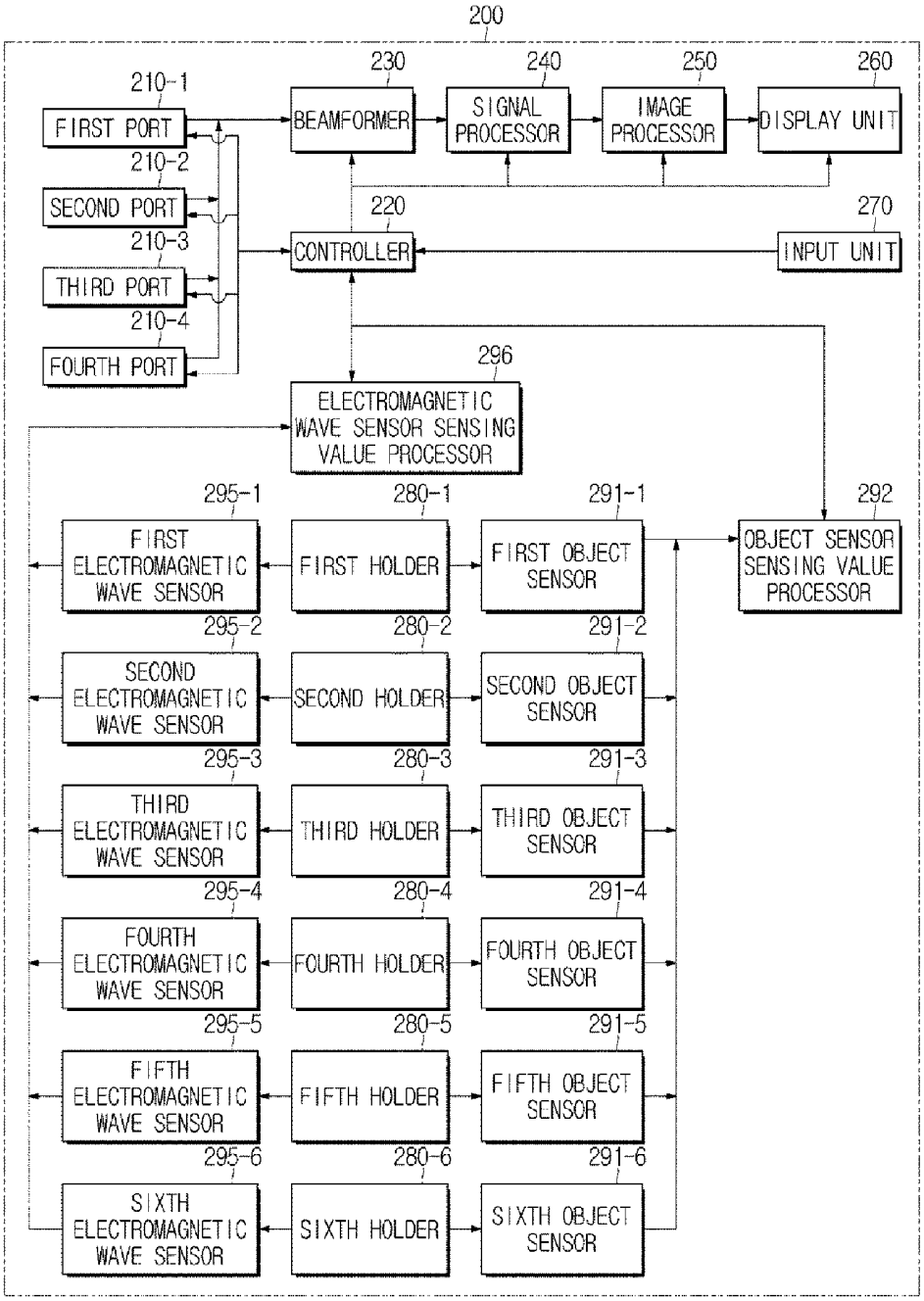
200
210-1
FIRST PORT
210-2
SECOND PORT
210-3
THIRD PORT
210-4
FOURTH PORT
230
BEAMFORMER
240
SIGNAL PROCESSOR
250
IMAGE PROCESSOR
260
DISPLAY UNIT
220
CONTROLLER
270
INPUT UNIT
296
ELECTROMAGNETIC WAVE SENSOR SENSING VALUE PROCESSOR
295-1
FIRST ELECTROMAGNETIC WAVE SENSOR
280-1
FIRST HOLDER
291-1
FIRST OBJECT SENSOR
292
OBJECT SENSOR SENSING VALUE PROCESSOR
295-2
SECOND ELECTROMAGNETIC WAVE SENSOR
280-2
SECOND HOLDER
291-2
SECOND OBJECT SENSOR
295-3
THIRD ELECTROMAGNETIC WAVE SENSOR
280-3
THIRD HOLDER
291-3
THIRD OBJECT SENSOR
295-4
FOURTH ELECTROMAGNETIC WAVE SENSOR
280-4
FOURTH HOLDER
291-4
FOURTH OBJECT SENSOR
295-5
FIFTH ELECTROMAGNETIC WAVE SENSOR
280-5
FIFTH HOLDER
291-5
FIFTH OBJECT SENSOR
295-6
SIXTH ELECTROMAGNETIC WAVE SENSOR
280-6
SIXTH HOLDER
291-6
SIXTH OBJECT SENSOR

FIG. 7A

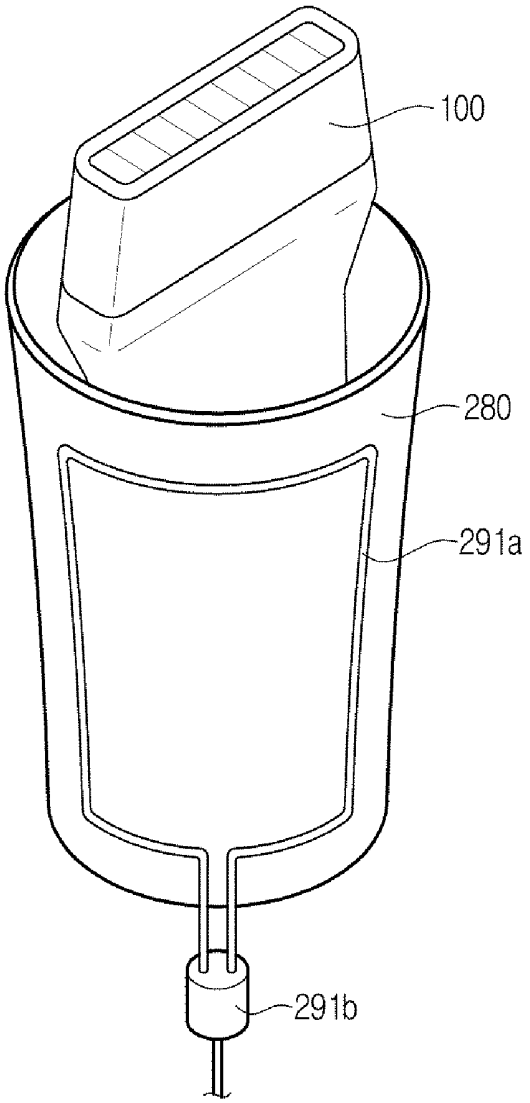

FIG. 7B

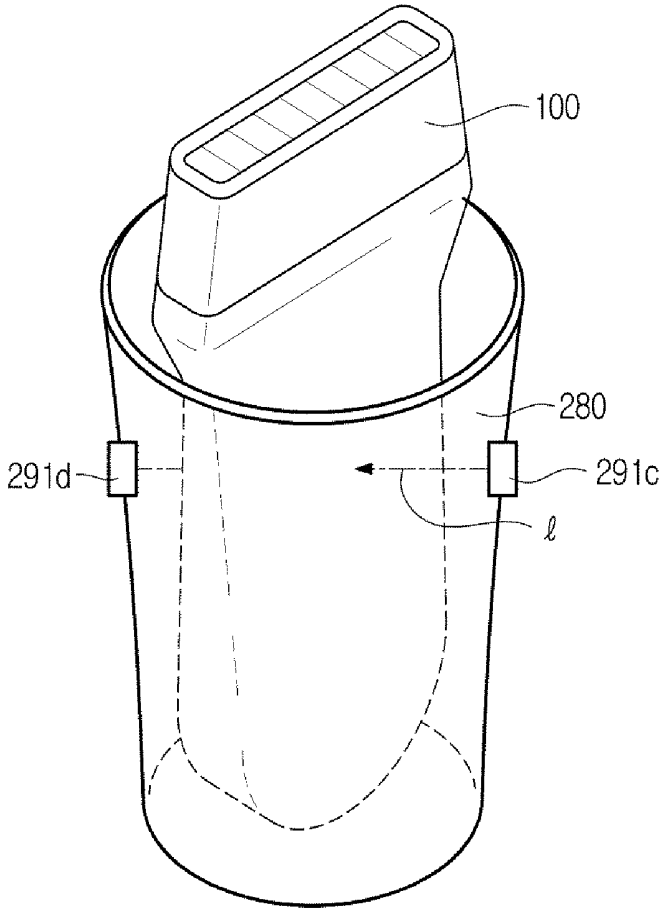

FIG. 7C

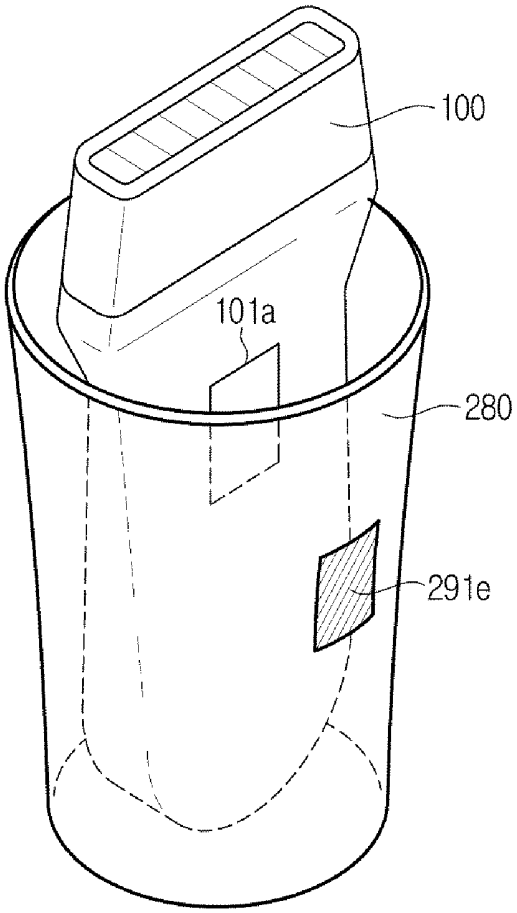

**FIG. 8**

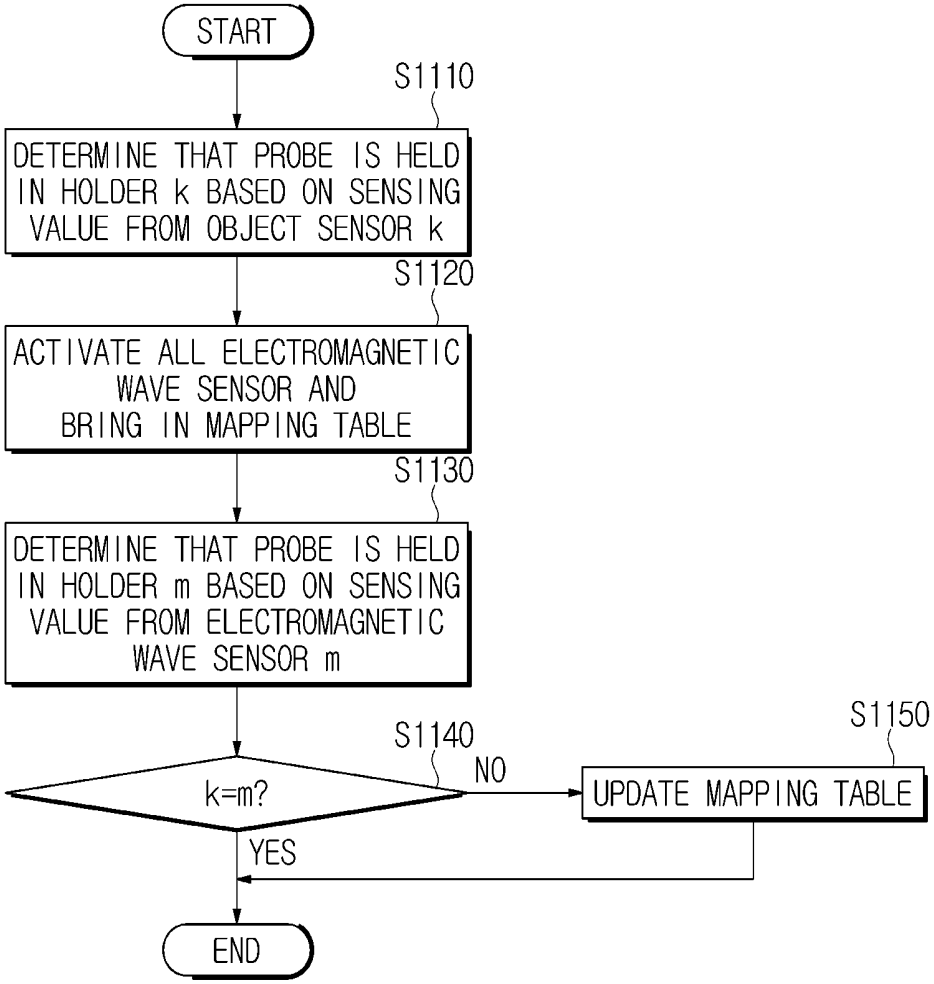
START
S1110
DETERMINE THAT PROBE IS HELD IN HOLDER k BASED ON SENSING VALUE FROM OBJECT SENSOR k
S1120
ACTIVATE ALL ELECTROMAGNETIC WAVE SENSOR AND BRING IN MAPPING TABLE
S1130
DETERMINE THAT PROBE IS HELD IN HOLDER m BASED ON SENSING VALUE FROM ELECTROMAGNETIC WAVE SENSOR m
S1140
k=m?
NO
S1150
UPDATE MAPPING TABLE
YES
END

**FIG. 9**

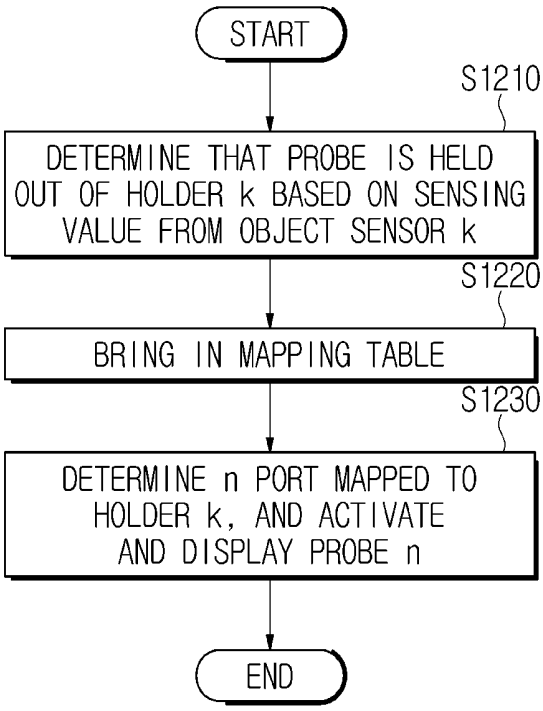
START
S1210
DETERMINE THAT PROBE IS HELD OUT OF HOLDER k BASED ON SENSING VALUE FROM OBJECT SENSOR k
S1220
BRING IN MAPPING TABLE
S1230
DETERMINE n PORT MAPPED TO HOLDER k, AND ACTIVATE AND DISPLAY PROBE n
END

FIG. 10

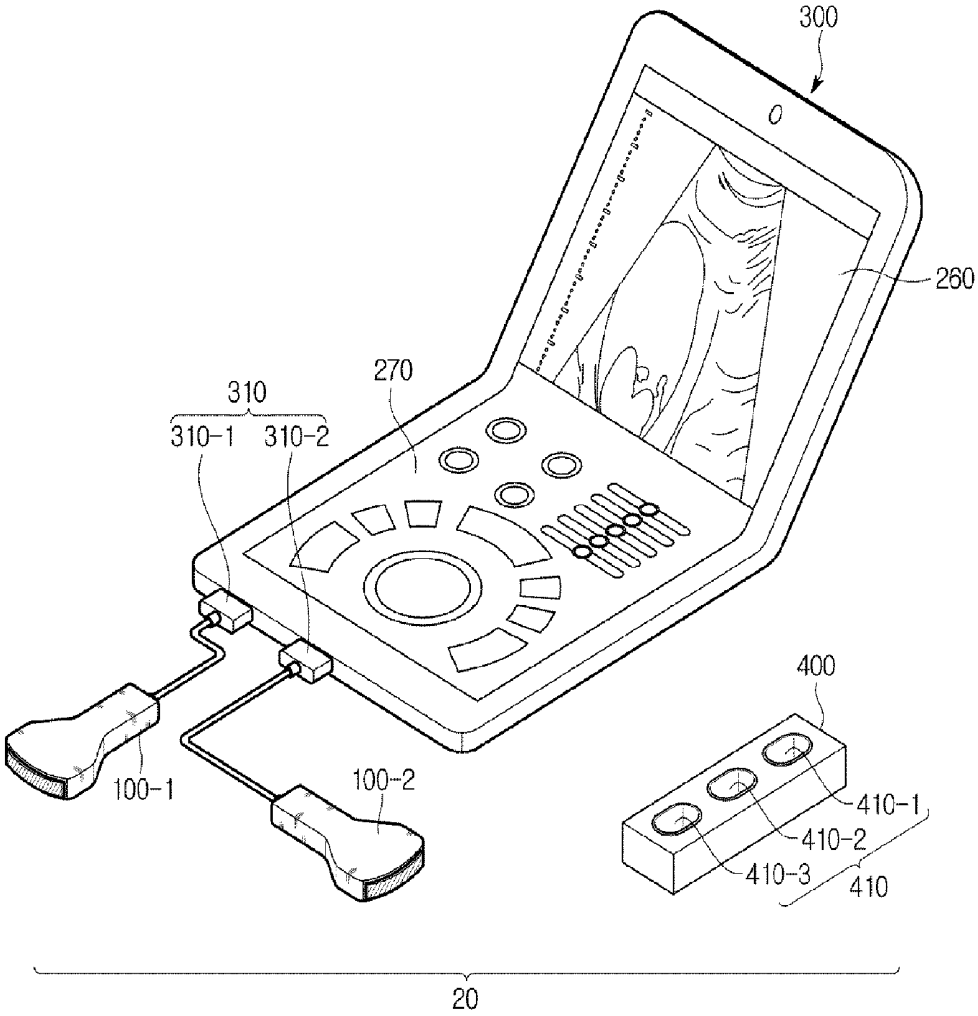

FIG. 11

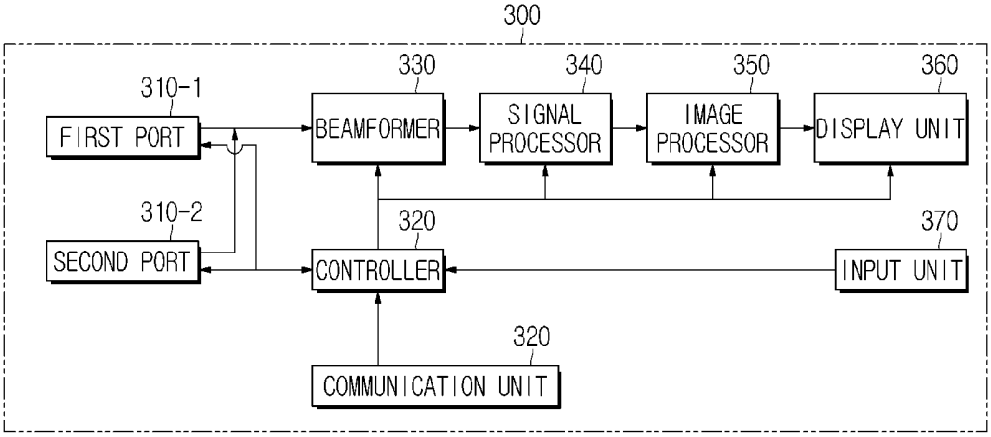
300
310-1
FIRST PORT
310-2
SECOND PORT
330
BEAMFORMER
340
SIGNAL PROCESSOR
350
IMAGE PROCESSOR
360
DISPLAY UNIT
320
CONTROLLER
370
INPUT UNIT
320
COMMUNICATION UNIT

FIG. 12

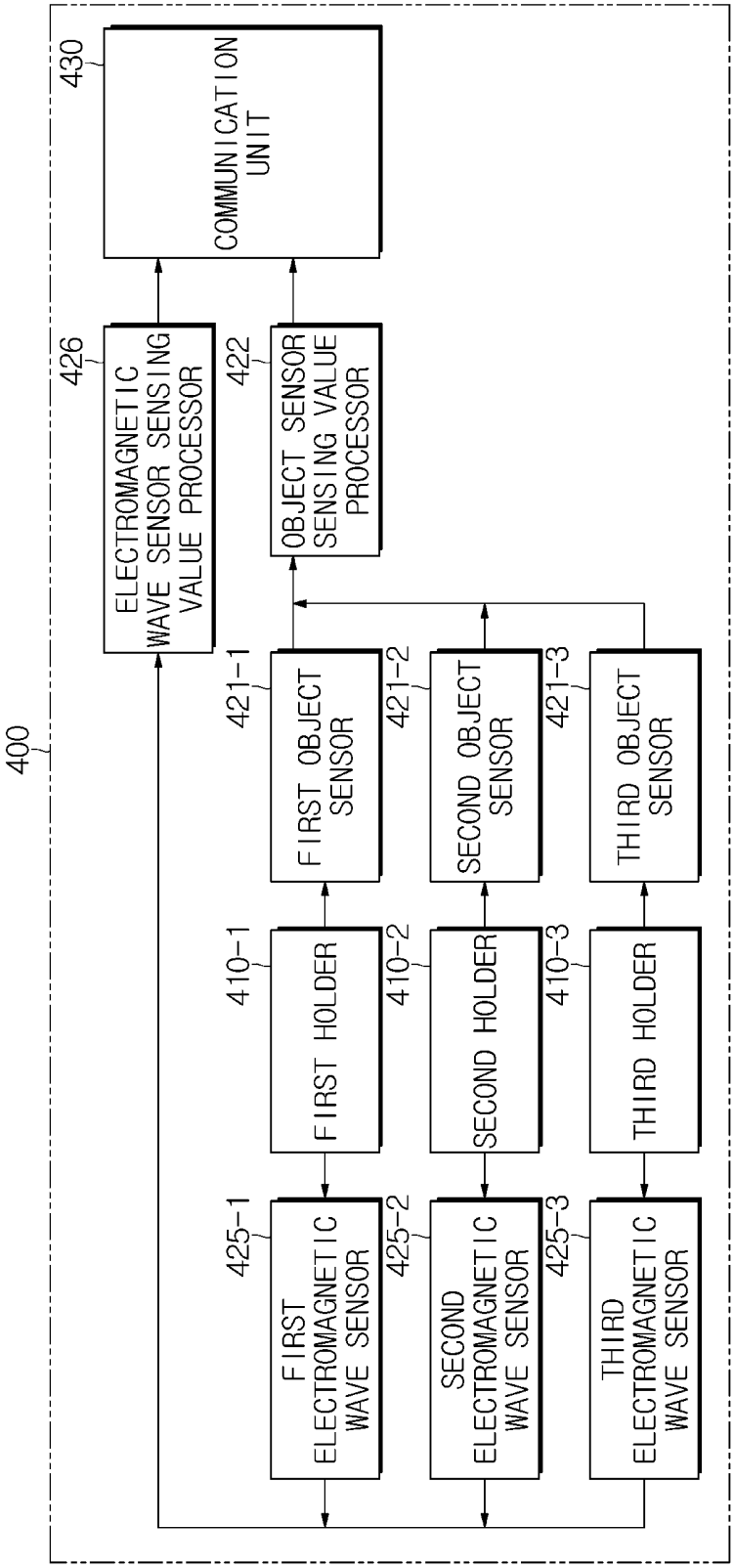
400
426
ELECTROMAGNETIC WAVE SENSOR SENSING VALUE PROCESSOR
422
OBJECT SENSOR SENSING VALUE PROCESSOR
430
COMMUNICATION UNIT
421-1
FIRST OBJECT SENSOR
421-2
SECOND OBJECT SENSOR
421-3
THIRD OBJECT SENSOR
410-1
FIRST HOLDER
410-2
SECOND HOLDER
410-3
THIRD HOLDER
425-1
FIRST ELECTROMAGNETIC WAVE SENSOR
425-2
SECOND ELECTROMAGNETIC WAVE SENSOR
425-3
THIRD ELECTROMAGNETIC WAVE SENSOR

# ULTRASOUND DIAGNOSTIC APPARATUS, HOLDER ASSEMBLY, AND METHOD FOR CONTROLLING THE ULTRASOUND DIAGNOSTIC APPARATUS

## CROSS-REFERENCE TO RELATED APPLICATION(S)

**[0001]** This application claims the benefit under 35 U.S.C. §119(a) of a Korean patent application filed on Dec. 1, 2015 in the Korean Intellectual Property Office and assigned Serial No. 10-2015-0169725, the entire disclosure of which is incorporated hereby incorporated by reference.

## BACKGROUND

**[0002]** 1. Field

**[0003]** The present disclosure relates to an ultrasound diagnostic apparatus, holder assembly, and method for controlling the ultrasound diagnostic apparatus.

**[0004]** 2. Description of the Related Art

**[0005]** An ultrasound diagnostic apparatus is a device for transmitting ultrasound from the surface of a subject toward a target point of the inside of the subject, and obtaining tomograms of soft tissue or images about blood flows in an invasive way by receiving reflected echo ultrasound.

**[0006]** The ultrasound diagnostic apparatus is widely used because it is compact and inexpensive, and is able to display diagnostic images in real time, as compared with X-ray devices, Computerized Tomography (CT) scanners, Magnetic Resonance Imaging (MRI) devices, etc.

**[0007]** The ultrasound diagnostic apparatus includes a probe for transmitting ultrasound to a subject and receiving echo ultrasound reflected from the subject to obtain an ultrasound image of the subject.

**[0008]** There may be multiple probes equipped in the ultrasound diagnostic apparatus, and each probe may be coupled with a port of the ultrasound diagnostic apparatus over a wireless communication network or via a cable. Each probe may be held in a holder equipped in the ultrasound diagnostic apparatus.

**[0009]** Typically, if the user selects one of the plurality of probes held in a holder, the user has to manually type in which port the selected probe corresponds to. For example, in a case that there are first and second holders equipped in the ultrasound diagnostic apparatus and that the user selects a probe held in the second holder, the user has to type in whether the probe held in the second holder is coupled with a first port or a second port directly to the ultrasound diagnostic apparatus.

## SUMMARY

**[0010]** The present disclosure provides an ultrasound diagnostic apparatus and method for controlling the same, by which to automatically determine a port coupled with each probe no matter which one of a plurality of holders the probe is held in.

**[0011]** The present disclosure also provides an ultrasound diagnostic apparatus and method for controlling the same, by which a port coupled with each probe is appropriately determined.

**[0012]** The present disclosure also provides a holder assembly to create a sensing value required for an ultrasound diagnostic apparatus to automatically determine a port coupled with each probe.

**[0013]** In accordance with an aspect of the present disclosure, an ultrasound diagnostic apparatus is provided. The ultrasound diagnostic apparatus includes a holder implemented to hold a probe; an object sensor for detecting physical changes around the holder; an electromagnetic wave sensor for detecting electromagnetic waves around the holder; and a controller for determining a port name for a probe held in the holder, based on sensing values from the object sensor and electromagnetic wave sensor.

**[0014]** The object sensor may include a conductor sensor arranged on or around the holder, and the conductor sensor may detect a change in impedance or resonance frequency.

**[0015]** The object sensor may include a photo interrupter arranged on or around the holder, and he photo interrupter may include a light source for irradiating light into the holder and a light receiver for receiving the light.

**[0016]** The object sensor may include a magnetic sensor.

**[0017]** The object sensor may include a capacitance sensor, and the capacitance sensor may detect a change in impedance or resonance frequency.

**[0018]** The electromagnetic wave sensor may include an Electro-Magnetic Interference (EMI) sensor.

**[0019]** The controller may map the port name and a holder name of the holder.

**[0020]** The ultrasound diagnostic apparatus may further include a sensing value processor for determining whether a probe is held in or out of a holder, based on a sensing value from the object sensor.

**[0021]** The controller may determine a port name mapped to a holder name of a holder of which a probe is held out, and activate a probe that corresponds to the mapped port name.

**[0022]** The ultrasound diagnostic apparatus may further include a display unit, wherein the controller may determine a port name mapped to a holder name of a holder of which a probe is held out, and wherein the display unit may display the holder name and the mapped port name.

**[0023]** The same number of the object sensors and electromagnetic wave sensors as the number of the holders may be arranged.

**[0024]** If the sensing value processor determines that a probe is held in a first holder based on a sensing value from the object sensor, the controller may update a mapping table based on a sensing value from the electromagnetic wave sensor.

**[0025]** The controller may stop operation of a probe when the probe is held in a holder.

**[0026]** In accordance with another aspect of the present disclosure, a holder assembly is provided. The holder assembly includes a holder implemented to hold a probe; an object sensor for detecting physical changes around the holder; an electromagnetic wave sensor for detecting electromagnetic waves around the holder; and a sensing value processor for determining whether a probe is held in or held out, based on sensing values from the object sensor and electromagnetic wave sensor.

**[0027]** The holder assembly may further include a communication unit for sending a result of determination of the controller to a main body.

**[0028]** The object sensor may include a conductor sensor arranged on or around the holder, and the conductor sensor may detect a change in impedance or resonance frequency.

**[0029]** The object sensor may include a photo interrupter arranged on or around the holder, and he photo interrupter

may include a light source for irradiating light into the holder and a light receiver for receiving the light.

**[0030]** The object sensor may include a magnetic sensor.

**[0031]** In accordance with another aspect of the present disclosure, a method for controlling an ultrasound diagnostic apparatus is provided. The methods includes detecting physical changes around a holder; detecting electromagnetic waves around the holder; and determining a port name for a probe held in the holder, based on the physical change and the electromagnetic wave.

**[0032]** Detecting physical changes around a holder may include determining whether the probe is held in or held out.

**[0033]** The method may further include activating the probe corresponding to the holder based on an existing stored mapping table, if it is determined that the probe is held out of the holder.

**[0034]** Other aspects, advantages, and salient features of the disclosure will become apparent to those skilled in the art from the following detailed description, which, taken in conjunction with the annexed drawings, discloses exemplary embodiments of the disclosure.

## BRIEF DESCRIPTION OF THE DRAWINGS

**[0035]** The above and other features and advantages of the present disclosure will become more apparent by describing in detail exemplary embodiments thereof with reference to the attached drawings in which:

**[0036]** FIG. **1** is an exterior view of an ultrasound diagnostic apparatus, according to an embodiment of the present disclosure;

**[0037]** FIG. **2** is an exterior view of a probe;

**[0038]** FIG. **3** shows various probes in different shapes;

**[0039]** FIG. **4** is an enlarged view of a plurality of ports equipped in a main body;

**[0040]** FIG. **5** is an enlarged view of a plurality of holders equipped in a main body;

**[0041]** FIG. **6** is a control block diagram of a main body, according to an embodiment of the present disclosure;

**[0042]** FIGS. **7**A to **7**C show various embodiments of an object sensor equipped in a holder;

**[0043]** FIG. **8** is a flowchart illustrating a general method for controlling an ultrasound diagnostic apparatus with a probe held in a holder, according to an embodiment of the present disclosure;

**[0044]** FIG. **9** is a flowchart illustrating a general method for controlling an ultrasound diagnostic apparatus with a probe held out of a holder, according to an embodiment of the present disclosure;

**[0045]** FIG. **10** is an exterior view of an ultrasound diagnostic apparatus, according to another embodiment of the present disclosure; and

**[0046]** FIGS. **11** and **12** are control block diagrams of an ultrasound diagnostic apparatus, according to embodiments of the present disclosure.

**[0047]** Throughout the drawings, like reference numerals will be understood to refer to like parts, components, and structures.

## DETAILED DESCRIPTION

**[0048]** The present disclosure will now be described more fully with reference to the accompanying drawings, in which exemplary embodiments of the disclosure are shown. The disclosure may, however, be embodied in many different forms and should not be construed as being limited to the embodiments set forth herein;

**[0049]** rather, these embodiments are provided so that this disclosure will be thorough and complete, and will fully convey the concept of the disclosure to those skilled in the art. Like reference numerals in the drawings denote like elements, and thus their description will be omitted. In the description of the present disclosure, if it is determined that a detailed description of commonly-used technologies or structures related to the embodiments of the present disclosure may unnecessarily obscure the subject matter of the invention, the detailed description will be omitted. It will be understood that, although the terms first, second, third, etc., may be used herein to describe various elements, components, regions, layers and/or sections, these elements, components, regions, layers and/or sections should not be limited by these terms. These terms are only used to distinguish one element, component, region, layer or section from another region, layer or section.

**[0050]** Embodiments of an ultrasound diagnostic apparatus and method for controlling the same will be described in detail with reference to accompanying drawings.

**[0051]** FIG. **1** is an exterior view of an ultrasound diagnostic apparatus, according to an embodiment of the present disclosure, FIG. **2** is an exterior view of a probe, FIG. **3** shows various probes in different shapes, FIG. **4** is an enlarged view of a plurality of ports equipped in a main body, and FIG. **5** is an enlarged view of a plurality of holders equipped in a main body.

**[0052]** Referring to FIG. **1**, an ultrasound diagnostic apparatus **10** may include a probe **100** and a main body **200**. The probe **100** shown in FIG. **2** may be one of a plurality of probes **100-1** to **100-4** shown in FIG. **1**.

**[0053]** The probe **100** may transmit ultrasound to a subject, and receive and convert echo ultrasound reflected from the subject to an electric signal (hereinafter, referred to as an ultrasound signal).

**[0054]** The main body **200** may be coupled with the plurality of probes **100-1** to **100-4** through at least one port **210**. The plurality of probes **100-1** to **100-4** that may be coupled with the main body **200** may include first to fourth probes **100-1**, **100-2**, **100-3**, and **100-4**.

**[0055]** The main body **200** may create an ultrasound image based on the ultrasound signal received from one of the first to fourth probes **100-1** to **100-4**.

**[0056]** The main body **200** may be a workstation having a display unit **260** and an input unit **270**, and may be coupled with the first to fourth probes **100-1** to **100-4**.

**[0057]** There may be a plurality of display units **260** and input units **270** equipped in the main body **200**.

**[0058]** Features and operation methods of the first to fourth probes **100-1** to **100-4** will be described in detail in connection with FIG. **2**. For convenience of explanation, the probe **100** refers to each of the first to fourth probes **100-1** to **100-4**, and may be one of the first to fourth probes **100-1** to **100-4**.

**[0059]** The probe **100** may include a transducer **110** for transmitting/receiving ultrasound, a probe connector **130** for transmitting/receiving signals to/from the main body **200**, and a cable **120** connecting the transducer **110** and the probe connector **130**.

**[0060]** The transducer **110** may transmit/receive ultrasound to/from a subject to obtain an ultrasound image of the inside of the subject.

**[0061]** Specifically, the transducer **110** may include a transducer module **111** for converting between electric signals and vibration (or acoustic) energy, which may use vibrators, such as piezoelectrics (not shown) to transmit ultrasound to the subject and receive echo ultrasound reflected from the subject.

**[0062]** If the number of the vibrators is 64 to 256, coupling elements as many as the number of the vibrators are required in coupling the probe **100** and the main body **200**.

**[0063]** The object may be, but not exclusively, a living body of a human or animal, an organ in the living body, such as blood vessels, bones, muscles, etc., or anything whose internal structure may be imaged by the ultrasound diagnostic apparatus **10**.

**[0064]** Referring to FIG. **3**, the transducer **110** may be implemented as a linear transducer having the linear surface as shown in (a) of FIG. **3**, as a convex transducer having the convex and curved surface as shown in (b) of FIG. **3**, or as a matrix transducer as shown in (c) of FIG. **3**, depending on an arrangement form of the transducer module **111**. However, the transducer **110** is not limited thereto, and may be implemented in any other form than those shown in FIG. **3**, which is known to an ordinary skill in the art, such as a phased array transducer.

**[0065]** The transducer **110** is connected to an end of the cable **120**, the other end of which may be connected to the probe connector **130**.

**[0066]** The probe connector **130** is connected to a port of the main body **200** for transmitting/receiving electric signals with the main body **200**.

**[0067]** The probe connector **130** may be implemented as a connector combined with a port of the main body **200** implemented as a female connector.

**[0068]** Referring to FIG. **4**, there may be a plurality of ports **210**; **210-1** to **210-4** formed on the main body **200**, and each port **210** may include a socket **212** to be coupled with pins of the probe connector **130** of the probe **100**.

**[0069]** The plurality of ports **210-1** to **210-4** equipped in the main body **200** may include first to fourth ports **210-1** to **210-4**. A probe **100** coupled with the first port **210-1** is called the first probe **100-1**; a probe **100** coupled with the second port **210-2** is called the second probe **100-2**; a probe **100** coupled with the third port **210-3** is called the third probe **100-3**; a probe **100** coupled with the fourth port **210-4** is called the fourth probe **100-4**.

**[0070]** An ultrasound signal generated by each probe **100** may be transmitted to the main body **200** through the port **210** coupled with each probe **100**.

**[0071]** Furthermore, referring to FIG. **5**, at least one holder **280** may be arranged in the main body **200** to hold the probe **100**. There may be a plurality of holders **280** arranged independently of the number of the probes **100** or the number of the ports **210**.

**[0072]** Assume herein that first to sixth holders **280-1** to **280-6** are arranged in the body **200**.

**[0073]** The first to sixth holders **280-1** to **280-6** may be located around the display unit **260** or input unit **270** of the main body **200**, as shown in FIG. **5**, but their locations are not limited thereto.

**[0074]** The main body **200** will be described in more detail in connection with FIGS. **6**, **7**A, **7**B, and **7**C. FIG. **6** is a control block diagram of a main body, according to an embodiment of the present disclosure.

**[0075]** Referring to FIG. **6**, the main body **200** may include first to fourth ports **210-1** to **210-4**, a controller **220**, a beamformer **230**, a signal processor **240**, an image processor **250**, a display unit **260**, an input unit **270**, first to sixth holders **280-1** to **280-6**, first to sixth object sensors **291-1** to **291-6**, an object sensor sensing value processor **292**, first to sixth electromagnetic wave sensors **295-1** to **295-6**, and an electromagnetic wave sensor sensing value processor **296**.

**[0076]** Although FIG. **6** shows that the main body **200** includes four ports **210-1** to **210-4** and six holders **280-1** to **280-6**, the number of ports **210** and holders **280** is not limited thereto.

**[0077]** Upon reception of an ultrasound signal from the probe **100** connected to at least one or more ports among the first to fourth ports **210-1** to **210-4**, the at least one or more ports may forward the ultrasound signal to the beamformer **230**.

**[0078]** The first to fourth ports **210-1** to **210-4** may include sockets **212** to be electrically coupled with the probe **100**.

**[0079]** The controller **220** may generate control signals to control the respective elements of the probe **100** and main body **200**.

**[0080]** For example, the controller **220** may generate control signals to operate the probe **100**, or generate control signals to control the beamformer **230**, the signal processor **240**, the image processor **250**, and the display unit **260** based on ultrasound signals received from the probe **100**, and process various information obtained by the probe **100** according to a stored program.

**[0081]** Furthermore, in an embodiment, the controller **220** may map each of the first to fourth ports **210-1** to **210-4** to one of the first to sixth holders **291-1** to **291-6** based on information received from the electromagnetic wave sensor sensing value processor **296** and the object sensor sensing value processor **292**. A plurality of port names, e.g., port numbers, and holder names, e.g., holder numbers corresponding to the port names may be stored in a mapping table. An operation procedure of the controller **220** will be described later in detail.

**[0082]** The controller **220** may include a memory for storing a program and data, e.g., mapping table, to control the respective elements of the probe **100** and main body **200**, and a processor for controlling the probe **100** and main body **200** according to the program and data stored in the memory.

**[0083]** The beamformer **230** is a device to give a proper time delay to ultrasound for transmission or received echo ultrasound, in order for the ultrasound produced by the transducer of the probe **100** to be focused on a target point of the subject at a desired moment of time, or for the echo ultrasound bounced off the target point of the subject to overcome a time difference in arriving the transducer.

**[0084]** In the ultrasound diagnostic apparatus **10**, the beamformer **230** may be included in the main body **200** that corresponds to a back-end as shown in FIG. **6**, or may be included in the probe **100** that corresponds to a front-end. Embodiments of the beamformer **230** are not limited thereto, and all or parts of elements of the beamformer **230** may be included in some parts of the front-end and back-end. However, for convenience of explanation, it is assumed that the beamformer **230** is included in the main body **200**.

**[0085]** The signal processor **240** may convert a signal received from the beamformer **230** into a format suitable for

image processing. For example, the signal processor **240** may perform filtering to eliminate noise outside a desired frequency band.

**[0086]** Furthermore, the signal processor **240** may be implemented by a digital signal processor (DSP), and may generate ultrasound image data by performing envelope detection to detect the amplitude of the echo ultrasound based on the signal received from the beamformer **230**.

**[0087]** The image processor **250** may generate an image for the user, e.g., a doctor or patient, to visually check the inside of a subject, e.g., a human body, based on the ultrasound image data generated by the signal processor **240**.

**[0088]** The image processor **250** may send the display unit **260** an ultrasound image generated using the ultrasound image data.

**[0089]** In addition, the image processor **250** may further perform extra image processing on the ultrasound image in some embodiments. For example, the image processor **250** may further perform post image processing, such as compensating for or readjusting contrast, brightness, or sharpness of the ultrasound image.

**[0090]** Such extra image processing of the image processor **250** may be performed according to a predetermined setting, or in response to a user instruction or command input through the input unit **270**.

**[0091]** The display unit **260** may display the ultrasound image generated by the image processor **250**, thereby enabling the user to visually examine the internal structure or tissue of the subject.

**[0092]** The input unit **270** may receive predetermined instructions or commands from the user for controlling the ultrasound diagnostic apparatus **10**. The input unit **270** may also include a user interface, such as e.g., a keyboard, a mouse, a trackball, a touch screen, a paddle, etc.

**[0093]** For example, the input unit **270** may receive instructions to operate or freeze operation of any of the plurality of probes **100-1** to **100-6**.

**[0094]** The first to sixth holders **280-1** to **280-6** may be able to hold the probe **100**.

**[0095]** In a case the main body **200** is coupled with the first to fourth probes **100-1** to **100-4** through the first to fourth ports **210-1** to **210-4**, the first to sixth holders **280-1** to **280-6** may be able to hold the first to fourth probes **100-1** to **100-4**. In this case, a holder **280** may hold one probe **100**.

**[0096]** The first to sixth holders **280-1** to **280-6** may each be equipped with an object sensor **291** and an electromagnetic wave sensor **295**. In this case, there may be the same number of object sensors **291** and electromagnetic wave sensors **295** as the number of holders **280**, and the object sensor **291** and electromagnetic wave sensor **295** may be located on or around the holder **280**.

**[0097]** The object sensor **291** may detect physical changes around the holder **280**. For example, the object sensor **291** may be a conductor sensor, an infrared sensor, an Light Emitting Diode (LED) sensor, or a magnetic sensor.

**[0098]** If the object sensor **291** is the conductor sensor, the conductor sensor may detect different impedance or a resonance frequency depending on whether the holder **280** holds the probe **100**. In this regard, the object sensor sensing value processor **292** may determine whether the probe **100** is held in based on the impedance or resonance frequency, i.e., a sensing value detected by the conduct sensor.

**[0099]** Various embodiments of the object sensor **291** will be described later in connection with FIGS. **7**A to **7**C.

**[0100]** The object sensor sensing value processor **292** may determine which one of the first to sixth holders **210-1** to **210-6** the probe **100** is held in or held out, based on sensing values from the plurality of object sensors **291-1** to **291-6**.

**[0101]** The electromagnetic wave sensor **295** may detect electromagnetic waves produced around the holder **280**. For example, the electromagnetic wave sensor **295** may be an Electro-Magnetic Interference (EMI) sensor.

**[0102]** In the case the electromagnetic wave sensor **292** is the EMI sensor, the EMI sensor may detect different electromagnetic wave signals depending on whether the holder **280** holds the probe **100** and whether the probe **100** held in the holder **280** is activated. In this regard, the electromagnetic wave sensor sensing value processor **296** may determine whether the probe **100** is activated based on the electromagnetic wave signals detected by the EMI sensor.

**[0103]** Specifically, if the probe **100** is held in the holder **280** while being activated, the EMI sensor may detect electromagnetic waves, and otherwise if the probe **100** held in the holder **280** is not activated, the EMI sensor may not detect any electromagnetic wave.

**[0104]** The electromagnetic wave sensor sensing value processor **296** may determine which one of the first to sixth holders **210-1** to **210-6** the probe **100** is held in while being activated, based on sensing values from the plurality of electromagnetic wave sensors **295-1** to **295-6**.

**[0105]** In some embodiments, the controller **220**, the object sensor sensing value processor **292**, and the electromagnetic wave sensor sensing value processor **296** may be implemented to have separate memories and processors or implemented with a single memory and a single processor. If the object sensor sensing value processor **292** and the electromagnetic wave sensor sensing value processor **296** are implemented with a single memory and a single processor, a single sensing value processor may perform functions of the object sensor sensing value processor **292** and the electromagnetic wave sensor sensing value processor **296**.

**[0106]** FIGS. **7**A to **7**C show various embodiments of an object sensor equipped in a holder.

**[0107]** Referring to FIG. **7**A, the object sensor **291** may be implemented as a conduct sensor, which may include a wire **291***a* attached to the holder **280** and an impedance measurer **291***b*. The impedance measurer **291***b* may measure different impedance or resonance frequency depending on whether the probe **100** is held in or out of the holder **280**, because the probe **100** may be enclosed by a copper material.

**[0108]** Alternatively, referring to FIG. **7**B, the object sensor **291** may be implemented as a photo interrupter , which may include any sensor, such as an infrared sensor, an LED sensor, etc., that includes a light source **291***c* and a light receiver **291***d*. If the probe **100** is held in the holder **280**, the probe **100** cuts off light (1) irradiated from the light source **291***c*, and the light receiver **291***d* may not detect light. Otherwise if the probe **100** is held out of the holder **280**, the light (1) irradiated from the light source **291***c* may be detected by the light receiver **291***d*.

**[0109]** Alternatively, referring to FIG. **7**C, the object sensor **291** may be implemented as a magnetic sensor **291***e*. The magnetic sensor **291***e* may determine whether the probe **100** is held in or held out of the holder **280** by detecting a magnetic substance **101***a* attached to the probe **100**.

**[0110]** Besides, the object sensor **291** may be implemented as a capacitance sensor and may determine whether the probe **100** is held in or held out of the holder **280** by detecting impedance, i.e., capacitance, or resonance frequency, but is not limited thereto.

**[0111]** The electromagnetic wave sensor **292** may be implemented as an EMI sensor and attached onto or around the holder **280** to detect a signal, i.e., an electromagnetic wave signal based on whether the probe **100** is held in the holder **280**.

**[0112]** The object sensor **291** and electromagnetic wave sensor **292** may be separately arranged on each holder **280**, or may be arranged as a single sensor to detect an object and electromagnetic waves.

**[0113]** In the following description, object sensors **291** equipped in the first to sixth holders **280-1** to **280-6** will be called first to sixth object sensors **291-1** to **291-6**, and electromagnetic wave sensors **295** equipped in the first to sixth holders **280-1** to **280-6** will be called first to sixth electromagnetic wave sensors **295-1** to **295-6**.

**[0114]** FIG. **8** is a flowchart illustrating a general method for controlling an ultrasound diagnostic apparatus with a probe held in a holder, according to an embodiment of the present disclosure.

**[0115]** Reference numerals as will be cited in describing FIG. **8** are the same reference numerals as described in describing FIGS. **1** to **7**C.

**[0116]** First, if the probe **100** is held in holder k while the first to sixth object sensors **291-1** to **291-6** equipped in the first to sixth holders **280-1** to **280-6** are activated, the object sensor sensing value processor **292** determines that the probe **100** is held in the holder k based on a sensing value from object sensor k, in operation S**1110**.

**[0117]** The controller **220** may determine whether the probe **100** held in is activated based on sensing values from the first to sixth electromagnetic wave sensors **295-1** to **295-6** arranged in the first to sixth holders **280-1** to **280-6**, and may update the mapping table.

**[0118]** Specifically, the controller **220** determines that the probe **100** comes into contact with the object sensor k that corresponds to the holder k while the first to sixth object sensors **291-1** to **291-6** equipped in the first to sixth holders **280-1** to **280-6**, respectively, are activated, i.e., the controller **220** determines that the probe **100** is now held in the holder k, in operation S**1110**. In this case, the probe may detect an operation status. The controller **220** then brings the stored existing mapping table with reference to sensing values from the first to sixth electromagnetic wave sensors **295-1** to **295-6**, in operation **51120**.

**[0119]** If electromagnetic wave sensor m detects activation of the probe **100**, the electromagnetic wave sensor sensing value processor **296** may determine that a currently activated probe is held in holder m, based on the sensing value from the electromagnetic wave sensor m, in operation S**1130**.

**[0120]** Next, the controller **220** determines whether the holder k and the holder m correspond to each other, in operation S**1140**.

**[0121]** If the holder k and the holder m corresponds to each other, the controller **220** keeps the mapping table intact, but otherwise, if the holder k and the holder m do not corresponds to each other, the controller **220** updates the mapping table, in operation S**1150**.

**[0122]** Specifically, if the holder k and the holder m do not correspond, the controller **220** activates all the ports **210-1** to **210-4** in a predetermined order, e.g., in a sequential order, and the electromagnetic wave sensor sensing value processor **296** examines each of the holder **280-1** to **280-6** corresponding to one of the ports **210-1** to **210-4** based on sensing values collected from the first to sixth electromagnetic wave sensors **291-1** to **291-6**. The controller **220** then newly updates the mapping table with a holder name corresponding to each port name.

**[0123]** For example, if the holder k and the holder m do not correspond, the controller **220** first activates the first port **210-1**, activates the first to sixth electromagnetic wave sensors **291-1** to **291-6**, and maps the second holder **280-2** and the first port **210-1** if an electromagnetic wave is detected by the second electromagnetic wave sensor **291-2** equipped in the second holder **280-2** when the probe **100** is held in the second holder **280-2**.

**[0124]** Next, the controller **220** activates the second port **210-2**, activates the first to sixth electromagnetic wave sensors **291-1** to **291-6**, and maps the fourth holder **280-4** and the second port **210-2** if an electromagnetic wave is detected by the fourth electromagnetic wave sensor **291-4** equipped in the fourth holder **280-4** when the probe **100** is held in the fourth holder **280-4**.

**[0125]** Subsequently, the controller **220** activates the third port **210-3**, activates the first to sixth electromagnetic wave sensors **291-1** to **291-6**, and maps the fifth holder **280-5** and the third port **210-3** if an electromagnetic wave is detected by the fifth electromagnetic wave sensor **291-5** equipped in the fifth holder **280-5** when the probe **100** is held in the fifth holder **280-5**.

**[0126]** Subsequently, the controller **220** activates the fourth port **210-4**, activates the first to sixth electromagnetic wave sensors **291-1** to **291-6**, and maps the first holder **280-1** and the fourth port **210-4** if an electromagnetic wave is detected by the first electromagnetic wave sensor **291-1** equipped in the first holder **280-1** when the probe **100** is held in the first holder **280-1**.

**[0127]** The updated mapping table or the port name of the probe **100** held in the holder m may be indicated for the user through the display unit **260**. Furthermore, if it is determined that the plurality of probes **100-1** to **100-6** are all held in any holders **280**, operation of all the probes **100-1** to **100-6** may be automatically stopped (Auto Freeze).

**[0128]** While the previous embodiments show that the first to fourth ports **210-1** to **210-4** are mapped to the second, fourth, fifth, and first holders **280-2**, **280-4**, **280-5**, and **280-1**, respectively, the present disclosure is not limited thereto.

**[0129]** FIG. **9** is a flowchart illustrating a general method for controlling an ultrasound diagnostic apparatus with a probe held out of a holder, according to an embodiment of the present disclosure. Reference numerals as will be cited in describing FIG. **9** are the same reference numerals as described in describing FIGS. **1** to **7**C.

**[0130]** First, if the probe **100** is held out of holder k while the first to sixth object sensors **291-1** to **291-6** equipped in the first to sixth holders **280-1** to **280-6** are activated, the object sensor sensing value processor **292** determines that the probe **100** is held out of the holder k based on a sensing value from object sensor k, in operation S**1210**.

**[0131]** Next, the controller **220** may determine port n mapped to the holder k based on the stored mapping table in operation S**1220**, and activate probe n connected to the port n in operation S**1230**.

**[0132]** Furthermore, the current mapping table, or the port number (n) and port name of the probe **100** held out of the holder k may be indicated for the user through the display unit **260**. In this case, the user may check the port name and manually type in whether the probe n is activated or not, through the input unit **270**.

**[0133]** While the previous embodiments show that the plurality of ports **210-1** to **210-6** and the plurality of holders **280-1** to **280-6** are equipped in the single main body **200**, the holders **280-1** to **280-6** may be equipped in separate devices and connected to the main body **200** over a wired/wireless communication network.

**[0134]** FIG. **10** is an exterior view of an ultrasound diagnostic apparatus, according to another embodiment of the present disclosure, and FIGS. **11** and **12** are control block diagrams of an ultrasound diagnostic apparatus, according to other embodiment of the present disclosure.

**[0135]** Referring to FIG. **10**, an ultrasound diagnostic apparatus **20** in accordance with another embodiment of the present disclosure may include a main body **300** and a holder assembly **400**. Although FIG. **10** shows that the main body **300** is implemented by a terminal or laptop having portability and mobility, the form of the main body **300** is not limited thereto.

**[0136]** The main body **300** may include at least one port **310** coupled with the probe **100**, a display unit **360** for displaying various contents based on signals received from the probe **100**, and an input unit **370** for receiving various commands from the user.

**[0137]** Similar to what is described above in connection with FIG. **1**, the port **310** includes a plurality of ports **310-1** and **310-2**, which may be coupled with first and second ports **310-1** and **310-2**, respectively.

**[0138]** Functions of the port **310**, display unit **360**, and input unit **370** are the same as those of the port **210**, display unit **260**, and input unit **270** as described in connection with FIGS. **1** to **6**, so the overlapping description will be omitted herein.

**[0139]** The holder assembly **400** may include a plurality of holders **410**; **410-1** to **410-3** to hold the probe **100**. The holder assembly **400** may be coupled with the main body **300** over a wired/wireless communication network. With the coupling between the main body **300** and the holder assembly **400**, the main body **300** may receive sensing values from the holder assembly **400** and send control signals to the holder assembly **400**.

**[0140]** For this, the main body **300** of FIG. **10** may include a controller **320**, a beamformer **330**, a signal processor **340**, and an image processor **350** as in FIG. **6**.

**[0141]** Functions of the controller **320**, beamformer **330**, signal processor **340**, and image processor **350** are the same as those of the controller **220**, beamformer **230**, signal processor **240**, and image processor **250** as described in connection with FIG. **6**, so the overlapping description will be omitted herein.

**[0142]** The main body **300** may further include a communication unit **380**, which may be connected to a communication unit **430** of a holder assembly **400** (see FIG. **12**) over a wired/wireless communication network.

**[0143]** The communication unit **380** of the main body **300** may receive signals sent from the holder assembly **400** via the wired/wireless communication network. The signal sent from the holder assembly **400** may include e.g., information about a processing result of an object sensor sensing value processor **422** (see FIG. **12**), and information about a processing result of an electromagnetic wave sensor sensing value processor **426** (see FIG. **12**).

**[0144]** In this case, the controller **320** may update the mapping table based on the signal received from the holder assembly **400**, or operate the probe **100** coupled with the port **310** by controlling at least one port **310**.

**[0145]** The wired/wireless communication network may include a wired communication network, a wireless communication network, a short range communication network, and a combination of them.

**[0146]** The wired communication network may be connected via a USB or AUX cable, and may include a wired Ethernet, a Wide Area Network (WAN), a Value-Added Network (VAN), or the like.

**[0147]** A communication protocol of a wireless communication network may include an institute of electrical and electronics engineers' (IEEE's) WLAN standard, such as IEEE 802.11x.

**[0148]** The communication protocol may include code division multiple access (CDMA), frequency division multiple access (FDMA), time division multiple access (TDMA), orthogonal frequency division multiple access (OFDMA), single carrier frequency division multiple access (SC-FDMA), etc. The CDMA may be implemented in a radio technology, such as universal terrestrial radio access (UTRA) or CDMA2000. The TDMA may be implemented in a radio technology, such as global system for mobile communications (GSM), general packet radio service (GPRS), or enhanced data rates for GSM evolution (EDGE). The OFDMA may be implemented in a radio technology, such as IEEE 802.11 (Wi-Fi), IEEE 802.16 (WiMAX), IEEE 802-20, E-UTRA (evolved UTRA), etc. The IEEE 802.16m is an evolution of IEEE 802.16e, and provides backward compatibility with an IEEE 806.16e based system. The UTRA is a part of the universal mobile telecommunications system (UMTS). The 3rd generation partnership project (3GPP) long term evolution (LTE) is a part of the evolved UMTS (E-UMTS) that uses evolved-UMTS terrestrial radio access (E-UTRA), and employs OFDMA in downlink and SC-FDMA in uplink. LTE-Advanced (LTE-A) is an evolution of the 3GPP LTE.

**[0149]** Communication protocols of the short-range communication network may include bluetooth, bluetooth low energy, infrared data association (IrDA), Wi-Fi, Wi-Fi Direct, Ultra Wideband (UWB), Near Field Communication (NFC), Zigbee, etc.

**[0150]** Referring to FIG. **12**, the holder assembly **400** in accordance with another embodiment of the present disclosure may include a plurality of holders **410-1** to **410-3**, object sensors **421-1** to **421-3** and elecromagnetic wave sensors **425-1** to **425-3** equipped in the holders **410-1** to **410-3**, an object sensor sensing value processor **422** for determining which one of holders **410-1** to **410-3** the probe **100** is held in or held out, based on sensing values collected from the plurality of object sensors **421-1** to **421-3**, and an electromagnetic wave sensor sensing value processor **426** for determining which one of holders **410-1** to **410-3** the

probe **100** is held in, based on sensing values collected from the plurality of electromagnetic wave sensors **425-1** to **425-3**.

**[0151]** Functions of the holders **410-1** to **410-3**, object sensors **421-1** to **421-3**, electromagnetic wave sensors **425-1** to **425-3**, object sensor sensing value processor **422**, and electromagnetic wave sensor sensing value processor **426** are the same as those of the holders **210-1** to **210-3**, object sensors **221-1** to **221-3**, electromagnetic wave sensors **225-1** to **225-3**, object sensor sensing value processor **222**, and electromagnetic wave sensor sensing value processor **226**, so the overlapping description will be omitted herein.

**[0152]** The holder assembly **400** may further include a communication unit **430**, which may be connected to the communication unit **380** (see FIG. **11**) of the main body **200** over a wired/wireless communication network.

**[0153]** The communication unit **430** of the holder assembly **400** may transmit signals to the main body **200** over the wired/wireless communication network. The signal sent from the holder assembly **400** may include e.g., information about a processing result of an object sensor sensing value processor **422**, and information about a processing result of an electromagnetic wave sensor sensing value processor **426**.

**[0154]** According to embodiments of the present disclosure of an ultrasound diagnostic apparatus, holder assembly, and method for controlling the ultrasound diagnostic apparatus, which port a probe held in a holder is coupled with may be recognized, and thus the user may freely use the probe without need to type in the port name.

**[0155]** Furthermore, according to embodiments of the present disclosure of an ultrasound diagnostic apparatus, holder assembly, and method for controlling the ultrasound diagnostic apparatus, the user may focus on the purpose of usage of the diagnostic apparatus without distraction in manipulation of the apparatus, e.g., without dispersion of gaze, and without requiring proficiency, and may thus appropriately determine a legion.

**[0156]** Several embodiments have been described, but a person of ordinary skill in the art will understand and appreciate that various modifications can be made without departing the scope of the present disclosure. Thus, it will be apparent to those ordinary skilled in the art that the true scope of technical protection is only defined by the following claims. For example, an element described in the singular form may be implemented as being distributed, and elements described in a distributed form may be implemented as being combined.

**[0157]** While the invention has been shown and described with reference to certain exemplary embodiments thereof, it will be understood by those skilled in the art that various changes in form and details may be made therein without departing from the spirit and scope of the invention as defined by the appended claims and their equivalents.

What is claimed is:

**1**. An ultrasound diagnostic apparatus comprising:

a holder implemented to hold a probe;

an object sensor for detecting physical changes around the holder;

an electromagnetic wave sensor for detecting electromagnetic waves around the holder; and

a controller for determining a port name for a probe held in the holder, based on sensing values from the object sensor and electromagnetic wave sensor.

**2**. The ultrasound diagnostic apparatus of claim **1**,

wherein the object sensor comprises a conductor sensor arranged on or around the holder, and

wherein the conductor sensor detects a change in impedance or resonance frequency.

**3**. The ultrasound diagnostic apparatus of claim **1**,

wherein the object sensor comprises a photo interrupter arranged on or around the holder, and

wherein the photo interrupter comprises a light source for irradiating light into the holder and a light receiver for receiving the light.

**4**. The ultrasound diagnostic apparatus of claim **1**,

wherein the object sensor comprises a magnetic sensor.

**5**. The ultrasound diagnostic apparatus of claim **1**,

wherein the object sensor comprises a capacitance sensor, and

wherein the capacitance sensor detects a change in impedance or resonance frequency.

**6**. The ultrasound diagnostic apparatus of claim **1**,

wherein the controller is configured to map the port name and a holder name of the holder.

**7**. The ultrasound diagnostic apparatus of claim **6**,

further comprising: a sensing value processor for determining whether a probe is held in or out of a holder, based on a sensing value from the object sensor.

**8**. The ultrasound diagnostic apparatus of claim **7**,

wherein the controller is configured to determine a port name mapped to a holder name of a holder of which a probe is held out, and activate a probe that corresponds to the mapped port name.

**9**. The ultrasound diagnostic apparatus of claim **7**,

further comprising: a display unit,

wherein the controller is configured to determine a port name mapped to a holder name of a holder of which a probe is held out, and

wherein the display unit is configured to display the holder name and the mapped port name.

**10**. The ultrasound diagnostic apparatus of claim **1**,

wherein the same number of the object sensors and electromagnetic wave sensors as the number of the holders are arranged.

**11**. The ultrasound diagnostic apparatus of claim **7**,

wherein if the sensing value processor determines that a probe is held in a first holder based on a sensing value from the object sensor, the controller is configured to update a mapping table based on a sensing value from the electromagnetic wave sensor.

**12**. The ultrasound diagnostic apparatus of claim **1**,

wherein the controller is configured to stop operation of a probe when the probe is held in the holder.

**13**. A holder assembly comprising:

a holder implemented to hold a probe;

an object sensor for detecting physical changes around the holder;

an electromagnetic wave sensor for detecting electromagnetic waves around the holder; and

a sensing value processor for determining whether a probe is held in or held out, based on sensing values from the object sensor and electromagnetic wave sensor.

**14**. The holder assembly of claim **13**,

further comprising: a communication unit for sending a result of determination of the controller to a main body.

**15**. The holder assembly of claim **13**,
wherein the object sensor comprises a conductor sensor arranged on or around the holder, and
wherein the conductor sensor detects a change in impedance or resonance frequency.

**16**. The holder assembly of claim **13**,
wherein the object sensor comprises a photo interrupter arranged on or around the holder, and
wherein the photo interrupter comprises a light source for irradiating light into the holder and a light receiver for receiving the light.

**17**. The holder assembly of claim **13**,
wherein the object sensor comprises a magnetic sensor.

**18**. The holder assembly of claim **13**,
wherein the electromagnetic wave sensor comprises an Electro-Magnetic Interference (EMI) sensor.

**19**. A method for controlling an ultrasound diagnostic apparatus, the method comprising:
detecting physical changes around a holder;
detecting electromagnetic waves around the holder; and
determining a port name for a probe held in the holder, based on the physical change and the electromagnetic wave.

**20**. The method of claim **19**,
wherein detecting physical changes around a holder comprises determining whether the probe is held in or held out.

**21**. The method of claim **20**,
further comprising: activating the probe corresponding to the holder based on an existing stored mapping table, if it is determined that the probe is held out of the holder.

* * * * *

| | | | |
|---|---|---|---|
| 专利名称(译) | 超声诊断设备，支架组件和用于控制超声诊断设备的方法 | | |
| 公开(公告)号 | US20170150944A1 | 公开(公告)日 | 2017-06-01 |
| 申请号 | US15/094409 | 申请日 | 2016-04-08 |
| [标]申请(专利权)人(译) | 三星麦迪森株式会社 | | |
| 申请(专利权)人(译) | 三星MEDISON CO.，LTD. | | |
| 当前申请(专利权)人(译) | 三星MEDISON CO.，LTD. | | |
| [标]发明人 | KIM CHIL SU | | |
| 发明人 | KIM, CHIL SU | | |
| IPC分类号 | A61B8/00 | | |
| CPC分类号 | A61B8/4444 A61B8/4433 A61B8/4438 A61B8/54 A61B8/4477 A61B8/00 A61B8/4405 A61B8/4427 A61B8/4472 A61B8/56 | | |
| 优先权 | 1020150169725 2015-12-01 KR | | |
| 外部链接 | Espacenet USPTO | | |


摘要(译)
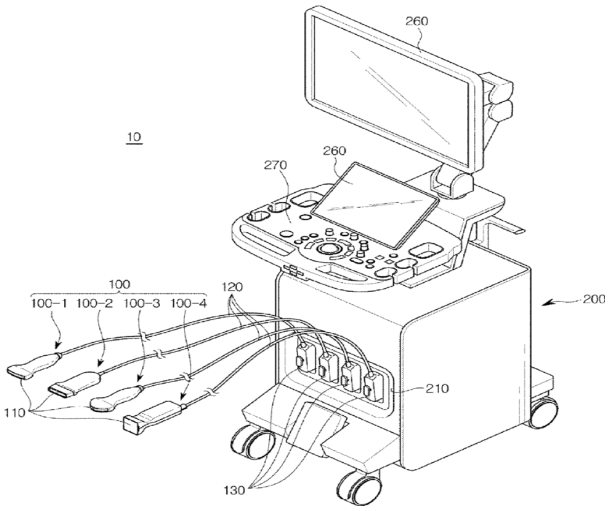
公开了一种超声诊断设备。超声波诊断装置包括用于保持探针的保持器;物体传感器，用于检测支架周围的物理变化;用于检测支架周围的电磁波的电磁波传感器;控制器，用于根据来自物体传感器和电磁波传感器的感测值，确定保持在支架中的探头的端口名称。