US 20070118412A1

(19) United States

(12) Patent Application Publication

(10) Pub. No.: US 2007/0118412 A1

McMorrow et al.

(43) Pub. Date: May 24, 2007

(54) SYSTEM FOR REMOTE EVALUATION OF ULTRASOUND INFORMATION OBTAINED BY A PROGRAMMED APPLICATION-SPECIFIC DATA COLLECTION DEVICE

(75) Inventors: **Gerald J. McMorrow**, Duvall, WA (US); **William L. Barnard**, Redmond, WA (US)

Correspondence Address:
JENSEN + PUNTIGAM, P.S.
SUITE 1020
2033 6TH AVE
SEATTLE, WA 98121 (US)

(73) Assignee: **DIAGNOSTIC ULTRASOUND**, BOTHELL, WA

(21) Appl. No.: **11/619,881**

(22) Filed: **Jan. 4, 2007**

Related U.S. Application Data

(60) Division of application No. 10/445,244, filed on May 23, 2003, now Pat. No. 7,189,205, which is a continuation of application No. 09/620,766, filed on Jul. 21, 2000, now Pat. No. 6,569,097.

Publication Classification

(51) **Int. Cl.**
G06Q 40/00 (2006.01)

(52) **U.S. Cl.** **705/4**

(57) **ABSTRACT**

A system which includes at least one ultrasound data collection device which is programmable to carry out a specific ultrasound procedure. The resulting ultrasound data is transmitted via a local server to the internet and from there to a web database server which processes the raw ultrasound data and provides application-specific information, such as a three-dimensional model, which can be used for diagnostic interpretation of the body part imaged by the ultrasound.

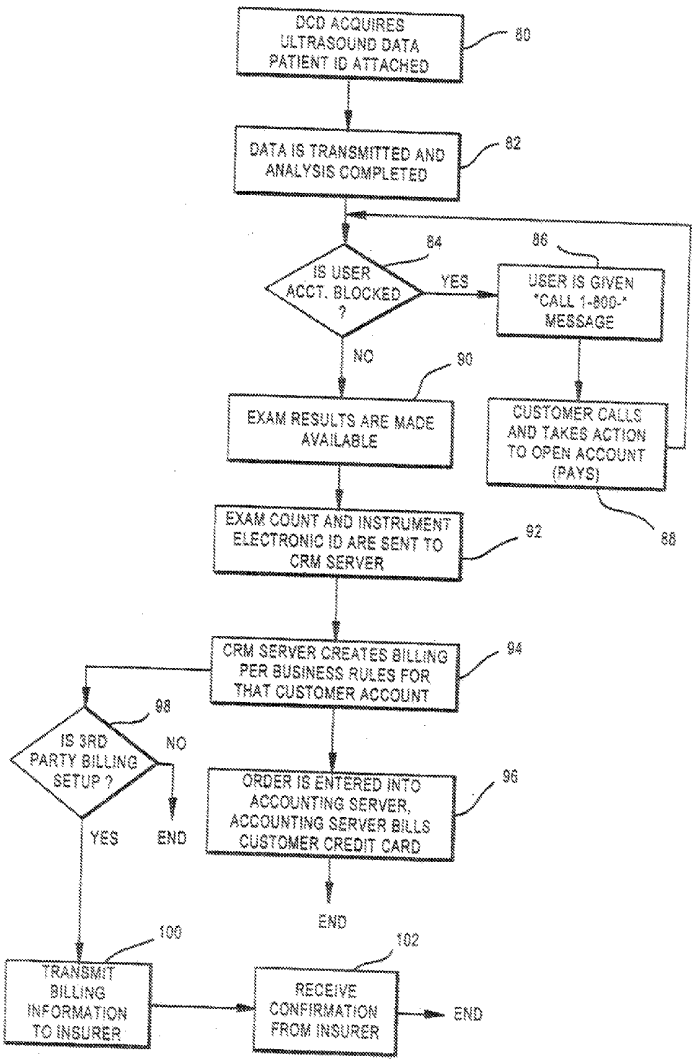

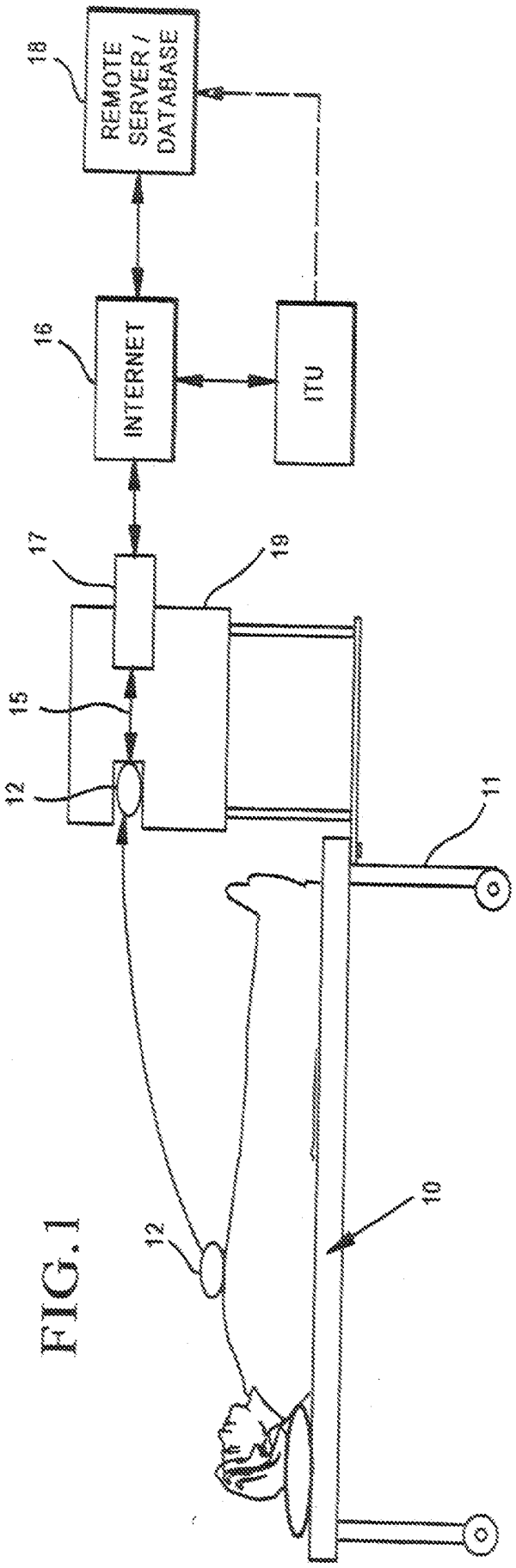

FIG. 1

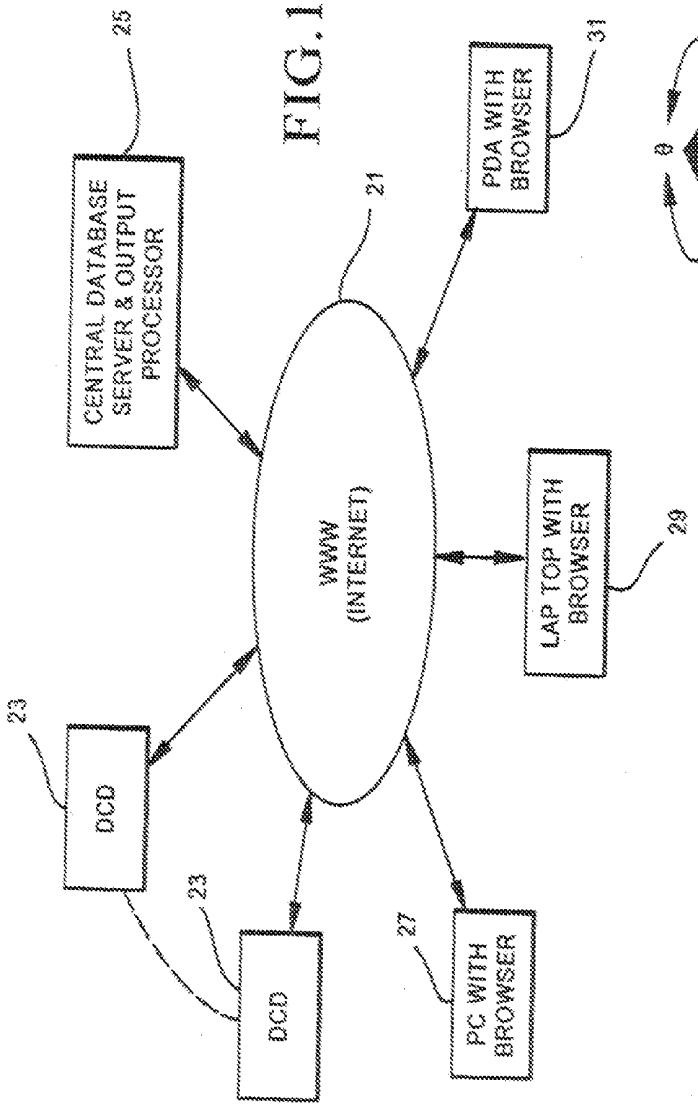
CENTRAL DATABASE SERVER & OUTPUT PROCESSOR
25
WWW (INTERNET)
21
PDA WITH BROWSER
31
LAP TOP WITH BROWSER
29
DCD
23
DCD
23
PC WITH BROWSER
27

FIG.1A

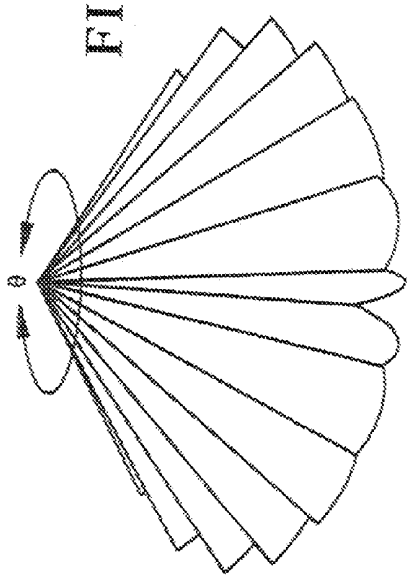
θ

FIG.2

FIG.3

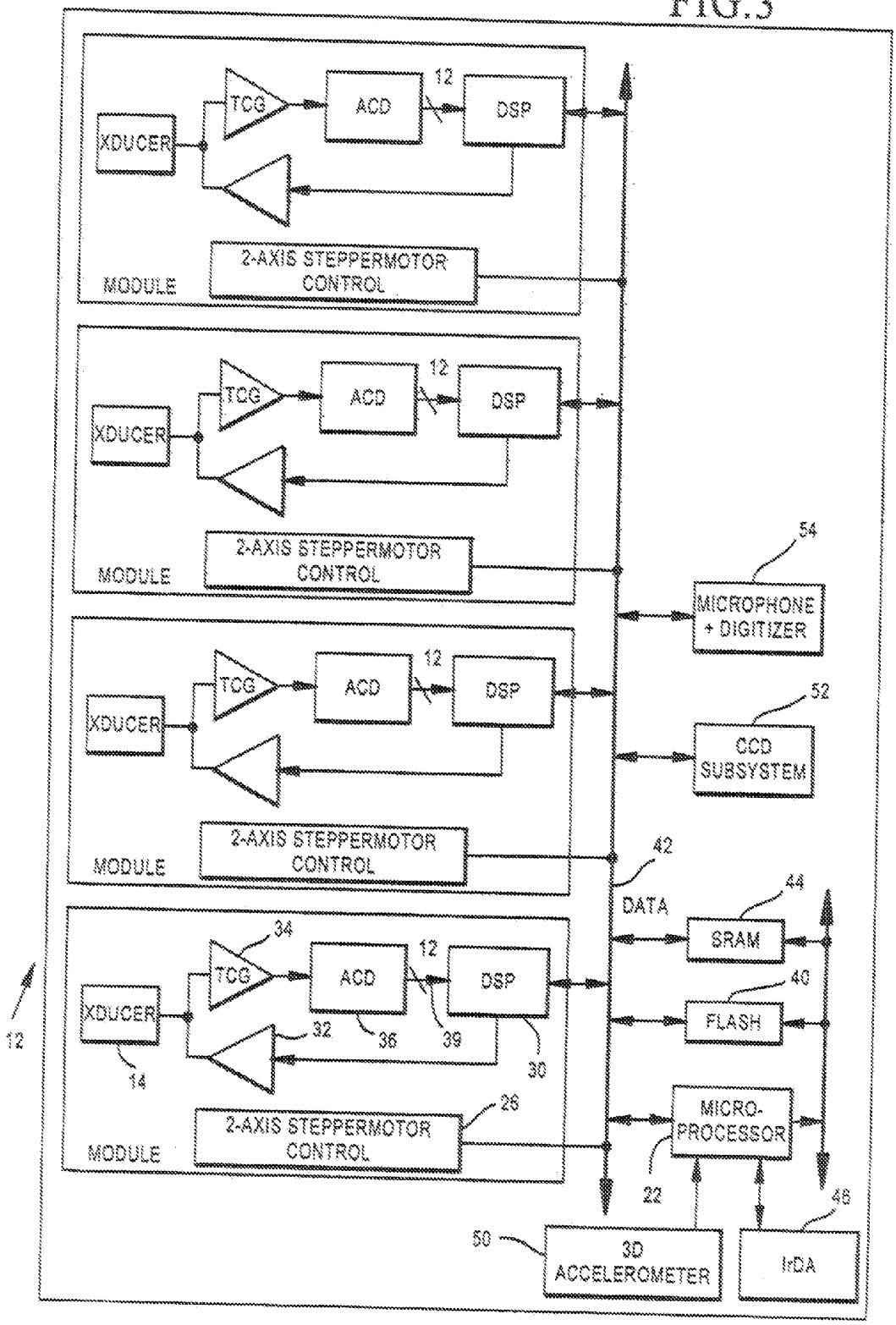
XDUCER
TCG
ACD
12
DSP
2-AXIS STEPPERMOTOR CONTROL
MODULE
54
MICROPHONE + DIGITIZER
52
CCD SUBSYSTEM
42
DATA
44
SRAM
40
FLASH
34
32
36
39
30
14
26
MICRO-PROCESSOR
22
46
50
3D ACCELEROMETER
IrDA

FIG.4

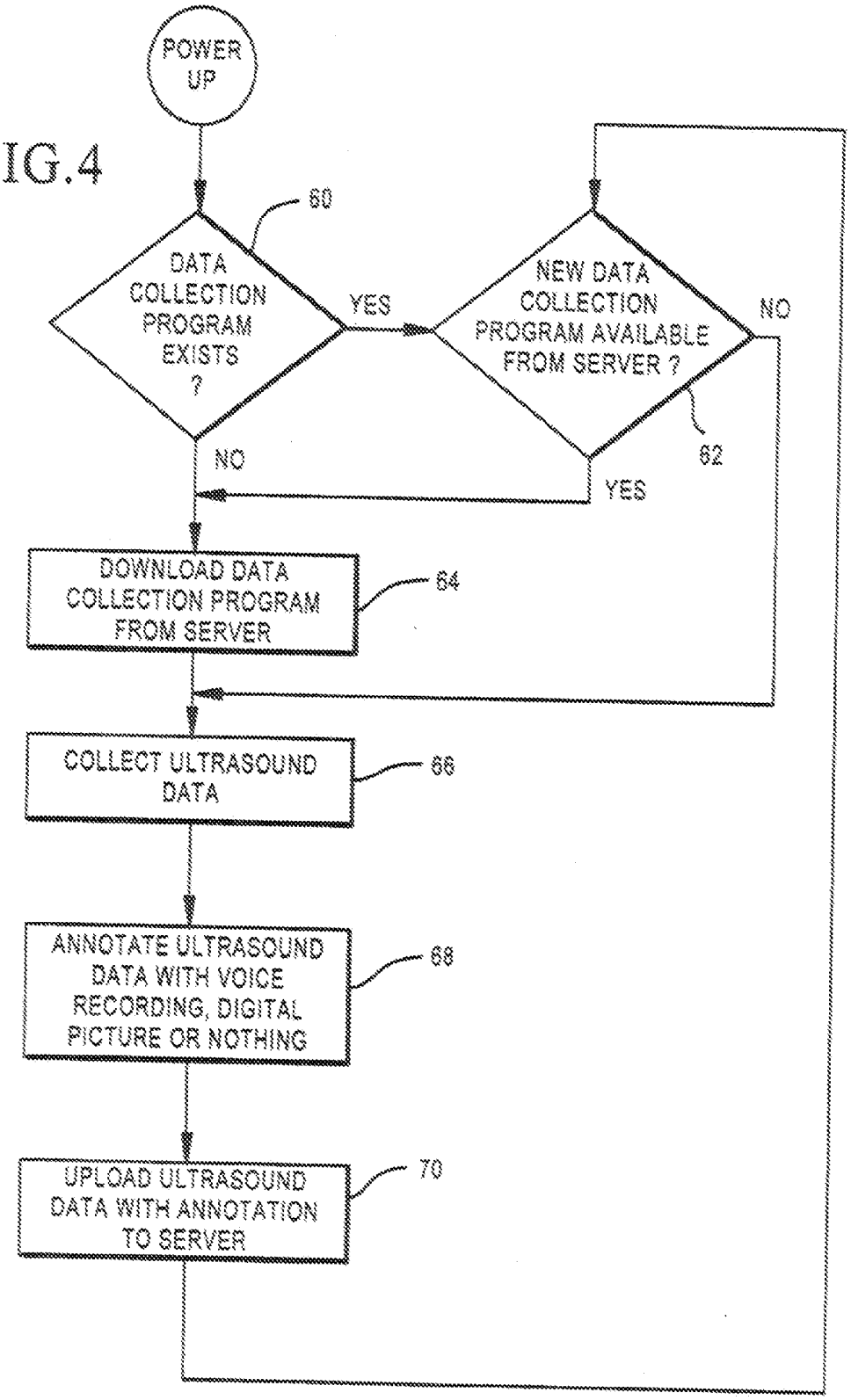
POWER UP
60
DATA COLLECTION PROGRAM EXISTS ?
YES
NEW DATA COLLECTION PROGRAM AVAILABLE FROM SERVER ?
NO
62
NO
YES
DOWNLOAD DATA COLLECTION PROGRAM FROM SERVER
64
COLLECT ULTRASOUND DATA
66
ANNOTATE ULTRASOUND DATA WITH VOICE RECORDING, DIGITAL PICTURE OR NOTHING
68
UPLOAD ULTRASOUND DATA WITH ANNOTATION TO SERVER
70

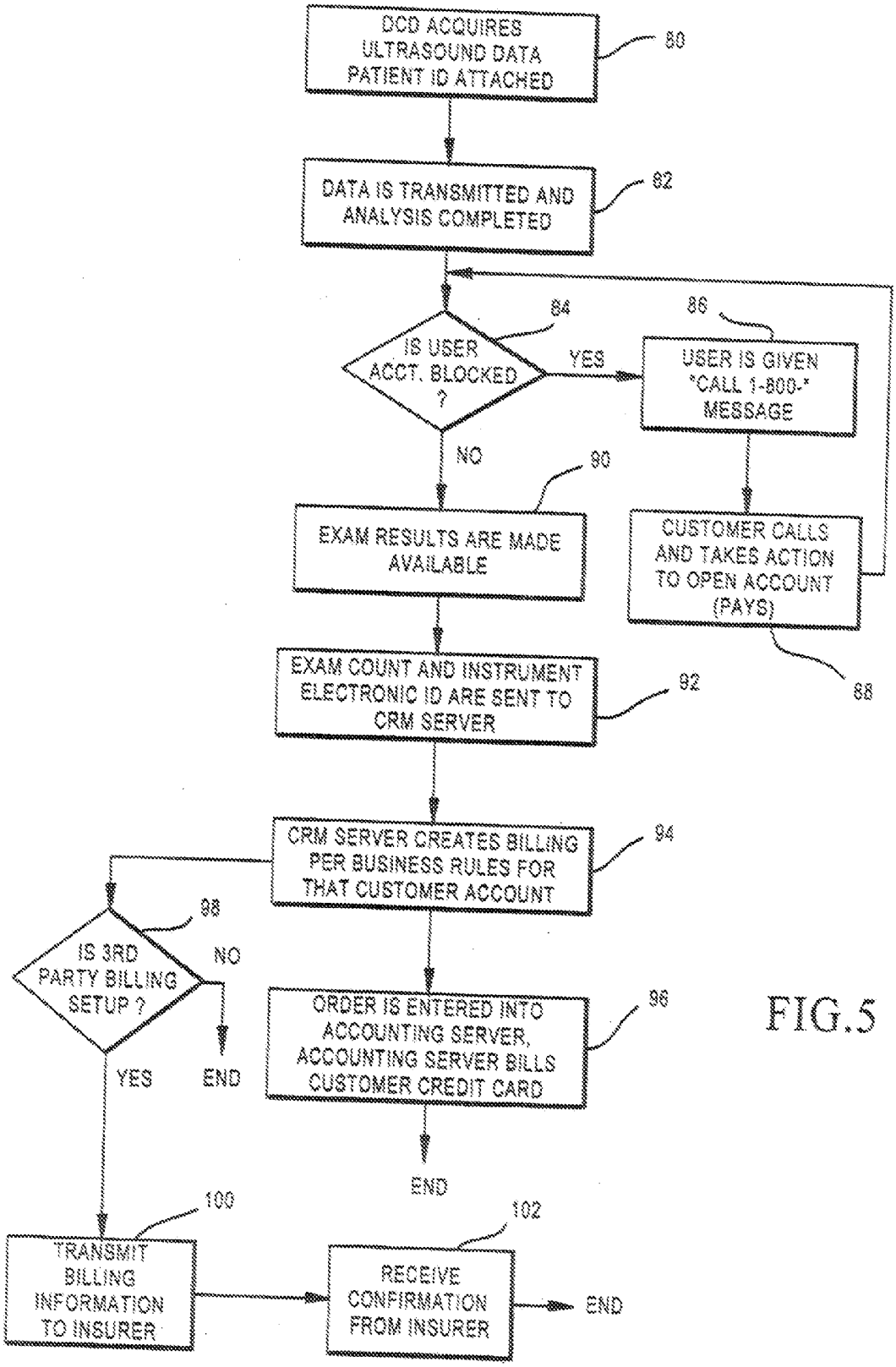
DCD ACQUIRES ULTRASOUND DATA PATIENT ID ATTACHED
80
DATA IS TRANSMITTED AND ANALYSIS COMPLETED
82
IS USER ACCT. BLOCKED ?
84
YES
USER IS GIVEN "CALL 1-800-" MESSAGE
86
NO
EXAM RESULTS ARE MADE AVAILABLE
90
CUSTOMER CALLS AND TAKES ACTION TO OPEN ACCOUNT (PAYS)
88
EXAM COUNT AND INSTRUMENT ELECTRONIC ID ARE SENT TO CRM SERVER
92
CRM SERVER CREATES BILLING PER BUSINESS RULES FOR THAT CUSTOMER ACCOUNT
94
IS 3RD PARTY BILLING SETUP ?
98
NO
END
YES
ORDER IS ENTERED INTO ACCOUNTING SERVER, ACCOUNTING SERVER BILLS CUSTOMER CREDIT CARD
96
END
TRANSMIT BILLING INFORMATION TO INSURER
100
RECEIVE CONFIRMATION FROM INSURER
102
END

FIG.5

SYSTEM FOR REMOTE EVALUATION OF ULTRASOUND INFORMATION OBTAINED BY A PROGRAMMED APPLICATION-SPECIFIC DATA COLLECTION DEVICE

[0001] This is division of U.S. patent application Ser. No. 10/445,244, filed on May 23, 2003, which in turn is a continuation of U.S. patent application Ser. No. 09/620,766, filed on Jul. 21, 2000.

TECHNICAL FIELD

[0002] This invention relates generally to medical diagnostic systems using ultrasound, and more particularly concerns application-specific medical ultrasound systems.

BACKGROUND OF THE INVENTION

[0003] The majority of medical ultrasound examinations/-procedures are carried out using "general purpose" ultrasound machines, which produce images of a selected portion of the human body. These images are in turn interpreted by a trained specialists in ultrasound. Radiologists, sonographers and, in some cases, specially trained physicians, usually in certain specialties, are among those who are trained to read and interpret an ultrasonic image. The cost of a general purpose ultrasound machine, however, is quite high, as is the cost of interpretation. Accordingly, and ultrasound procedure is typically quite expensive. This cost factor inherently limits the use of ultrasound, even though it is potentially a widely applicable, non-invasive diagnostic tool.

[0004] An alternative to the general purpose ultrasound machine is an application-specific ultrasound device. With an application-specific device, instead of using a general purpose ultrasound machine, a single type of ultrasound procedure is accomplished. There are many examples of application-specific or single purpose ultrasound machines. Two examples are shown in U.S. Pat. No. 4,926,871 and U.S. Pat. No. 5,235,985, both of which are directed toward a device for measuring the amount of urine in the bladder.

[0005] Instead of producing a real-time image which must be interpreted by a skilled operator, by measuring the image and then calculating the volume, the application-specific apparatus uses ultrasound signals and follow-on signal processing to automatically locate the bladder within the overall ultrasound volume, determine its boundaries, and then automatically compute the bladder volume, which is then provided to the trained, but not ultrasound skilled (e.g. sonographer), operator.

[0006] While bladder volume, of course, can be determined using a general purpose machine, as indicated above, an application-specific machine itself produces an actual volume number. This approach not only decreases the time to produce a bladder volume determination, it is also typically more accurate, and certainly less expensive. It does not require the services of an ultrasound-skilled operator, because the machine itself automatically produces the desired bladder volume information once the ultrasound probe (transmitter/receiver) has been properly positioned.

[0007] Application-specific ultrasound devices significantly lower the cost of ultrasound examinations and thus can be regularly used for a single patient in order to track bladder volume information over an extended period of time. This has proved to be extremely useful in both diagnosis and treatment of bladder dysfunction.

[0008] There are many other examples of application-specific ultrasound machines. These include machines which determine abdominal aorta size and kidney volume, among others. The significant disadvantage of application-specific ultrasound machines is that they are, in fact, just that—useful for just a single application. It would be too expensive and too cumbersome for a physician, particularly a general practitioner, to maintain a large number of application-specific ultrasound machines, even though ultrasound is useful in a variety of diagnostic situations.

[0009] Accordingly, it would be desirable to have an ultrasound system which is inexpensive, reliable and which does not require a specially trained operator and which further can be used in a variety of diagnostic situations.

SUMMARY OF THE INVENTION

[0010] Accordingly, the present invention is a system and corresponding method for generating application-specific medical ultrasound information, comprising: an ultrasound data collection assembly which in operation produces an ultrasound scan of a selected part of the human body of a patient and to produce ultrasound information therefrom; a data transmission system for transmitting ultrasound information obtained by the assembly to a processing location remote from the data collection assembly location, such as to a server on the internet; a processor for processing the transmitted information sufficiently to permit a medical analysis of the selected body part therefrom without the requirement of an ultrasound-skilled interpreter; and a memory structure for storing program information for at least one ultrasound procedure to be carried out by the data collection assembly and for storing information produced from the ultrasound procedure for each patient, including a data link between the memory structure and the data collection assembly.

[0011] The present invention also includes a system for financial tracking and billing of ultrasound procedures, comprising the steps of: performing an ultrasound diagnostic procedure on a patient and obtaining ultrasound data therefrom; transmitting the ultrasound data to a remote location for analysis; determining the status of the user's account; providing an opportunity for the user to clear the user's account in the event the user's account has been blocked for any reason; transmitting analyzed ultrasound data back to the user when the user's account is not blocked; and creating a billing to a selected party.

BRIEF DESCRIPTION OF THE DRAWINGS

[0012] FIG. **1** is a diagram showing the complete system of the present invention.

[0013] FIG. **1**A is a diagram illustrating the overall system of the present invention.

[0014] FIG. **2** is a diagram showing the ultrasound coverage of the transducer portion of the system of FIG. **1**.

[0015] FIG. **3** is a diagram showing the block diagram of the data collection device portion of FIG. **1**.

[0016] FIG. **4** is a flow chart showing the operation of a portion of the system of the present invention.

[0017] FIG. **5** is a flow chart showing steps in a business method aspect of the present invention.

BEST MODE FOR CARRYING OUT THE INVENTION

[0018] FIG. **1** shows the overall system of the present invention. The patient upon whom the ultrasound procedure is to be performed is shown generally at **10**. In FIG. **1**, the patient is shown in a supine position on a table **11**; however, the patient can be in virtually and position, depending upon the particular section of the body being imaged by the ultrasound device.

[0019] A data collection device (DCD) is shown generally at **12**. DCD **12** includes a conventional ultrasound transducer (transmitter/receiver) **14** (FIG. **3**). DCD **12** is programmed, as described below, to perform a specific ultrasound examination. In general, the operator places DCD **12** appropriately on the patient in the region which is to be imaged, and the ultrasound procedure is undertaken by the transmission and return of ultrasound signals. As an example, if the bladder is to be imaged, DCD **12** is placed on the skin area adjacent the bladder. The same procedure would be followed for other organs or areas of the body. The ultrasound information obtained by the DCD is then transmitted to a remote location where it is processed to produce a recognizable result of some kind, such as a three-dimensional model of the body part being imaged or specific numerical result.

[0020] More specifically, referring still to FIG. **1**, DCD **12** is used in combination with an internet-connected "thin server"**17**, linked to DCD **16** by a communication link **15**. In one example, thin server **17** can be an off-the-shelf personal digital system (PDA). Alternatives to the PDA could include a conventional PC, laptop or other internet-accessible device. PDA **17** includes a conventional web browser and through the internet **16** can log onto a system ultrasound web database and server, generally indicated at **18**. Web database and server **18** will, among other data, maintain a list of patients for the physician using the DCD and PDA combination.

[0021] Prior to beginning the ultrasound procedure, the patient is first identified to the PDA. If the patient is not in the web database **18**, information about the patient will be created in the form of a record for storage in web database **18**. PDA **17** will then display a list of application-specific programs for possible use by the data collection device **12**. The selected program will then control the operation of the DCD for a specific ultrasound application.

[0022] The operator will select one from the list of programs available, which will then be downloaded into the data collection device **12**. The communication link **15** between DCD **12** and PDA **17** can be either hard wire or wireless, such as infrared. In the event that infrared is used, DCD **12** and PDA **17** will be placed in a rack or stand **19** which will align the two devices appropriately for a line-of-sight In infrared transmission. The specific selected program selected is then transmitted through PDA **17** from the system database **18** through the internet.

[0023] DCD **12** may vary in shape, depending upon the surface of the body on which it is used, particularly whether it is to be used internally, such as vaginally, or externally, such as on the chest or abdominal area. DCD **12** in the embodiment shown is battery-powered and quite rugged in construction and will be operated by a simple on-off switch or push-button.

[0024] The DCD includes a spherical coordinate control module for the ultrasound transducer. The control module includes two stepper motors working in combination that will sweep the ultrasound transducer (and the ultrasound signals) through a three-dimensional volume.

[0025] Referring to FIGS. **2** and **3**, DCD **12** includes a microprocessor **22** which controls the movement of the transducer **14** through a two-axis stepper motor control **26**, which is used to step the transducer through a three-dimensional volume in precise movements. One motor (not shown) moves the transducer **14** through a specific angle in a given plane, referred to as the phi (ϕ) dimension (FIG. **2**). This angle can be varied, but in the embodiment shown is 120°. Approximately 77 ultrasound signals are transmitted in the embodiment shown as the transducer is moved through the 120° angle in one phi plane. This could differ; in another embodiment, the number of ultrasound signals could be up to 120°.

[0026] After the ultrasound signal sweep in the one phi plane is made, a second motor (not shown) moves the transducer in the theta (θ) direction, shown in FIG. **2**. The transducer **14** is then again swept through a 120° angle phi plane. This process continues until the transducer has completed a 360° theta coverage. While in some cases it may not be necessary to complete a 360° coverage, the system of the present invention has the ability to do so. In the embodiment shown, successive scan lines are separated by 1.5°, although this can be readily varied. The resulting three-dimensional ultrasound "cone" coverage is shown in FIG. **2**. It should be understood, however, that other coverage patterns can be successfully used, depending upon the ultrasound procedure to be accomplished.

[0027] In generating the ultrasound signals, the microprocessor **24** pulses a digital signal processor (DSP) **30** to produce the ultrasound signals, at a typical frequency of 3.7 mHz, although this could be within the range of 1-12 mHz. The ultrasound signals are applied to an amplifier **32** and then to transducer **14**, which transmits ultrasound signals to the body area of interest. Return signals are directed through the receiving portion of transducer **14** into a time controlled gain (TCG) amplifier **34**. The output from TCG amplifier **34** is applied to an analog-to-digital converter **36**, which outputs the resulting digital information on twelve output lines **38-38** to the digital signal processor **30**, which then directs the data into SRAM memory **44** (static random access memory). An address bus **42** connects microprocessor **22**, flash memory **40** and SRAM **44**. Flash memory **40** stores the program information.

[0028] FIG. **1**A shows a generalized system of the present invention utilizing the internet (WWW) **21**, a plurality of DCD devices **23-23**, which could be either single or multiple module DCDs (as explained in more detail hereinafter), a central database and server **25** and a plurality of IEDs (intelligent electronic devices), including, for example, a PC with a browser **27**, a laptop with browser **29**, or a PDA with browser **31**.

[0029] In the overall system, the central database and server **25** connected to the internet **21** has a capability of

communicating with a large plurality of DCD devices positioned at various physical locations, such as at various clinics or doctor's offices, each one of which is separately maintained and accounted for by the physician-user at that location. The DCD devices **23-23** may be either a single module device or one with multiple modules. In the system arrangement of FIG. **1**A, the cost of an individual DCD is small, particularly compared with a general purpose ultrasound machine, since the DCD can be fairly simple, typically without significant processing power.

[**0030**] The cost of connection to the internet for the DCD, such as through a PDA as shown in FIG. **1** or by some other arrangement, is also quite small. Hence, it is relatively easy for a physician-user to fund his/her part of the system. The processing of the ultrasound image collected by the DCD occurs in the web database server **25**. The processed output from database server **25** is then fed back to the practitioner through the internet **21** is then fed back to the practitioner through the internet **21** to the practitioner's IED, which will include conventional browser technology. The ultrasound data collected by the DCDs and transmitted to the web database and server typically will be compressed, as is the information form the web database server **25** back to the individual IEDs.

[**0031**] A flow chart for downloading the data-collection software into the individual DCD devices as shown in FIG. **4**. The data collection software runs in the DCD during the collection of the ultrasound data. It is application-specific, i.e. it is specific to the type of ultrasound procedure being conducted. The web database server maintains a list of software available for each DCD in the system and which are authorized for use by that DCD. Authorization of use of specific software is maintained by appropriate payment by the user of each DCD. The present system permits every DCD instrument to be upgraded or just selected DCD instruments. Once a DCD communicates with the database server for particular software, if new software for that particular application is available, the new software will be loaded into the DCD, if the DCD listed version does not match the overall database software for that specific application.

[**0032**] In the flow chart of FIG. **4**, after the DCD is initially powered, a determination is made as to whether or not the particular requested data collection program exists at the server for that DCD. If the data collection program does exist, a determination is then made at block **62** as to whether or not a replacement data collection program is available from the server. If the answer is "yes", or if the requested data collection program does not currently exist in the list for that DCD, the requested data collection program is downloaded from the server (block **64**). If the data collection program, on the other hand, does exist in the DCD list and there is no replacement program, then ultrasound data is collected, along with voice (audio) information, typed information and/or digital picture information, if desired, as shown at block **66**. The actual ultrasound information is annotated with the additional information (block **58**) and then uploaded to the server (block **70**) for analysis, as discussed above.

[**0033**] FIG. **3** shows microprocessor **22** controlling a DCD with a total of four identical modules, each with its own transducer. All the modules are served by the microprocessor **22** and the SRAM/flash memory **44**, **40**. When the modules are ganged together, the field of view being imaged is significantly increased. For instance, a DCD that includes four modules ganged together in a straight line would be appropriate for imaging a narrow but elongated body structure. Larger anatomies, such as the aorta or a third trimester fetus, require even a larger plurality of DCD modules (perhaps a total of 10 modules in three columns) arranged to cover the desired volume. The multiple module DCD, with its corresponding larger field of view, increases the probability of obtaining an image that includes the portion of the body of interest, where some part or feature of the portion of interest may be hidden from view from a single module by shadow structures, such as bowel gas, stones or bone.

[**0034**] The plurality of modules in the DCD are typically operated in parallel so that the total scan time for a multiple module DCD is approximately the same as that for a single module. The transducers in each module have a spatial pattern and orientation (start and stop points) of movement so that their ultrasound signals will not interfere with each other. In some cases, it may be desirable to orient the individual transducers such that one transducer is transmitting while others are receiving relative to the same target. As indicated briefly above, the use of multiple modules, each with a 120° scan angle (as compared to the more typical 75° scan angle), produces more accurate overall images, since the target area is being scanned from more than one position. Such an arrangement produces superior ultrasound data, without the need for a highly skilled device operator.

[**0035**] The ultrasound information gathered by the DCD **12**, converted to digital signals and transferred to memory, is then transmitted over a connecting link (In link **46** in FIG. **3**) to the PDA or similar unit **17** (FIG. **1**). It should be understood, however, as indicated briefly above, that other communication links can be used, including various infrared links/protocols, an RF connection or other compliant interface (the "Bluetooth" interface is one example). As indicated above, the PDA **17** is referred to as generally being a "thin" server, which could be a PDA, as indicated, a PC (with Windows software) or any other conventional internet connectable device; even a cell phone having an internet connectability would produce satisfactory results.

[**0036**] The data obtained by the DCD is then sent to the web database server **18** which is connected to the internet. The link between PDA **17** and the internet **16** is by any standard internet access. The database server **18**, as indicated above, includes a number of application-specific collection programs which can be downloaded into the DCD through the internet and the PDA.

[**0037**] Once the raw ultrasound data from the DCD **12** is uploaded into database **18**, it can be processed in a number of different ways. First, the web database server **18** may include diagnostic software which can itself evaluate the raw data to provide a resulting diagnosis. Further, the database software can create a three-dimensional model of the portion of the body being investigated from the ultrasound information. For instance, in the ultrasound examination of a kidney, a three-dimensional picture of an imaged kidney can be produced, along with any interior stones, which could be shown as interior solid objects. In another example, the abdominal aorta could be shown in three dimensions, along with an indication of the maximum diameter of the aorta.

[0038] The resulting processed information from the database server **18** is available to the physician, who has access to the database server **18** through his own PC or similar terminal unit. After review of the information, the physician can then take appropriate action, including, if necessary, instructing the patient to go to the hospital for emergency treatment. Alternatively, the basic ultrasound data could be interpreted at the database server location by an ultrasound technician, or through a combination of processing and skilled interpretation.

[0039] The system of the present invention also has a number of additional special features. Referring now again to FIG. **3**, the system includes an accelerometer **50** which can be used to detect instrument motion in three-dimensional space. This allows the system to detect and correct for motion introduced if either the operator or the patient inadvertently moves during the ultrasound procedure. In some applications, the accelerometer **50** can be used in monitoring a maximum threshold displacement which may occur during the ultrasound scanning of the patient. If patient movement exceeds the threshold, as determined by the accelerometer, an indication can then be provided to the operator that the scan needs to be re-done. In other applications, the record of motion provided by the accelerometer can be used to orient each individual scan line (the phi scan) with respect to other scan lines. This assures a locked geometry between the successive scan lines.

[0040] Accelerometer **50** is sensitive enough to resolve the gravity effect produced by the earth. This allows the system to obtain an indication of the patient's position during the examination. If the patient were supine, with the instrument on the patient's abdomen, the gravity vector would be straight down, normal to the direction of the ultrasound signals. However, even if the position of the patient is known, by means of external information, the earth gravity vector can still provide useful information, e.g. if the patient is supine, and the ultrasound examination is of the patient's bladder, the angle of the ultrasound probe is provided by the gravity vector. The probe angle is important information for a system which does not include the use of a trained sonographer.

[0041] In the operational steps of the overall system, which includes the various portions of the system discussed above, an operator first uses the thin server (PDA **17**) to access the ultrasound database server **18** through the internet connection. If the patient's record is not in the database, a record is created. The PDA **17** will then provide a list of software available to it from the database for application-specific examinations. The correct one is selected by the operator and the control software for that application then is downloaded into the DCD **12**. Once this is completed, the PDA screen will produce a screen image (from the ultrasound web database server **18**) with an explanation of how to position the DCD **12** on the patient for the particular selected examination.

[0042] The operator then applies a standard coupling gel or gel pad article to the DCD **12** and orients the DCD on the patient, as shown on the PDA **17**, and presses the scan button the DCD **12**. The DCD **12** then transmits and collects all of the required ultrasound raw data in a short amount of time, typically two seconds or less.

[0043] After the ultrasound data collection is completed, the operator returns DCD **12** to the equipment stand or otherwise positions it in such a way that DCD **12** can communicate via infrared with the PDA **17**, and from there to the web database server **18**. The uploading of data typically takes a relatively small amount of time, typically less than 45 seconds, and during that time, the operator can locate the patient's record on the database and link the new ultrasound information with the patient's existing record. Once the raw information is in database server **18**, it is processed such that it can be readily interpreted by the operator or a physician. The physician will then take appropriate action, if any action is indicated.

[0044] In the system of the present invention, a single web database server **18** can respond to many DCDs. The database server **18** will keep a list of software which is available and authorized for each DCD which is connectable to it through the internet. With such an arrangement, the DCD can be a relative simple, inexpensive, robust device for transmitting and receiving ultrasound data, while the image processing of the data is accomplished by software in the web database server **18**, which can serve a large number of similar DCD systems. This minimizes the cost for an individual ultrasound examination carried out with a DCD. The ultrasound data is typically compressed prior to transmission to the web database, which speeds up the transmission and reduces the file storage requirements on the internet server. The processed information can be fed back to the browser with compression as well.

[0045] In another specific additional feature, referring again to FIG. **3**, a CCD camera subsystem **52** is used with the DCD **12**. The CCD camera **52** takes a digital photograph of the patient at the time of the ultrasound procedure. This photograph can be included with the patient's raw ultrasound data in the database. The operator can also take pictures of other important information, such as the patient's insurance card or other insurance information. A video camera can also be utilized as part of the CCD system. The database server **18** can also accept fingerprint or other scan information which aids in patient identification.

[0046] In still another feature, again referring to FIG. **3**, a microphone and digitizer **54** could be included to record audio information. All audio information during the ultrasound procedure could be recorded, or just selective information provided by the operator.

[0047] The audio recording, after it is digitized, can then be readily "attached" or linked to the ultrasound data collected by the DCD and uploaded together to the web-based database server **18**. The audio recording can be used at the web server, or can be used along with the processed ultrasound data by the physician-user through an internet connected device. The audio information can provide information concerning the procedure or other information concerning the patient.

[0048] Voice-print software can also be included at the web server to analyze the recording and identify the speaker, based on voice print biographical information. This would be another way to both identify the DCD operator and/or the patient.

[0049] In some cases, the operator will perform the ultrasound procedure and upload the raw data without necessarily identifying the patient. It is not mandatory that the operator find or create a patient record at the time of the

ultrasound procedure. Further, since the ultrasound data will be stored in memory, there can be a lapse between the time of the ultrasound procedure and when the raw data is uploaded. When the raw data is uploaded, either shortly after the data is obtained or at a later time, an "exam incident" indicator can be created in database **18**, which includes the exact time and date the procedure was performed, as well as the serial number of the device used. Database **18** will eventually be able to link the DCD instrument to a specific location and a list of possible users. When convenient, the operator will access the database, where the list of "exam incidents", connected with their facility/user name, is listed. The operator can then connect the appropriate patient to the exam.

[**0050**] The present invention has a number of applications in addition to the ability to provide ultrasound procedures quickly, efficiently and at a low cost. First, the database has the capability of maintaining and collecting every ultrasound examination on every patient in the database. This provides an ability to track a patient's history over time. For instance, by maintain a complete history of all abdominal aorta scans, the system can provide an indication on the progression and growth of an aneurysm in the aorta. The data can even be presented in the form of a computer-generated video or movie of the characteristics of the particular organ changing over time. This visual information may also be a significant incentive for the patient to follow guidelines suggested by the physician.

[**0051**] The system also provides to the clinician an ability to "blind" clinical studies early in an application product design cycle. Raw data for a particular ultrasound examination can be collected in the course of normal patient flow. When a surgeon or other physician is treating a particular condition, they will take an ultrasound scan at the same time that a conventional CT or MRI examination is ordered. The radiologist or other professional interprets the result of the CT or MRI in normal course. An analysis of the ultrasound data is then also performed. The results can then be compared and a report generated concerning the correlation between the ultrasound results and the more conventional CT or MRI results.

[**0052**] One of the significant advantages of the present invention is the resulting relatively low cost to the physician, and to the patient, of an ultrasound examination. The DCD and PDA hardware are quite inexpensive compared to a traditional ultrasound machine. The charge made by a central system administrator for managing the database would also be relatively inexpensive. The actual cost would depend upon the processing necessary for a particular ultrasound procedure. The present system can also be used to develop appropriate billing for the patient's insurance provider, saving time and expense for the insurer.

[**0053**] FIG. **5** shows a business payment system or method involving use of the remotely based ultrasound system of the present invention. In block **80**, the acquiring event is shown, i.e. the ultrasound data is acquired by a user (typically a physician) using a DCD. The particular ID (identification) of the patient is attached to that data. In block **82**, the data is transmitted (uploaded) to the internet and then to the database server, whDec. 29, 2006ere it is processed as discussed above. After processing is completed, it is then determined at block **84** whether the user's account is "blocked" and thereby prevented from receiving analysis information. If "yes", the user is provided a message to call a particular phone number or similar contact, at block **86**.

[**0054**] The user then has the opportunity to take any action to re-open the account (block **88**). The user's account will be blocked typically by an unpaid balance. If the user's account is not blocked, or is reopened by action of the user, the results of the processing are made available to the user, as shown at block **90**.

[**0055**] After the results are made available to the user, both the identification number of the examination and the ID of the particular electronic instrument used are sent to the customer relationship management (CPM) accounting server, as shown at block **92**. The CRM server then creates a bilking for that user's account in accordance with the contract between the user and the system owner (block **94**); the CRM server either bills the user's credit card or provides a statement for payment to the user, as shown in block **96**. This is the end of the billing system relative to the user directly.

[**0056**] There is also a determination made by the accounting server as to whether a third part (insurance company) is to be billed for the service, as shown at block **98**, which is a branch of the program. If not, the third part billing branch ends. If there is to be a third party billing, billing information is transmitted to the third party insurer, as shown at block **100**. A confirmation of receipt is then received from the insurer (block **102**).

[**0057**] The overall business billing system includes coordination between the analysis and transmission of the ultrasound data and the determination of the status of the user's account. If the user's account is current, then the billing is automatically tallied and provided both to the user and/or to the insurance company, as appropriate.

[**0058**] Hence, an ultrasound system has been developed which combines relatively inexpensive data collection hardware at a physician's site with a remote processing and evaluation capability available to the physician by means of a web database server. The processing can be relatively inexpensive, with the result, such as a three-dimensional model, being made available to the physician for evaluation. In such an arrangement, the physician, without specialized ultrasound training, can readily make accurate diagnostic determinations from the results provided. A specialist in ultrasound interpretation is not necessary. Hence, the system is a general purpose, application-specific structure where the system performs in operation like an application-specific device, but has the capability, depending upon the program software, of operating and processing data like a plurality of different application-specific structures, using the same hardware and software base but with different program application obtained from a central database.

[**0059**] Although a preferred embodiment of the invention has been disclosed here for purposes of illustration, it should be understood that various changes, modifications and substitutions may be incorporated without departing from the spirit of the invention, which is defined by the claims which follow.

What is claimed is:

1. A system for financial tracking and billing of ultrasound procedures, comprising the steps of;

performing an ultrasound diagnostic scan by a system user on a patient at a given location and for obtaining unprocessed ultrasound information therefrom;

transmitting the unprocessed ultrasound data to a location which is remote from the given location for analysis by a system provider, wherein the remote location is not physically accessible by a medical practitioner who carries out treatment of the patient;

determining the status of the user's account with the system provider;

providing an opportunity for the user to clear the user's account, in the event that the user's account has been blocked for any reason;

transmitting analyzed ultrasound information back to the user when the user's account is not blocked, wherein the analyzed ultrasound data includes information suitable for use in the treatment of the patient by the medical practitioner; and

creating a billing for the ultrasound diagnostic procedure and transmitting the billing to a selected party.

2. A system of claim **6**, wherein the selected party is a third part insurer.

3. A system of claim **6**, wherein the selected party is the system user.

* * * * *

专利名称(译)	用于远程评估由编程的应用程序专用数据收集设备获得的超声信息的系统		
公开(公告)号	US20070118412A1	公开(公告)日	2007-05-24
申请号	US11/619881	申请日	2007-01-04
[标]申请(专利权)人(译)	诊断超声		
申请(专利权)人(译)	诊断超声		
当前申请(专利权)人(译)	诊断超声		
[标]发明人	MCMORROW GERALD J BARNARD WILLIAM L		
发明人	MCMORROW, GERALD J. BARNARD, WILLIAM L.		
IPC分类号	G06Q40/00 A61B8/00 G06F19/00 G06Q50/24 G16H10/60		
CPC分类号	A61B8/00 A61B8/56 A61B8/565 G06F19/3418 G06Q40/08 G06Q50/24 G16H30/20 G16H40/67		
外部链接	Espacenet USPTO		

摘要(译)
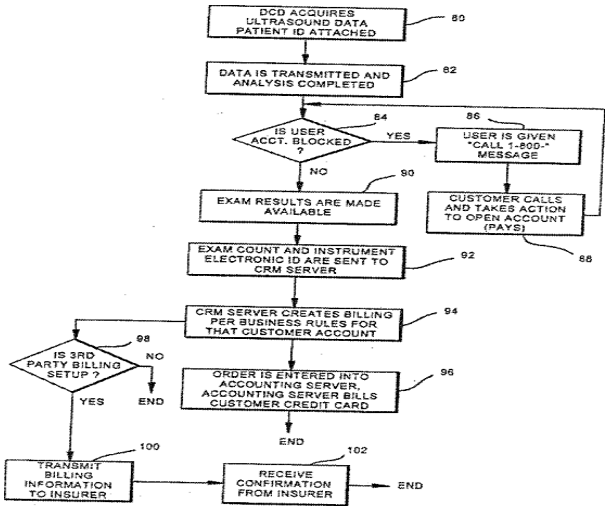
一种系统，包括至少一个超声数据采集装置，该装置可编程以执行特定的超声程序。产生的超声数据通过本地服务器传输到互联网并从那里传输到网络数据库服务器，该服务器处理原始超声数据并提供特定于应用的信息，例如三维模型，可用于诊断解释超声成像的身体部位。