US009907535B2

(12) **United States Patent**
Barthe et al.

(10) **Patent No.: US 9,907,535 B2**
(45) **Date of Patent: *Mar. 6, 2018**

(54) **VISUAL IMAGING SYSTEM FOR ULTRASONIC PROBE**

(71) Applicant: **Ardent Sound, Inc.**, Mesa, AZ (US)

(72) Inventors: **Peter G Barthe**, Phoenix, AZ (US); **Michael H Slayton**, Tempe, AZ (US)

(73) Assignee: **ARDENT SOUND, INC.**, Mesa, AZ (US)

(*) Notice: Subject to any disclaimer, the term of this patent is extended or adjusted under 35 U.S.C. 154(b) by 895 days.

This patent is subject to a terminal disclaimer.

(21) Appl. No.: **13/854,936**

(22) Filed: **Apr. 1, 2013**

(65) **Prior Publication Data**

US 2013/0231567 A1 Sep. 5, 2013

Related U.S. Application Data

(63) Continuation of application No. 13/071,298, filed on Mar. 24, 2011, now Pat. No. 8,409,097, which is a (Continued)

(51) **Int. Cl.**
A61B 8/00 (2006.01)

(52) **U.S. Cl.**
CPC ***A61B 8/4263*** (2013.01); ***A61B 8/00*** (2013.01); ***A61B 8/42*** (2013.01); ***A61B 8/4245*** (2013.01); ***A61B 8/4427*** (2013.01); ***A61B 8/463*** (2013.01)

(58) **Field of Classification Search**
CPC A61B 8/4263; A61B 8/00; A61B 8/42; A61B 8/4245; A61B 8/463; A61B 8/4427
See application file for complete search history.

(56) **References Cited**

U.S. PATENT DOCUMENTS

2,427,348 A 9/1947 Bond et al.
3,913,386 A 10/1975 Saglio
(Continued)

FOREIGN PATENT DOCUMENTS

DE 4029175 3/1992
DE 10140064 3/2003
(Continued)

OTHER PUBLICATIONS

Calderhead et al., One Mechanism Behind LED Photo-Therapy for Wound Healing and Skin Rejuvenation: Key Role of the Mast Cell, Laser Therapy, Jul. 2008, pp. 141-148, 17.3.
(Continued)

Primary Examiner — Katherine Fernandez
Assistant Examiner — Colin T Sakamoto
(74) *Attorney, Agent, or Firm* — Quarles & Brady, LLP

(57) **ABSTRACT**

A non-invasive visual imaging system is provided, wherein the imaging system procures an image of a transducer position during diagnostic or therapeutic treatment. In addition, the system suitably provides for the transducer to capture patient information, such as acoustic, temperature, or ultrasonic images. For example, an ultrasonic image captured by the transducer can be correlated, fused or otherwise combined with the corresponding positional transducer image, such that the corresponding images represent not only the location of the transducer with respect to the patient, but also the ultrasonic image of the region of interest being scanned. Further, a system is provided wherein the information relating to the transducer position on a single patient may be used to capture similar imaging planes on the same patient, or with subsequent patients. Moreover, the imaging information can be effectively utilized as a training tool for medical practitioners.

14 Claims, 10 Drawing Sheets

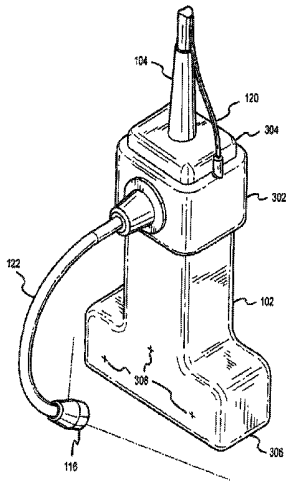

Related U.S. Application Data

continuation of application No. 11/554,272, filed on Oct. 30, 2006, now Pat. No. 7,914,453, which is a continuation-in-part of application No. 10/358,110, filed on Feb. 4, 2003, now Pat. No. 7,142,905, which is a continuation of application No. 09/750,816, filed on Dec. 28, 2000, now Pat. No. 6,540,679.

(56) **References Cited**

U.S. PATENT DOCUMENTS

3,965,455 A 6/1976 Hurwitz
3,992,925 A 11/1976 Perilhou
4,039,312 A 8/1977 Patru
4,059,098 A 11/1977 Murdock
4,101,795 A 7/1978 Fukumoto
4,166,967 A 9/1979 Benes et al.
4,211,948 A 7/1980 Brisken et al.
4,211,949 A 7/1980 Brisken et al.
4,213,344 A 7/1980 Rose
4,276,491 A 6/1981 Daniel
4,315,514 A 2/1982 Drewes et al.
4,325,381 A 4/1982 Glenn
4,343,301 A 8/1982 Indech
4,372,296 A 2/1983 Fahim
4,379,145 A 4/1983 Masuho et al.
4,381,007 A 4/1983 Doss
4,381,787 A 5/1983 Hottinger
4,397,314 A 8/1983 Vaguine
4,409,839 A 10/1983 Tanezar
4,431,008 A 2/1984 Wanner et al.
4,441,486 A 4/1984 Pounds
4,452,084 A 6/1984 Taenzer
4,484,569 A 11/1984 Driller et al.
4,507,582 A 3/1985 Glenn
4,513,749 A 4/1985 Kino
4,513,750 A 4/1985 Heyman et al.
4,527,550 A 7/1985 Ruggera et al.
4,528,979 A 7/1985 Marchenko
4,534,221 A 8/1985 Fife et al.
4,566,459 A 1/1986 Umemura et al.
4,567,895 A 2/1986 Putzke
4,586,512 A 5/1986 Do-Huu
4,601,296 A 7/1986 Yerushalmi
4,620,546 A 11/1986 Aida et al.
4,637,256 A 1/1987 Sugiyama et al.
4,646,756 A 3/1987 Watmough et al.
4,663,358 A 5/1987 Hyon
4,668,516 A 5/1987 Duraffourd et al.
4,672,591 A 6/1987 Breimesser et al.
4,680,499 A 7/1987 Umemura et al.
4,697,588 A 10/1987 Reichenberger
4,754,760 A 7/1988 Fukukita et al.
4,757,820 A 7/1988 Itoh
4,771,205 A 9/1988 Mequio
4,801,459 A 1/1989 Liburdy
4,803,625 A 2/1989 Fu et al.
4,807,633 A 2/1989 Fry
4,817,615 A 4/1989 Fukukita et al.
4,858,613 A 8/1989 Fry et al.
4,860,732 A 8/1989 Hasegawa
4,865,041 A 9/1989 Hassler
4,865,042 A 9/1989 Umemura
4,867,169 A 9/1989 Machida
4,874,562 A 10/1989 Hyon
4,875,487 A 10/1989 Seppi
4,891,043 A 1/1990 Zeimer et al.
4,893,624 A 1/1990 Lele
4,896,673 A 1/1990 Rose
4,900,540 A 2/1990 Ryan et al.
4,901,729 A 2/1990 Saitoh et al.
4,917,096 A 4/1990 Englehart
4,932,414 A 6/1990 Coleman et al.
4,938,216 A 7/1990 Lele
4,938,217 A 7/1990 Lele
4,947,046 A 8/1990 Kawabata et al.
4,951,653 A 8/1990 Fry et al.
4,955,365 A 9/1990 Fry et al.
4,958,626 A 9/1990 Nambu
4,973,096 A 11/1990 Joyce
4,976,709 A 12/1990 Sand
4,979,501 A 12/1990 Valchanov
4,992,989 A 2/1991 Watanabe et al.
5,012,797 A 5/1991 Liang
5,018,508 A 5/1991 Fry et al.
5,030,874 A 7/1991 Saito et al.
5,036,855 A 8/1991 Fry et al.
5,040,537 A 8/1991 Katakura
5,054,310 A 10/1991 Flynn
5,054,470 A 10/1991 Fry et al.
5,054,491 A * 10/1991 Saito A61B 1/0005 600/109
5,070,879 A 12/1991 Herres
5,088,495 A 2/1992 Miyagawa
5,115,814 A 5/1992 Griffith
5,117,832 A 6/1992 Sanghvi et al.
5,123,418 A 6/1992 Saurel
5,143,063 A 9/1992 Fellner
5,143,074 A 9/1992 Dory
5,149,319 A 9/1992 Unger
5,150,711 A 9/1992 Dory
5,150,714 A 9/1992 Green
5,152,294 A 10/1992 Mochizuki et al.
5,156,144 A 10/1992 Iwasaki
5,158,536 A 10/1992 Sekins
5,159,931 A 11/1992 Pini
5,163,421 A 11/1992 Bernstein
5,163,436 A 11/1992 Saitoh et al.
5,178,135 A 1/1993 Uchiyama et al.
5,190,518 A 3/1993 Takasu
5,190,766 A 3/1993 Ishihara
5,191,880 A 3/1993 McLeod
5,205,287 A 4/1993 Erbel et al.
5,209,720 A 5/1993 Unger
5,212,671 A 5/1993 Fujii et al.
5,215,680 A 6/1993 D'Arrigo
5,224,467 A 7/1993 Oku
5,230,334 A 7/1993 Klopotek
5,230,338 A 7/1993 Allen et al.
5,247,924 A 9/1993 Suzuki et al.
5,255,681 A 10/1993 Ishimura et al.
5,257,970 A 11/1993 Dougherty
5,265,614 A 11/1993 Hayakawa
5,267,985 A 12/1993 Shimada et al.
5,269,297 A 12/1993 Weng
5,282,797 A 2/1994 Chess
5,295,484 A 3/1994 Marcus et al.
5,295,486 A 3/1994 Wollschlager et al.
5,304,169 A 4/1994 Sand
5,305,756 A 4/1994 Entrekin et al.
5,321,520 A 6/1994 Inga et al.
5,323,779 A 6/1994 Hardy et al.
5,327,895 A 7/1994 Hashimoto et al.
5,348,016 A 9/1994 Unger et al.
5,360,268 A 11/1994 Hayashi
5,370,121 A 12/1994 Reichenberger et al.
5,371,483 A 12/1994 Bhardwaj
5,375,602 A 12/1994 Lancee et al.
5,379,773 A 1/1995 Hornsby
5,380,280 A 1/1995 Peterson
5,380,519 A 1/1995 Schneider et al.
5,383,917 A 1/1995 Desai et al.
5,391,140 A 2/1995 Schaetzle et al.
5,391,197 A 2/1995 Burdette et al.
5,392,259 A 2/1995 Bolorforosh
5,396,143 A 3/1995 Seyed-Bolorforosh et al.
5,398,689 A 3/1995 Connor et al.
5,406,503 A 4/1995 Williams, Jr. et al.
5,417,216 A 5/1995 Tanaka
5,419,327 A 5/1995 Rohwedder
5,423,220 A 6/1995 Finsterwald et al.
5,435,311 A 7/1995 Umemura et al.
5,438,998 A 8/1995 Hanafy
5,458,596 A 10/1995 Lax
5,460,179 A 10/1995 Okunuki et al.

(56) **References Cited**

U.S. PATENT DOCUMENTS

5,460,595 A 10/1995 Hall et al.
5,469,854 A 11/1995 Unger et al.
5,471,988 A 12/1995 Fujio
5,487,388 A 1/1996 Rello et al.
5,492,126 A 2/1996 Hennige et al.
5,496,256 A 3/1996 Bock
5,501,655 A 3/1996 Rolt et al.
5,503,152 A 4/1996 Oakley et al.
5,503,320 A 4/1996 Webster et al.
5,507,790 A 4/1996 Weiss
5,520,188 A 5/1996 Hennige et al.
5,522,869 A 6/1996 Burdette et al.
5,523,058 A 6/1996 Umemura et al.
5,524,620 A 6/1996 Rosenschein
5,524,624 A 6/1996 Tepper
5,524,625 A 6/1996 Okazaki et al.
5,526,624 A 6/1996 Berg
5,526,812 A 6/1996 Dumoulin et al.
5,526,814 A 6/1996 Cline et al.
5,526,815 A 6/1996 Granz et al.
5,529,070 A 6/1996 Augustine et al.
5,540,235 A 7/1996 Wilson
5,558,092 A 9/1996 Unger et al.
5,560,362 A 10/1996 Sliwa et al.
5,575,291 A 11/1996 Hayakawa
5,575,807 A 11/1996 Faller
5,577,502 A 11/1996 Darrow et al.
5,577,507 A 11/1996 Snyder et al.
5,577,991 A 11/1996 Akui et al.
5,580,575 A 12/1996 Unger et al.
5,601,526 A 2/1997 Chapelon et al.
5,603,323 A 2/1997 Pflugrath et al.
5,609,562 A 3/1997 Kaali
5,615,091 A 3/1997 Palatnik
5,617,858 A 4/1997 Taverna et al.
5,618,275 A 4/1997 Bock
5,620,479 A 4/1997 Diederich
5,622,175 A 4/1997 Sudol et al.
5,638,819 A 6/1997 Manwaring et al.
5,643,179 A 7/1997 Fujimoto
5,644,085 A 7/1997 Lorraine et al.
5,647,373 A 7/1997 Paltieli
5,655,535 A 8/1997 Friemel et al.
5,655,538 A 8/1997 Lorraine
5,657,760 A 8/1997 Ying et al.
5,658,328 A 8/1997 Johnson
5,660,836 A 8/1997 Knowlton
5,662,116 A 9/1997 Kondo et al.
5,665,053 A 9/1997 Jacobs
5,665,141 A 9/1997 Vago
5,671,746 A 9/1997 Dreschel et al.
5,673,699 A 10/1997 Trahey et al.
5,676,692 A 10/1997 Sanghvi et al.
5,685,820 A 11/1997 Riek et al.
5,690,608 A 11/1997 Watanabe
5,694,936 A 12/1997 Fujimoto et al.
5,697,897 A 12/1997 Buchholtz et al.
5,701,900 A 12/1997 Shehada et al.
5,704,361 A 1/1998 Seward et al.
5,706,252 A 1/1998 Le Verrier et al.
5,706,564 A 1/1998 Rhyne
5,715,823 A 2/1998 Wood et al.
5,720,287 A 2/1998 Chapelon et al.
5,722,411 A 3/1998 Suzuki et al.
5,727,554 A 3/1998 Kalend et al.
5,735,280 A 4/1998 Sherman et al.
5,743,863 A 4/1998 Chapelon
5,746,005 A 5/1998 Steinberg
5,746,762 A 5/1998 Bass
5,748,767 A 5/1998 Raab
5,749,364 A 5/1998 Sliwa et al.
5,755,228 A 5/1998 Wilson et al.
5,755,753 A 5/1998 Knowlton
5,762,066 A 6/1998 Law et al.
5,763,886 A 6/1998 Schulte
5,769,790 A 6/1998 Watkins et al.
5,779,644 A 7/1998 Eberle et al.
5,792,058 A 8/1998 Lee et al.
5,795,297 A 8/1998 Daigle
5,795,311 A 8/1998 Wess
5,810,009 A 9/1998 Mine et al.
5,810,888 A 9/1998 Fenn
5,814,599 A 9/1998 Mitragotri et al.
5,817,013 A 10/1998 Ginn et al.
5,817,021 A 10/1998 Reichenberger
5,820,564 A 10/1998 Slayton
5,823,962 A 10/1998 Schaetzle et al.
5,827,204 A 10/1998 Grandia et al.
5,840,032 A 11/1998 Hatfield et al.
5,844,140 A 12/1998 Seale
5,853,367 A 12/1998 Chalek et al.
5,869,751 A 2/1999 Bonin
5,871,524 A 2/1999 Knowlton
5,873,902 A 2/1999 Sanghvi et al.
5,876,431 A 3/1999 Spehr et al.
5,879,303 A 3/1999 Averkiou et al.
5,882,557 A 3/1999 Hayakawa
5,891,034 A 4/1999 Bucholz
5,899,861 A 5/1999 Friemel et al.
5,904,659 A 5/1999 Duarte
5,919,219 A 7/1999 Knowlton
5,923,099 A 7/1999 Bilir
5,924,989 A 7/1999 Polz
5,928,169 A 7/1999 Schaetzle et al.
5,931,805 A 8/1999 Brisken
5,938,606 A 8/1999 Bonnefous
5,938,612 A 8/1999 Kline-Schoder
5,948,011 A 9/1999 Knowlton
5,957,844 A 9/1999 Dekel
5,957,882 A 9/1999 Nita et al.
5,957,941 A 9/1999 Ream
5,967,980 A 10/1999 Ferre et al.
5,968,034 A 10/1999 Fulmer
5,971,949 A 10/1999 Levin
5,977,538 A 11/1999 Unger et al.
5,984,882 A 11/1999 Rosenschein et al.
5,990,598 A 11/1999 Sudol et al.
5,997,471 A 12/1999 Gumb et al.
5,997,497 A 12/1999 Nita et al.
5,999,843 A 12/1999 Anbar
6,004,262 A 12/1999 Putz et al.
6,007,499 A 12/1999 Martin et al.
6,013,032 A 1/2000 Savord
6,014,473 A * 1/2000 Hossack A61B 8/145 348/169
6,016,255 A 1/2000 Bolan et al.
6,019,724 A 2/2000 Gronningsaeter et al.
6,022,308 A 2/2000 Williams
6,022,327 A 2/2000 Chang
6,036,646 A 3/2000 Barthe
6,039,048 A 3/2000 Silberg
6,039,689 A 3/2000 Lizzi
6,042,556 A 3/2000 Beach et al.
6,049,159 A 4/2000 Barthe
6,050,943 A 4/2000 Slayton et al.
6,059,727 A 5/2000 Fowlkes
6,071,239 A 6/2000 Cribbs et al.
6,080,108 A 6/2000 Dunham
6,083,148 A 7/2000 Williams
6,086,535 A 7/2000 Ishibashi et al.
6,086,580 A 7/2000 Mordon et al.
6,090,054 A 7/2000 Tagishi
6,093,883 A 7/2000 Sanghvi
6,101,407 A 8/2000 Groezinger
6,106,469 A 8/2000 Suzuki et al.
6,113,558 A 9/2000 Rosenschein et al.
6,113,559 A 9/2000 Klopotek
6,120,452 A 9/2000 Barthe
6,123,081 A 9/2000 Durette
6,126,619 A 10/2000 Peterson et al.
6,135,971 A 10/2000 Hutchinson et al.
6,139,499 A 10/2000 Wilk
6,159,150 A 12/2000 Yale et al.
6,171,244 B1 1/2001 Finger et al.

(56) **References Cited**

U.S. PATENT DOCUMENTS

6,176,840 B1 1/2001 Nishimura
6,183,426 B1 2/2001 Akisada
6,183,502 B1 2/2001 Takeuchi
6,183,773 B1 2/2001 Anderson
6,190,323 B1 2/2001 Dias et al.
6,190,336 B1 2/2001 Duarte
6,193,658 B1 2/2001 Wendelken et al.
6,210,327 B1 4/2001 Brackett et al.
6,213,948 B1 4/2001 Barthe
6,216,029 B1 4/2001 Paltieli
6,233,476 B1 5/2001 Strommer et al.
6,234,990 B1 5/2001 Rowe et al.
6,241,753 B1 6/2001 Knowlton
6,246,898 B1 6/2001 Vesely et al.
6,251,074 B1 6/2001 Averkiou et al.
6,251,088 B1 6/2001 Kaufman et al.
6,268,405 B1 7/2001 Yao
6,273,864 B1 8/2001 Duarte
6,280,402 B1 8/2001 Ishibashi et al.
6,287,257 B1 9/2001 Matichuk
6,296,619 B1 10/2001 Brisken
6,301,989 B1 10/2001 Brown et al.
6,309,355 B1 10/2001 Cain et al.
6,311,090 B1 10/2001 Knowlton
6,315,741 B1 11/2001 Martin
6,322,509 B1 11/2001 Pan et al.
6,322,532 B1 11/2001 D'Sa
6,325,540 B1 12/2001 Lounsberry et al.
6,325,758 B1 12/2001 Carol et al.
6,325,769 B1 12/2001 Klopotek
6,325,798 B1 12/2001 Edwards et al.
6,338,716 B1 1/2002 Hossack et al.
6,350,276 B1 2/2002 Knowlton
6,356,780 B1 3/2002 Licato et al.
6,361,531 B1 3/2002 Hissong
6,370,411 B1 4/2002 Osadchy et al.
6,375,672 B1 4/2002 Aksan et al.
6,377,854 B1 4/2002 Knowlton
6,377,855 B1 4/2002 Knowlton
6,381,497 B1 4/2002 Knowlton
6,381,498 B1 4/2002 Knowlton
6,387,380 B1 5/2002 Knowlton
6,390,982 B1 5/2002 Bova et al.
6,405,090 B1 6/2002 Knowlton
6,409,720 B1 6/2002 Hissong
6,413,216 B1 7/2002 Cain et al.
6,413,253 B1 7/2002 Koop
6,413,254 B1 7/2002 Hissong
6,419,648 B1 7/2002 Vitek
6,423,007 B2 7/2002 Lizzi et al.
6,425,865 B1 7/2002 Salcudean
6,425,867 B1 7/2002 Vaezy et al.
6,425,912 B1 7/2002 Knowlton
6,428,477 B1 8/2002 Mason
6,428,532 B1 8/2002 Doukas
6,430,446 B1 8/2002 Knowlton
6,432,067 B1 8/2002 Martin
6,432,101 B1 8/2002 Weber
6,436,061 B1 8/2002 Costantino
6,438,424 B1 8/2002 Knowlton
6,440,071 B1 8/2002 Slayton et al.
6,440,121 B1 8/2002 Weber et al.
6,443,914 B1 9/2002 Costantino
6,453,202 B1 9/2002 Knowlton
6,461,304 B1 * 10/2002 Tanaka A61B 1/0008 600/462
6,461,378 B1 10/2002 Knowlton
6,470,216 B1 10/2002 Knowlton
6,488,626 B1 12/2002 Lizzi et al.
6,491,657 B2 12/2002 Rowe
6,500,121 B1 12/2002 Slayton
6,500,141 B1 12/2002 Irion
6,508,774 B1 1/2003 Acker et al.
6,511,427 B1 1/2003 Sliwa, Jr. et al.
6,511,428 B1 1/2003 Azuma
6,514,244 B2 2/2003 Pope
6,517,484 B1 2/2003 Wilk et al.
6,524,250 B1 2/2003 Weber
6,540,679 B2 4/2003 Slayton
6,540,685 B1 4/2003 Rhoads et al.
6,540,700 B1 4/2003 Fujimoto et al.
6,554,771 B1 4/2003 Buil et al.
6,569,099 B1 5/2003 Babaev
6,572,552 B2 6/2003 Fukukita
6,575,956 B1 6/2003 Brisken et al.
6,595,934 B1 7/2003 Hissong
6,599,256 B1 7/2003 Acker
6,607,498 B2 8/2003 Eshel
6,618,620 B1 9/2003 Freundlich et al.
6,623,430 B1 9/2003 Slayton
6,626,854 B2 9/2003 Friedman
6,626,855 B1 9/2003 Weng et al.
6,638,226 B2 10/2003 He et al.
6,645,162 B2 11/2003 Friedman
6,662,054 B2 12/2003 Kreindel
6,663,627 B2 12/2003 Francischelli
6,665,806 B1 12/2003 Shimizu
6,666,835 B2 12/2003 Martin
6,669,638 B1 12/2003 Miller et al.
6,685,640 B1 2/2004 Fry
6,692,450 B1 2/2004 Coleman
6,699,237 B2 3/2004 Weber
6,716,184 B2 4/2004 Vaezy et al.
6,719,449 B1 4/2004 Laughlin
6,719,694 B2 4/2004 Weng et al.
6,726,627 B1 4/2004 Lizzi et al.
6,749,624 B2 6/2004 Knowlton
6,773,409 B2 8/2004 Truckai et al.
6,775,404 B1 8/2004 Pagoulatos et al.
6,790,187 B2 9/2004 Thompson et al.
6,824,516 B2 11/2004 Batten et al.
6,835,940 B2 12/2004 Morikawa et al.
6,846,290 B2 1/2005 Lizzi et al.
6,875,176 B2 4/2005 Mourad
6,882,884 B1 4/2005 Mosk et al.
6,887,239 B2 5/2005 Elstrom et al.
6,889,089 B2 5/2005 Behl
6,896,657 B2 5/2005 Willis
6,902,536 B2 6/2005 Manna et al.
6,905,466 B2 6/2005 Salgo
6,918,907 B2 7/2005 Kelly
6,920,883 B2 7/2005 Bessette
6,921,371 B2 7/2005 Wilson
6,932,771 B2 8/2005 Whitmore
6,932,814 B2 8/2005 Wood
6,936,044 B2 8/2005 McDaniel
6,936,046 B2 8/2005 Hissong
6,945,937 B2 9/2005 Culp et al.
6,948,843 B2 9/2005 Laugharn et al.
6,953,941 B2 10/2005 Nakano et al.
6,958,043 B2 10/2005 Hissong
6,971,994 B1 12/2005 Young et al.
6,974,417 B2 12/2005 Lockwood et al.
6,976,492 B2 12/2005 Ingle
6,992,305 B2 1/2006 Maezawa et al.
6,997,923 B2 2/2006 Anderson
7,006,874 B2 2/2006 Knowlton
7,020,528 B2 3/2006 Neev
7,022,089 B2 4/2006 Ooba et al.
7,058,440 B2 6/2006 Heuscher et al.
7,063,666 B2 6/2006 Weng et al.
7,070,565 B2 7/2006 Vaezy et al.
7,074,218 B2 7/2006 Washington et al.
7,094,252 B2 8/2006 Koop
7,108,663 B2 9/2006 Talish et al.
7,115,123 B2 10/2006 Knowlton
7,122,029 B2 10/2006 Koop et al.
7,142,905 B2 11/2006 Slayton
7,165,451 B1 1/2007 Brooks et al.
7,179,238 B2 2/2007 Hissong
7,189,230 B2 3/2007 Knowlton
7,229,411 B2 6/2007 Slayton
7,235,592 B2 6/2007 Muratoglu
7,258,674 B2 8/2007 Cribbs

(56) **References Cited**

U.S. PATENT DOCUMENTS

7,273,459 B2 9/2007 Desilets
7,294,125 B2 11/2007 Phalen et al.
7,297,117 B2 11/2007 Trucco et al.
7,303,555 B2 12/2007 Makin et al.
7,331,951 B2 2/2008 Eshel et al.
7,347,855 B2 3/2008 Eshel
RE40,403 E 6/2008 Cho et al.
7,393,325 B2 7/2008 Barthe
7,398,116 B2 7/2008 Edwards
7,399,279 B2 7/2008 Abend et al.
7,491,171 B2 2/2009 Barthe et al.
7,510,536 B2 3/2009 Foley et al.
7,530,356 B2 5/2009 Slayton
7,530,958 B2 5/2009 Slayton
7,571,336 B2 8/2009 Barthe
7,601,120 B2 10/2009 Moilanen et al.
7,615,015 B2 11/2009 Coleman
7,615,016 B2 11/2009 Barthe
7,686,763 B2 3/2010 Vaezy et al.
7,695,437 B2 4/2010 Quistgaard et al.
7,758,524 B2 7/2010 Barthe
7,789,841 B2 9/2010 Huckle et al.
7,824,348 B2 11/2010 Barthe et al.
7,857,773 B2 12/2010 Desilets et al.
7,875,023 B2 1/2011 Eshel et al.
7,914,453 B2 3/2011 Slayton et al.
7,914,469 B2 3/2011 Torbati
7,931,611 B2 4/2011 Novak et al.
7,955,281 B2 6/2011 Pedersen et al.
7,967,764 B2 6/2011 Lidgren et al.
8,057,389 B2 11/2011 Barthe et al.
8,057,465 B2 11/2011 Sliwa, Jr. et al.
8,066,641 B2 11/2011 Barthe et al.
8,123,707 B2 2/2012 Huckle et al.
8,128,618 B2 3/2012 Gliklich et al.
8,133,180 B2 3/2012 Slayton et al.
8,133,191 B2 3/2012 Rosenberg et al.
8,166,332 B2 4/2012 Barthe et al.
8,197,409 B2 6/2012 Foley et al.
8,206,299 B2 6/2012 Foley et al.
8,211,017 B2 7/2012 Foley et al.
8,262,591 B2 9/2012 Pedersen et al.
8,273,037 B2 9/2012 Kreindel et al.
8,282,554 B2 10/2012 Makin et al.
8,333,700 B1 12/2012 Barthe et al.
8,366,622 B2 2/2013 Slayton et al.
8,409,097 B2 4/2013 Slayton et al.
8,444,562 B2 5/2013 Barthe et al.
8,480,585 B2 7/2013 Slayton et al.
8,506,486 B2 8/2013 Slayton et al.
8,523,775 B2 9/2013 Barthe et al.
8,535,228 B2 9/2013 Slayton et al.
8,585,618 B2 11/2013 Hunziker et al.
2001/0009997 A1 7/2001 Pope
2001/0009999 A1 7/2001 Kaufman et al.
2001/0014780 A1 8/2001 Martin et al.
2001/0014819 A1 8/2001 Ingle et al.
2001/0031922 A1 10/2001 Weng et al.
2001/0039380 A1 11/2001 Larson et al.
2001/0041880 A1 11/2001 Brisken
2002/0000763 A1 1/2002 Jones
2002/0040199 A1 4/2002 Klopotek
2002/0040442 A1 4/2002 Ishidera
2002/0055702 A1 5/2002 Atala
2002/0062077 A1 5/2002 Emmenegger et al.
2002/0062142 A1 5/2002 Knowlton
2002/0072691 A1 6/2002 Thompson et al.
2002/0082528 A1 6/2002 Friedman et al.
2002/0082529 A1 6/2002 Suorsa et al.
2002/0082589 A1 6/2002 Friedman et al.
2002/0087080 A1 7/2002 Slayton et al.
2002/0095143 A1 7/2002 Key
2002/0115917 A1 8/2002 Honda et al.
2002/0128648 A1 9/2002 Weber
2002/0143252 A1 10/2002 Dunne et al.
2002/0156400 A1 10/2002 Babaev
2002/0161357 A1 10/2002 Anderson
2002/0165529 A1 11/2002 Danek
2002/0168049 A1 11/2002 Schriever
2002/0169394 A1 11/2002 Eppstein et al.
2002/0169442 A1 11/2002 Neev
2002/0173721 A1 11/2002 Grunwald et al.
2002/0193784 A1 12/2002 Mchale et al.
2002/0193831 A1 12/2002 Smith
2003/0009153 A1 1/2003 Brisken et al.
2003/0014039 A1 1/2003 Barzell et al.
2003/0018255 A1 1/2003 Martin
2003/0028111 A1 2/2003 Vaezy et al.
2003/0028113 A1 2/2003 Gilbert et al.
2003/0032900 A1 2/2003 Ella
2003/0036706 A1 2/2003 Slayton
2003/0040442 A1 2/2003 Yokouchi et al.
2003/0040739 A1 2/2003 Koop
2003/0050678 A1 3/2003 Sierra
2003/0055417 A1 3/2003 Truckai et al.
2003/0060736 A1 3/2003 Martin et al.
2003/0065313 A1 4/2003 Koop
2003/0074023 A1 4/2003 Kaplan
2003/0083536 A1 5/2003 Eshel
2003/0092988 A1 5/2003 Makin
2003/0097071 A1 5/2003 Halmann et al.
2003/0099383 A1 5/2003 Lefebvre
2003/0125629 A1 7/2003 Ustuner
2003/0139790 A1 7/2003 Ingle et al.
2003/0171678 A1 9/2003 Batten et al.
2003/0171701 A1 9/2003 Babaev
2003/0176790 A1 9/2003 Slayton
2003/0191396 A1 10/2003 Sanghvi
2003/0200481 A1 10/2003 Stanley
2003/0212129 A1 11/2003 Liu et al.
2003/0212351 A1 11/2003 Hissong
2003/0212393 A1 11/2003 Knowlton
2003/0216795 A1 11/2003 Harth
2003/0220536 A1 11/2003 Hissong
2003/0220585 A1 11/2003 Hissong
2003/0229331 A1 12/2003 Brisken et al.
2003/0233085 A1 12/2003 Giammarusti
2003/0236487 A1 12/2003 Knowlton
2004/0000316 A1 1/2004 Knowlton
2004/0001809 A1 1/2004 Brisken
2004/0002705 A1 1/2004 Knowlton
2004/0010222 A1 1/2004 Nunomura et al.
2004/0015106 A1 1/2004 Coleman
2004/0030227 A1 2/2004 Littrup
2004/0039312 A1 2/2004 Hillstead
2004/0039418 A1 2/2004 Elstrom
2004/0041880 A1 3/2004 Ikeda et al.
2004/0042168 A1 3/2004 Yang et al.
2004/0044375 A1 3/2004 Diederich et al.
2004/0049134 A1 3/2004 Tosaya et al.
2004/0059266 A1 3/2004 Fry
2004/0073079 A1 4/2004 Altshuler et al.
2004/0073113 A1 4/2004 Salgo
2004/0073115 A1 4/2004 Horzewski et al.
2004/0073116 A1 4/2004 Smith
2004/0073204 A1 4/2004 Ryan et al.
2004/0077977 A1 4/2004 Ella et al.
2004/0082857 A1 4/2004 Schonenberger et al.
2004/0082859 A1 4/2004 Schaer
2004/0102697 A1 5/2004 Evron
2004/0105559 A1 6/2004 Aylward et al.
2004/0122323 A1 6/2004 Vortman et al.
2004/0122493 A1 6/2004 Ishbashi et al.
2004/0143297 A1 7/2004 Ramsey
2004/0152982 A1 8/2004 Hwang et al.
2004/0158150 A1 8/2004 Rabiner et al.
2004/0186535 A1 9/2004 Knowlton
2004/0189155 A1 9/2004 Funakubo
2004/0206365 A1 10/2004 Knowlton
2004/0210214 A1 10/2004 Knowlton
2004/0217675 A1 11/2004 Desilets
2004/0249318 A1 12/2004 Tanaka
2004/0254620 A1 12/2004 Lacoste et al.
2004/0267252 A1 12/2004 Washington

(56) **References Cited**

U.S. PATENT DOCUMENTS

2005/0033201 A1 2/2005 Takahashi
2005/0033316 A1 2/2005 Kertz
2005/0038340 A1 2/2005 Vaezy et al.
2005/0055073 A1 3/2005 Weber
2005/0061834 A1 3/2005 Garcia et al.
2005/0070961 A1 3/2005 Maki et al.
2005/0074407 A1 4/2005 Smith
2005/0080469 A1 4/2005 Larson
2005/0091770 A1 5/2005 Mourad et al.
2005/0096542 A1 5/2005 Weng et al.
2005/0113689 A1 5/2005 Gritzky
2005/0134314 A1 6/2005 Prather et al.
2005/0137656 A1 6/2005 Malak
2005/0143677 A1 6/2005 Young et al.
2005/0154313 A1 7/2005 Desilets
2005/0154314 A1 7/2005 Quistgaard
2005/0154332 A1 7/2005 Zanelli
2005/0154431 A1 7/2005 Quistgaard
2005/0187495 A1 8/2005 Quistgaard
2005/0191252 A1 9/2005 Mitsui
2005/0193451 A1 9/2005 Quistgaard et al.
2005/0197681 A1 9/2005 Barolet et al.
2005/0228281 A1 10/2005 Nefos
2005/0240170 A1 10/2005 Zhang et al.
2005/0251120 A1 11/2005 Anderson et al.
2005/0256406 A1 11/2005 Barthe
2005/0261584 A1 11/2005 Eshel
2005/0261585 A1 11/2005 Makin et al.
2005/0267454 A1 12/2005 Hissong
2005/0288748 A1 12/2005 Li et al.
2006/0004306 A1 1/2006 Altshuler
2006/0020260 A1 1/2006 Dover et al.
2006/0025756 A1 2/2006 Francischelli
2006/0042201 A1 3/2006 Curry
2006/0058664 A1 3/2006 Barthe
2006/0058671 A1 3/2006 Vitek et al.
2006/0058707 A1 3/2006 Barthe
2006/0058712 A1 3/2006 Altshuler et al.
2006/0074309 A1 4/2006 Bonnefous
2006/0074313 A1 4/2006 Slayton
2006/0074314 A1 4/2006 Slayton
2006/0074355 A1 4/2006 Slayton
2006/0079816 A1 4/2006 Barthe
2006/0079868 A1 4/2006 Makin
2006/0084891 A1 4/2006 Barthe
2006/0089632 A1 4/2006 Barthe
2006/0089688 A1 4/2006 Panescu
2006/0094988 A1 5/2006 Tosaya et al.
2006/0111744 A1 5/2006 Makin
2006/0116583 A1 6/2006 Ogasawara et al.
2006/0116671 A1 6/2006 Slayton
2006/0122508 A1 6/2006 Slayton
2006/0122509 A1 6/2006 Desilets
2006/0161062 A1 7/2006 Arditi et al.
2006/0184069 A1 8/2006 Vaitekunas
2006/0184071 A1 8/2006 Klopotek
2006/0189972 A1 8/2006 Grossman
2006/0206105 A1 9/2006 Chopra
2006/0229514 A1 10/2006 Wiener
2006/0241440 A1 10/2006 Eshel
2006/0241442 A1 10/2006 Barthe
2006/0241470 A1 10/2006 Novak et al.
2006/0250046 A1 11/2006 Koizumi et al.
2006/0282691 A1 12/2006 Barthe
2006/0291710 A1 12/2006 Wang et al.
2007/0032784 A1 2/2007 Gliklich
2007/0035201 A1 2/2007 Desilets
2007/0055154 A1 3/2007 Torbati
2007/0055155 A1 3/2007 Owen et al.
2007/0055156 A1 3/2007 Desilets et al.
2007/0065420 A1 3/2007 Johnson
2007/0083120 A1 4/2007 Cain et al.
2007/0087060 A1 4/2007 Dietrich
2007/0088245 A1 4/2007 Babaev et al.
2007/0088346 A1 4/2007 Mirizzi et al.
2007/0161902 A1 7/2007 Dan
2007/0166357 A1 7/2007 Shaffer et al.
2007/0167709 A1 7/2007 Slayton
2007/0208253 A1 9/2007 Slayton
2007/0219604 A1 9/2007 Yaroslavsky et al.
2007/0219605 A1 9/2007 Yaroslavsky et al.
2007/0238994 A1 10/2007 Stecco et al.
2007/0239075 A1 10/2007 Rosenberg et al.
2007/0239079 A1 10/2007 Manstein et al.
2007/0239142 A1 10/2007 Altshuler et al.
2008/0027328 A1 1/2008 Klopotek et al.
2008/0039724 A1 2/2008 Seip et al.
2008/0071255 A1 3/2008 Barthe
2008/0086054 A1 4/2008 Slayton
2008/0097253 A1 4/2008 Pederson
2008/0139974 A1 6/2008 Da Silva
2008/0146970 A1 6/2008 Litman et al.
2008/0167556 A1 7/2008 Thompson et al.
2008/0183077 A1 7/2008 Moreau-Gobard et al.
2008/0188745 A1 8/2008 Chen et al.
2008/0195000 A1 8/2008 Spooner et al.
2008/0200810 A1 8/2008 Buchalter
2008/0200813 A1 8/2008 Quistgaard
2008/0214966 A1 9/2008 Slayton
2008/0221491 A1 9/2008 Slayton
2008/0223379 A1 9/2008 Stuker et al.
2008/0243035 A1 10/2008 Crunkilton
2008/0269608 A1 10/2008 Anderson et al.
2008/0275342 A1 11/2008 Barthe
2008/0281206 A1 11/2008 Bartlett et al.
2008/0281236 A1 11/2008 Eshel et al.
2008/0281237 A1 11/2008 Slayton
2008/0281255 A1 11/2008 Slayton
2008/0294073 A1 11/2008 Barthe et al.
2008/0319356 A1 12/2008 Cain et al.
2009/0012394 A1 1/2009 Hobelsberger et al.
2009/0043198 A1 2/2009 Milner et al.
2009/0043293 A1 2/2009 Pankratov et al.
2009/0069677 A1 3/2009 Chen et al.
2009/0093737 A1 4/2009 Chomas et al.
2009/0156969 A1 6/2009 Santangelo
2009/0171252 A1 7/2009 Bockenstedt et al.
2009/0177122 A1 7/2009 Peterson
2009/0177123 A1 7/2009 Peterson
2009/0182231 A1 7/2009 Barthe et al.
2009/0216159 A1 8/2009 Slayton et al.
2009/0226424 A1 9/2009 Hsu
2009/0227910 A1 9/2009 Pedersen et al.
2009/0253988 A1 10/2009 Slayton et al.
2009/0318909 A1 12/2009 Debenedictis et al.
2010/0011236 A1 1/2010 Barthe et al.
2010/0022919 A1 1/2010 Peterson
2010/0022922 A1 1/2010 Barthe et al.
2010/0042020 A1 2/2010 Ben-Ezra
2010/0049178 A1 2/2010 Deem et al.
2010/0130891 A1 5/2010 Taggart et al.
2010/0160782 A1 6/2010 Slayton et al.
2010/0160837 A1 6/2010 Hunziker et al.
2010/0168576 A1 7/2010 Poland et al.
2010/0241035 A1 9/2010 Barthe et al.
2010/0280420 A1 11/2010 Barthe et al.
2010/0286518 A1 11/2010 Lee et al.
2011/0040171 A1 2/2011 Foley et al.
2011/0040190 A1 2/2011 Jahnke et al.
2011/0087099 A1 4/2011 Eshel et al.
2011/0087255 A1 4/2011 Mccormack et al.
2011/0112405 A1 5/2011 Barthe et al.
2011/0178444 A1 7/2011 Slayton et al.
2011/0190745 A1 8/2011 Uebelhoer et al.
2012/0004549 A1 1/2012 Barthe et al.
2012/0016239 A1 1/2012 Barthe et al.
2012/0029353 A1 2/2012 Slayton et al.
2012/0035475 A1 2/2012 Barthe et al.
2012/0035476 A1 2/2012 Barthe et al.
2012/0046547 A1 2/2012 Barthe et al.
2012/0053458 A1 3/2012 Barthe et al.
2012/0111339 A1 5/2012 Barthe et al.
2012/0143056 A1 6/2012 Slayton et al.
2012/0165668 A1 6/2012 Slayton et al.

(56) **References Cited**

U.S. PATENT DOCUMENTS

2012/0165848	A1	6/2012	Slayton et al.
2012/0197120	A1	8/2012	Makin et al.
2012/0197121	A1	8/2012	Slayton et al.
2012/0215105	A1	8/2012	Slayton et al.
2012/0271294	A1	10/2012	Barthe et al.
2012/0296240	A1	11/2012	Azhari et al.
2012/0316426	A1	12/2012	Foley et al.
2012/0330197	A1	12/2012	Makin et al.
2012/0330222	A1	12/2012	Barthe et al.
2012/0330223	A1	12/2012	Makin et al.
2013/0012755	A1	1/2013	Slayton
2013/0012816	A1	1/2013	Slayton et al.
2013/0012838	A1	1/2013	Jaeger et al.
2013/0012842	A1	1/2013	Barthe
2013/0018286	A1	1/2013	Slayton et al.
2013/0046209	A1	2/2013	Slayton et al.
2013/0066208	A1	3/2013	Barthe et al.
2013/0066237	A1	3/2013	Smotrich et al.
2013/0072826	A1	3/2013	Slayton et al.
2013/0096471	A1	4/2013	Slayton et al.
2013/0190659	A1	7/2013	Slayton et al.
2013/0211258	A1	8/2013	Barthe et al.
2013/0281853	A1	10/2013	Slayton et al.
2013/0281891	A1	10/2013	Slayton et al.
2013/0296700	A1	11/2013	Slayton et al.

FOREIGN PATENT DOCUMENTS

DE	10219217		11/2003
DE	10219297		11/2003
DE	20314479		3/2004
EP	0344773		12/1989
EP	1479412		11/1991
EP	0473553	A	3/1992
EP	0661029	A	7/1995
EP	1050322		11/2000
EP	1234566		8/2002
EP	1262160		12/2002
EP	1374944	A	1/2004
GB	2113099		8/1983
JP	63036171		2/1988
JP	03048299		3/1991
JP	3123559		5/1991
JP	03136642		6/1991
JP	4089058		3/1992
JP	04150847		5/1992
JP	7080087		3/1995
JP	07505793		6/1995
JP	7222782		8/1995
JP	09047458		2/1997
JP	11505440		5/1999
JP	11506636		6/1999
JP	2000166940		6/2000
JP	2001170068		6/2001
JP	2002078764		3/2002
JP	2002515786		5/2002
JP	2002521118		7/2002
JP	2002537939		11/2002
JP	2003050298		2/2003
JP	2003204982		7/2003
JP	2004147719		5/2004
JP	2005503388		2/2005
JP	2005527336		9/2005
JP	2005323213		11/2005
JP	2006520247		9/2006
JP	2007505793	A	3/2007
JP	2009518126		5/2009
JP	2010517695		5/2010
KR	1020010024871		3/2001
KR	100400870	B1	10/2003
KR	1020060113930		11/2006
KR	1020070065332		6/2007
KR	1020070070161		7/2007
KR	1020070098856		10/2007
KR	1020070104878		10/2007
KR	1020070114105		11/2007
KR	1020000059516		4/2012
WO	9625888		8/1996
WO	9735518		10/1997
WO	9832379		7/1998
WO	9933520		7/1999
WO	9949788		10/1999
WO	0006032		2/2000
WO	0015300		3/2000
WO	0021612		4/2000
WO	0053113		9/2000
WO	0128623		4/2001
WO	0182777		11/2001
WO	0182778		11/2001
WO	0187161		11/2001
WO	0209813		2/2002
WO	0224050		3/2002
WO	02092168	A	11/2002
WO	020292168		11/2002
WO	03053266	A	7/2003
WO	03065347		8/2003
WO	03070105		8/2003
WO	03077833		8/2003
WO	03086215		10/2003
WO	03096883		11/2003
WO	03099177		12/2003
WO	03101530		12/2003
WO	2004000116	A	12/2003
WO	2004080147		9/2004
WO	2004110558		12/2004
WO	2005011804	A	2/2005
WO	2005065408		7/2005
WO	2005090978		9/2005
WO	2006036870		4/2006
WO	2006042163	A	4/2006
WO	2006042168		4/2006
WO	2006042201		4/2006
WO	2006065671		6/2006
WO	2006082573		8/2006
WO	2007067563	A	6/2007
WO	2008036622	A	3/2008
WO	2009013729		1/2009

OTHER PUBLICATIONS

European Examination Report in related Application No. 09835856.7 dated Apr. 11, 2004.

European Examination Report in related Application No. 09835856.7 dated Apr. 11, 2014.

International Search Report and Written Opinion dated Apr. 6, 2012 in Application No. PCT/US2011/001366.

Jeffers et al., "Evaluation of the Effect of Cavitation Activity on Drug-Ultrasound Synergisms," 1993 IEEE Ultrasonics Symposium, pp. 925-928.

Alster, Tinas S., Tanzi, Elizabeth L., "Cellulite Treatment using a Novel Combination Radiofrequency, Infrared Light, and Mechanical Tissue Manipulation Device," Journal of Cosmetic & Laser Therapy, Jun. 2005, vol. 7, Issue 2, pp. 81-85.

Arthur et al., "Non-invasive estimation of hyperthermia temperatures with ultrasound," Int. J. Hyperthermia, Sep. 2005, 21(6), pp. 589-600.

Barthe et al., "Ultrasound therapy system and abiation results utilizing miniature imaging/therapy arrays," Ultrasonics Symposium, 2004 IEEE, Aug. 23, 2004, pp. 1792-1795, vol. 3.

Chen, L. et al., ""Effect of Blood Perfusion on the ablation of liver perenchyma with high intensity focused ultrasound,"" Phys. Med. Biol; 38:1661-1673; 1993b.

Coon, Joshua et al., "Protein identification using sequential ion/ion reactions and tandem mass spectometry" Proceedings of the National Academy of Sciences of the USA, vol. 102, No. 27, Jul. 5, 2005, pp. 9463-9468.

Corry, Peter M., et al., "Human Cancer Treatment with Ultrasound", IEEE Transactions on Sonics and Ultrasonics, vol. SU-31, No. 5, Sep. 1984, pp. 444,456.

(56) **References Cited**

OTHER PUBLICATIONS

Damianou et al., Application of the Thermal Dose Concept for Predicting the Necrosed Tissue Volume During Ultrasound Surgery, 1993 IEEE Ultrasound Symposium, pp. 1199-1202.
Daum et al., "Design and Evaluation of a Feedback Based Phased Array System for Ultrasound Surgery," IEEE Transactions on Ultrasonics, Feroelectronics, and Frequency Control, vol. 45, No. 2, Mar. 1998, pp. 431-438.
Davis, Brian J., et al., "An Acoustic Phase Shift Technique for the Non-Invasive Measurement of Temperature Changes in Tissues", 1985 Ultrasonics Symposium, pp. 921-924.
Fry, W.J. et al., "Production of Focal Destructive Lesions in the Central Nervous System with Ultrasound," J. Neurosurg., 11:471-478; 1954.
Gliklich et al., Clinical Pilot Study of Intense Ultrasound therapy to Deep Dermal Facial Skin and Subcutaneous Tissues, Arch Facial Plastic Surgery, Mar. 1, 2007, vol. 9.
Harr, G.R. et al., "Tissue Destruction with Focused Ultrasound in Vivo," Eur. Urol. 23 (suppl. 1):8-11; 1993.
Hassan et al., "Structure and Applications of Poly(vinyl alcohol) Hydrogels Produced by Conventional Crosslinking or by Freezing/Thawing Methods," advanced in Polymer Science, 2000, pp. 37-65, vol. 153.
Hassan et al., "Structure and Morphology of Freeze/Thawed PVA Hydrogels," Macromolecules, Mar. 11, 2000, pp. 2472-2479, vol. 33, No. 7.
Husseini et al, "The Role of Cavitation in Acoustically Activated Drug Delivery," J. Control Release, Oct. 3, 2005, pp. 253-261, vol. 107(2).
Husseini et al. "Investigating the mechanism of accoustically activated uptake of drugs from Pluronic micelles," BMD Cancer 2002, 2:20k, Aug. 30, 2002, pp. 1-6.
International Search Report and Written Opinion dated Apr. 6, 2012 in Application No. PCT/US2011/001367.
Jenne, J., et al., "Temperature Mapping for High Energy US-Therapy", 1994 Ultrasonics Symposium, pp. 1879-1882.
Johnson, S.A., et al., "Non-Intrusive Measurement of Microwave and Ultrasound-Induced Hyperthermia by Acoustic temperature Tomography", Ultrasonics Symposium Proceedings, pp. 977-982.
Madersbacher, S. et al., "Tissue Ablation in Bening Prostatic Hyperplasia with High Intensity Focused Ultrasound," Dur. Urol., 23 (suppl. 1):39-43; 1993.
Makin et al, "B-Scan Imaging and Thermal Lesion Monitoring Using Miniaturized Dual-Functionality Ultrasound Arrays," Ultrasonics Symposium, 2004 IEEE, Aug. 23, 2004, pp. 1788-1791, vol. 3.
Makin et al, "Miniaturized Ultrasound Arrays for Interstitial Ablation and Imaging," UltraSound Med. Biol. 2005, Nov. 1, 2005, pp. 1539-1550, vol. 31(11).
Makin et al., "Confirmal Bulk Ablation and Therapy Monitoring Using Intracorporeal Image-Treat Ultrasound Arrays", 4th International Symposium on Therapeutic Ultrasound, Sep. 19, 2004.
Manohar et al, "Photoaccoustic mammography laboratory prototype: imaging of breast tissue phantoms," Journal of Biomedical Optics, Nov./Dec. 2004, pp. 1172-1181, vol. 9, No. 6.
Mast et al, "Bulk Ablation of Soft Tissue with Intense Ultrasound; Modeling nad Experiments," J. Acoust. Soc. Am., Oct. 1, 2005, pp. 2715-2724, vol. 118(4).
Mitragotri, Samir; "Healing sound: the use of ultrasound in drug delivery and other therapeutic applications," Nature Reviews; Drug Delivery, pp. 255-260, vol. 4.
Paradossi et al., "Poly(vinyl alcohol) as versatile biomaterial for potential biomedical applications," Journal of Materials Science: Materials in Medicine, 2003, pp. 687-691, vol. 14.
PCT/US2012/046122 International Search Report dated Jan. 30, 2013.
PCT/US2012/046123 International Search Report dated Jan. 28, 2013.
PCT/US2012/046125 International Search Report dated Jan. 28, 2013.
Reid, Gavin, et al., "Tandem Mass spectrometry of ribonuclease A and B: N-linked glycosylation site analysis of whole protein ions," Analytical Chemistry. Feb. 1, 2002, vol. 74, No. 3, pp. 577-583.
Righetti et al, "Elastographic Characterization of HIFU-Induced Lesions in Canine Livers," 1999, Ultrasound in Med & Bio, vol. 25, No. 7, pp. 1099-1113.
Saad et al., "Ultrasound-Enhanced Effects of Adriamycin Against Murine Tumors," Ultrasound in Med. & Biol. vol. 18, No. 8, pp. 715-723 (1992).
Sanghvi, N.T., et al., "Transrectal Ablation of Prostrate Tissue Using Focused Ultrasound," 1993 Ultrasonics Symposium, IEEE, pp. 1207-1210.
Sassen, Sander, "ATI's R520 architecture, the new king of the hill?" http://www.hardwareanalysis.com/content/article/1813, Sep. 16, 2005, 2 pages.
Seip, Ralf, et al., "Noninvasive Detection of Thermal Effects Due to Highly Focused Ultrasonic Fiels," IEEE Symposium, pp. 1229-1232, vol. 2, Oct. 3-Nov. 1993.
Seip, Ralf, et al., "Noninvasive Estimation of Tissue Temperature Response to Heating Fields Using Diagnostic Ultrasound," IEEE Transactions on Biomedical Engineering, vol. 42, No. 8, Aug. 1995, pp. 828-839.
Simon et al., "Applications of Lipid-Coated Microbubble Ultrasonic Contrast to Tumor Therapy," Ultrasound in Med. & Biol. vol. 19, No. 2, pp. 123-125 (1993).
Smith, Nadine Barrie, et al., "Non-Invasive In Vivo Temperature Mapping of Ultrasound Heating Using Magnetic Resonance Techniques", 1994 Ultrasonics Symposium, pp. 1829-1832, vol. 3.
Surry et al., "Poly(vinyl alcohol) cryogel phantoms for use in ultrasound and MR imaging," Phys. Med. Biol., Dec. 6, 2004, pp. 5529-5546, vol. 49.
Syka J. E. P. et al., "Peptide and Protein Sequence Analysis by Electron Transfer Dissociation Mass Spectometry," Proceedings of the National Academy of Sciences of USA, National Academy of Aceince, Washington, DC, vol. 101, No. 26, Jun. 29, 2004, pp. 9528-9533.
Talbert, D. G., "An Add-on Modification for Linear Array Real-Time Ultrasound Scanners to Produce 3D Displays," UTS Int'l 1977 Brighton, England (Jun. 28-30, 1977) pp. 57-67.
Tata et al., "Interaction of Ultrasound and Model Membrane Systems: Analyses and Predictions," American Chemical Society, Phys. Chem. 1992, 96, pp. 3548-3555.
Ueno, S., et al., "Ultrasound Thermometry in Hyperthermia", 1990 Ultrasonic Symposium, pp. 1645-1652.
Wang, H., et al., "Limits on Focused Ultrasound for Deep Hyperthermia", 1994 Ultrasonic Symposium, Nov. 1-4, 1994, pp. 1869-1872, vol. 3.
Wasson, Scott, "NVIDIA's GeFroce 7800 GTX graphics processor Power MADD," http://techreport.com/reviews/2005q2/geforce-7800gtx/index.x?pg=1, Jun. 22, 2005, 4 pages.
White et al "Selective Creation of Thermal Injury Zones in the Superficial Musculoaponeurotic System Using Intense Ultrasound Therapy," Arch Facial Plastic Surgery, Jan./Feb. 2007, vol. 9, No. 1.
European Examination Report in related Application No. 05808908.7 dated Jun. 29, 2009.
European Examination Report in related Application No. 05810308.6 dated Jun. 29, 2009.
European Examination Report in related Application No. 10185100.4 dated Jan. 6, 2014.
European Examination Report in related Application No. 10185120.2 dated Jan. 22, 2014.
Decision of the Korean Intellectual Property Tribunal dated Jun. 28, 2013 regarding Korean Patent No. 10-1142108, which is related to the pending application and/or an application identified in the Table on the pp. 2-5 of the information Disclosure Statement herein (English translation, English translation certification, and Korean decision included).
International Search Report and Written Opinion dated Jan. 23, 2014 in Application No. PCT/US2012/046122.
International Search Report and Written Opinion dated Jan. 23, 2014 in Application No. PCT/US2012/046123.
International Search Report and Written Opinion dated Jan. 28, 2012 in Application No. PCT/US2012/046327.

(56) **References Cited**

OTHER PUBLICATIONS

International Search Report and Written Opinion dated Jan. 28, 2013 in Application No. PCT/US2012/046125.
International Search Report and Written Opinion dated Feb. 14, 2013 in Application No. PCT/US2011/001361.
International Search Report and Written Opinion dated Feb. 14, 2013 in Application No. PCT/US2011/001362.
International Search Report and Written Opinion dated Feb. 14, 2013 in Application No. PCT/US2011/001366.

* cited by examiner

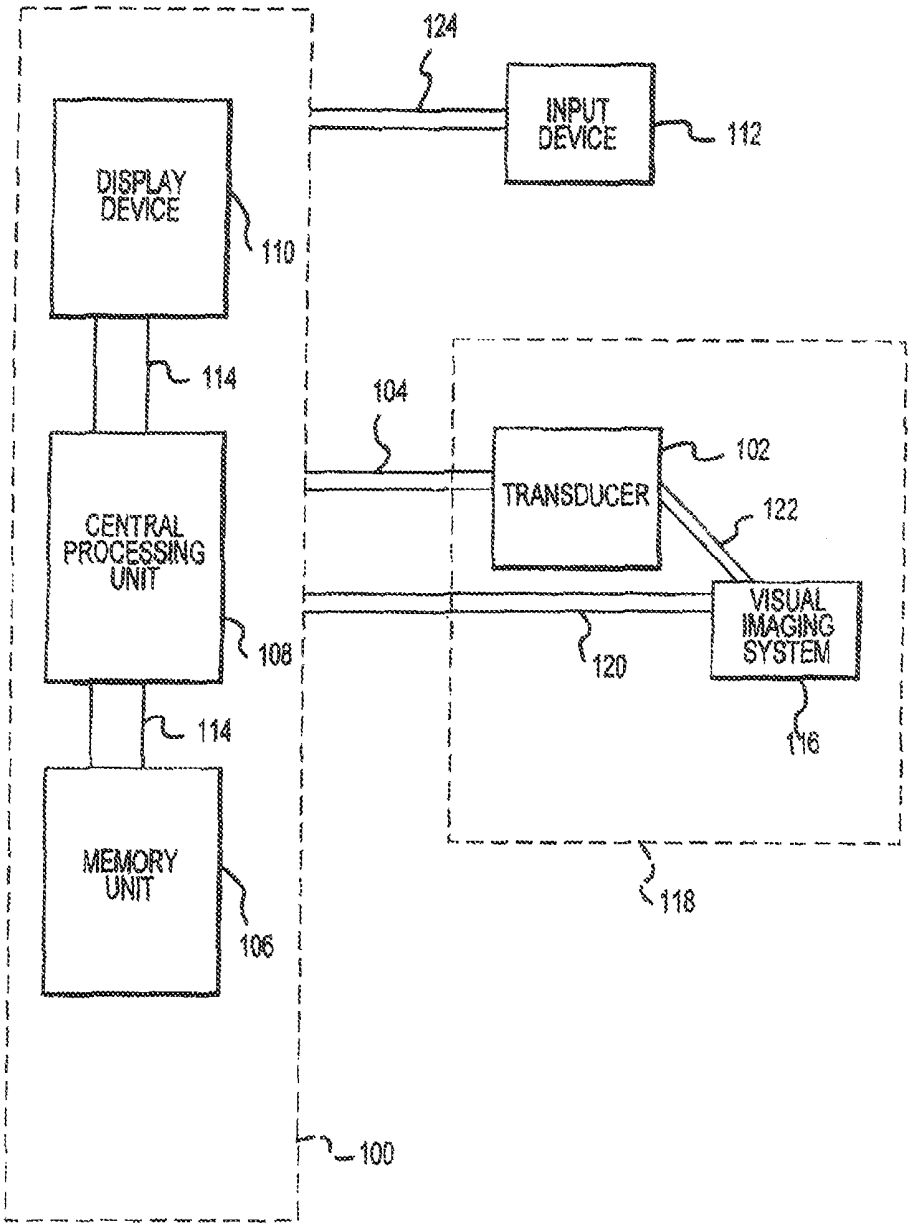
124
INPUT DEVICE
112
DISPLAY DEVICE
110
114
104
TRANSDUCER
102
122
CENTRAL PROCESSING UNIT
108
VISUAL IMAGING SYSTEM
120
116
114
MEMORY UNIT
106
118
100

FIG.1

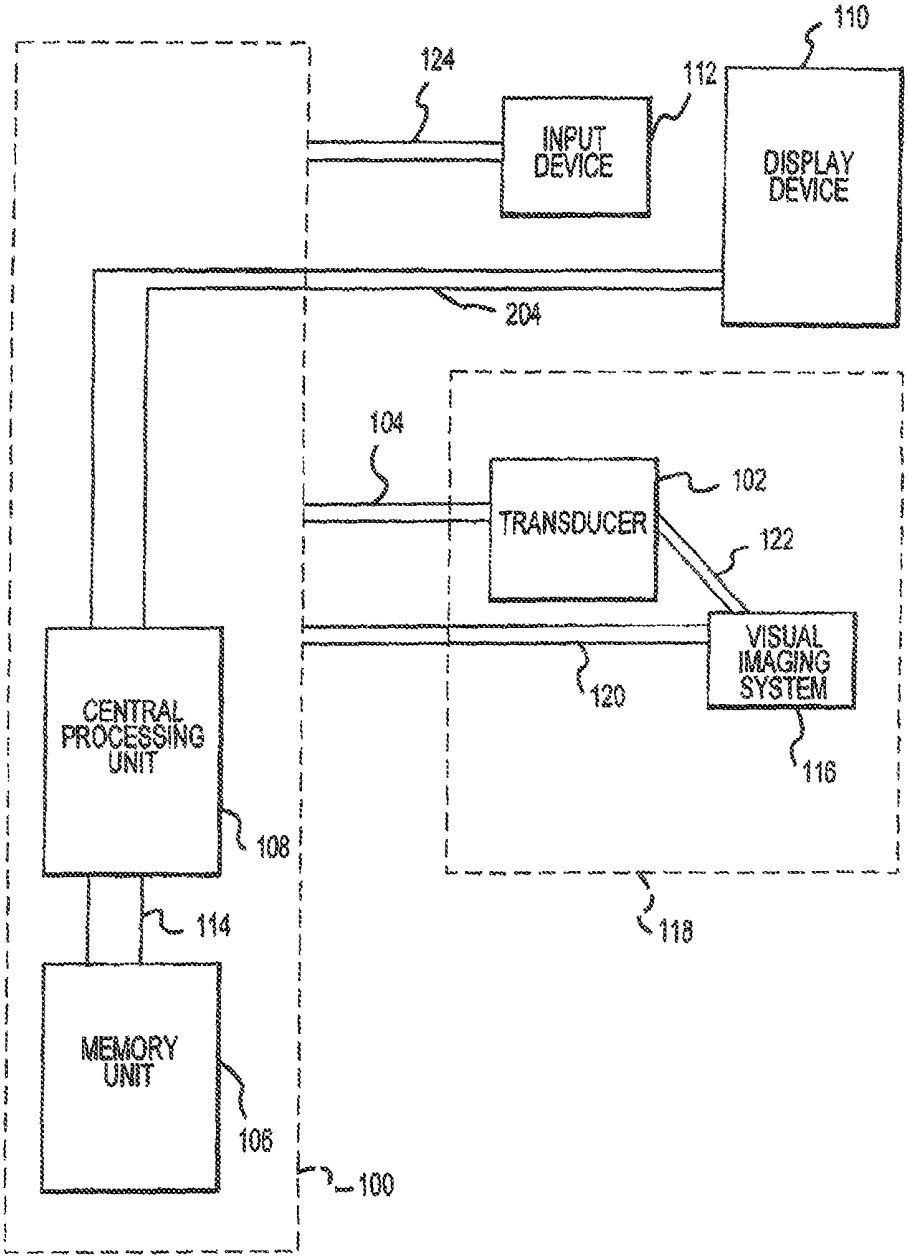
110
124
112
INPUT DEVICE
DISPLAY DEVICE
204
104
102
TRANSDUCER
122
VISUAL IMAGING SYSTEM
120
116
CENTRAL PROCESSING UNIT
108
114
118
MEMORY UNIT
106
100

FIG.2

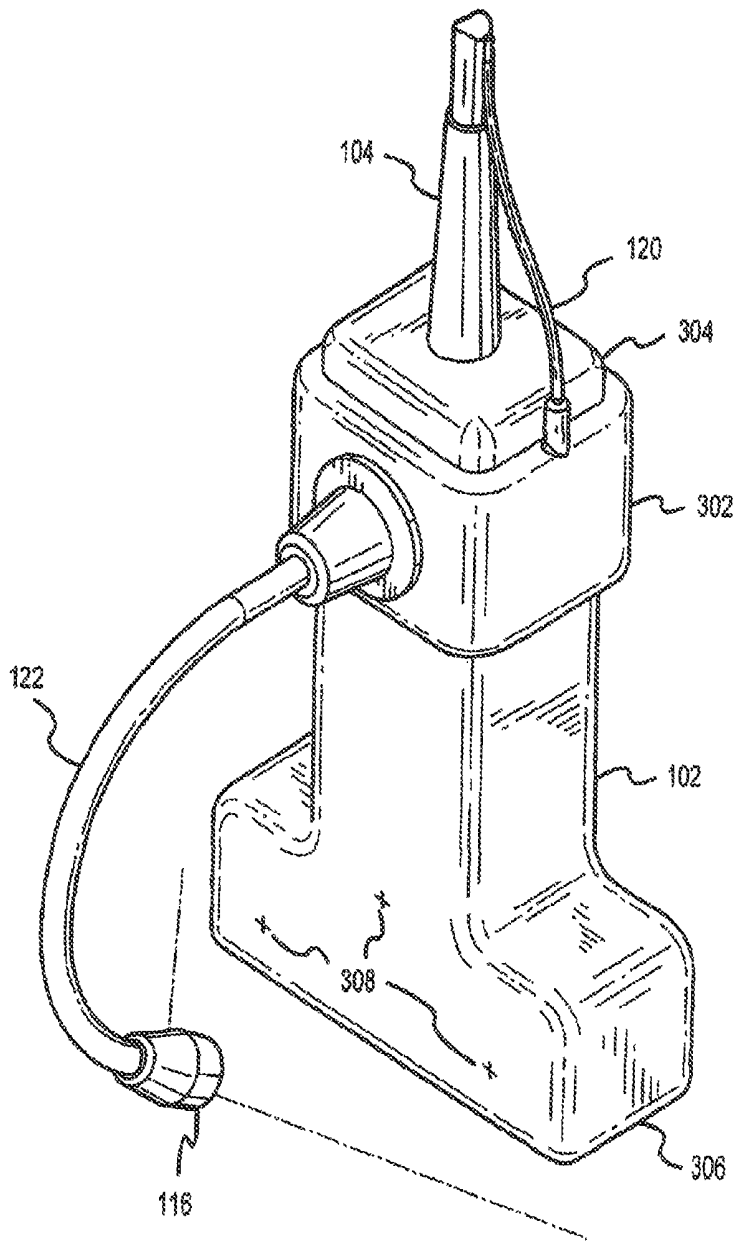

FIG.3

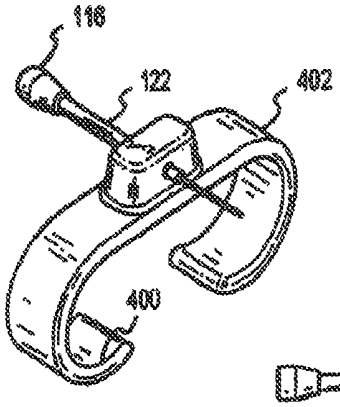

FIG.4A

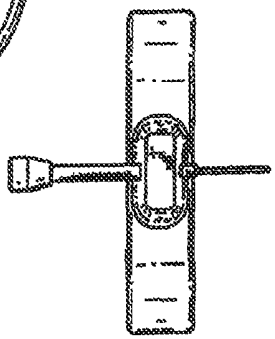

FIG.4D

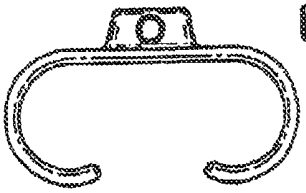

FIG.4B

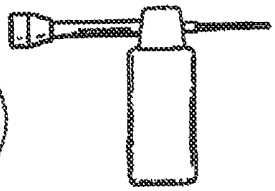

FIG.4E

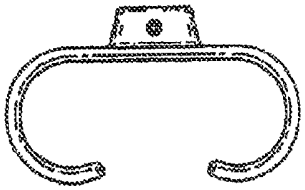

FIG.4C

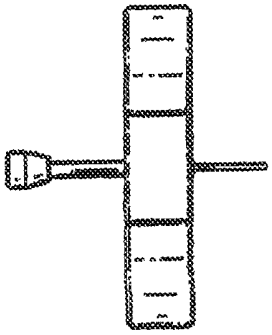

FIG.4F

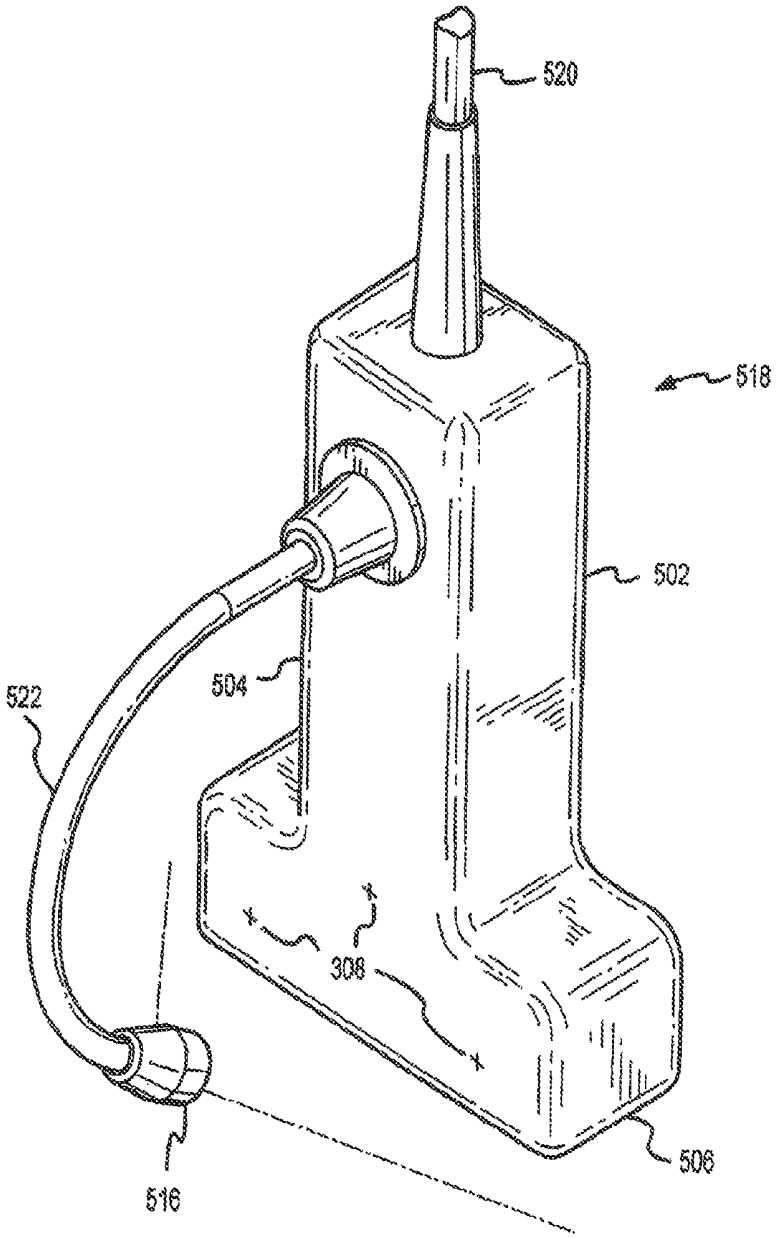

FIG.5

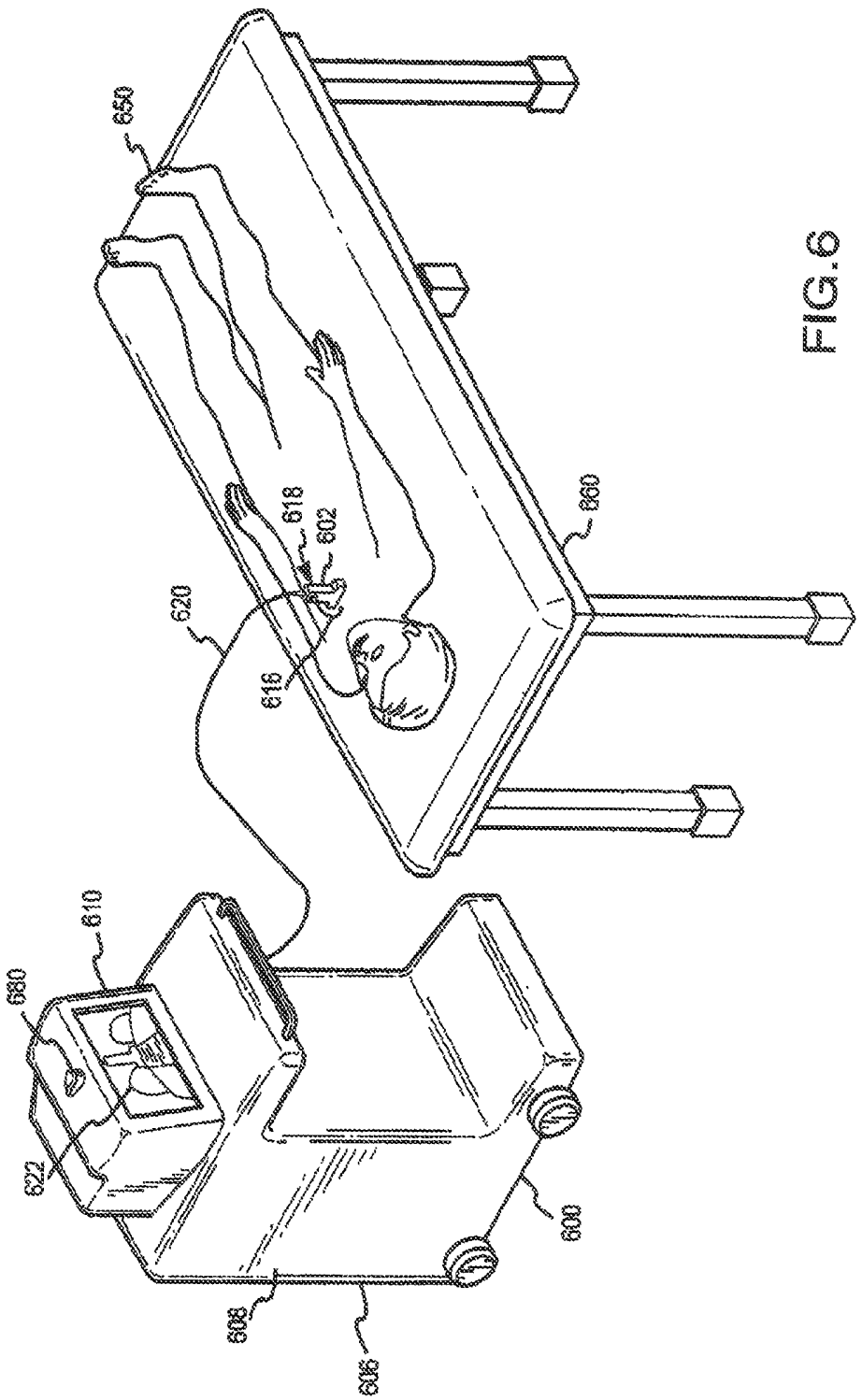

FIG.6

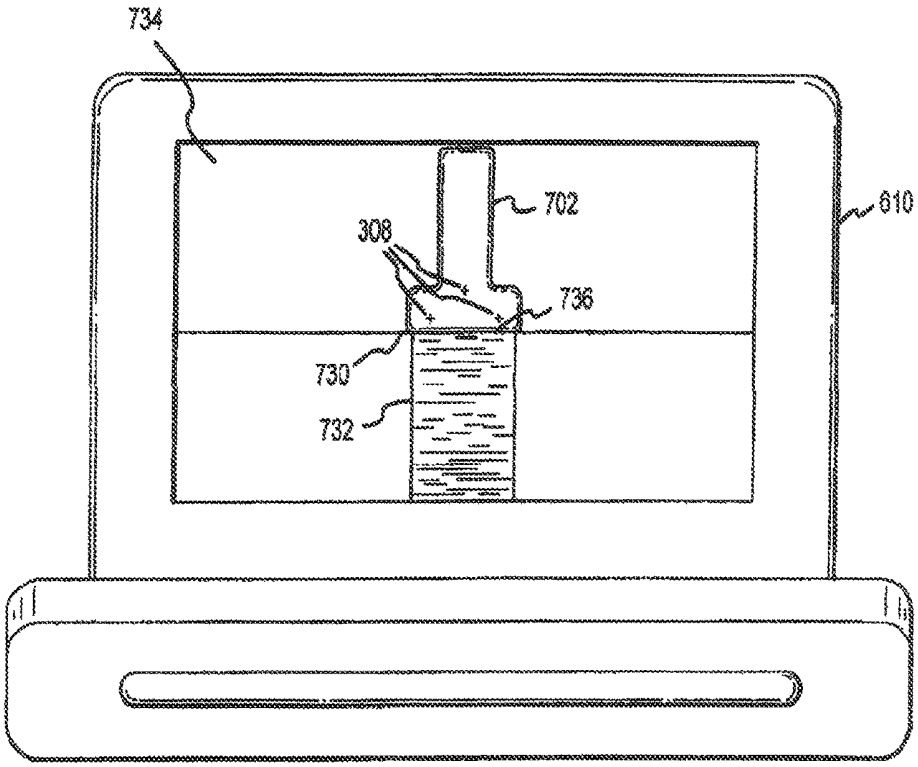

FIG.7

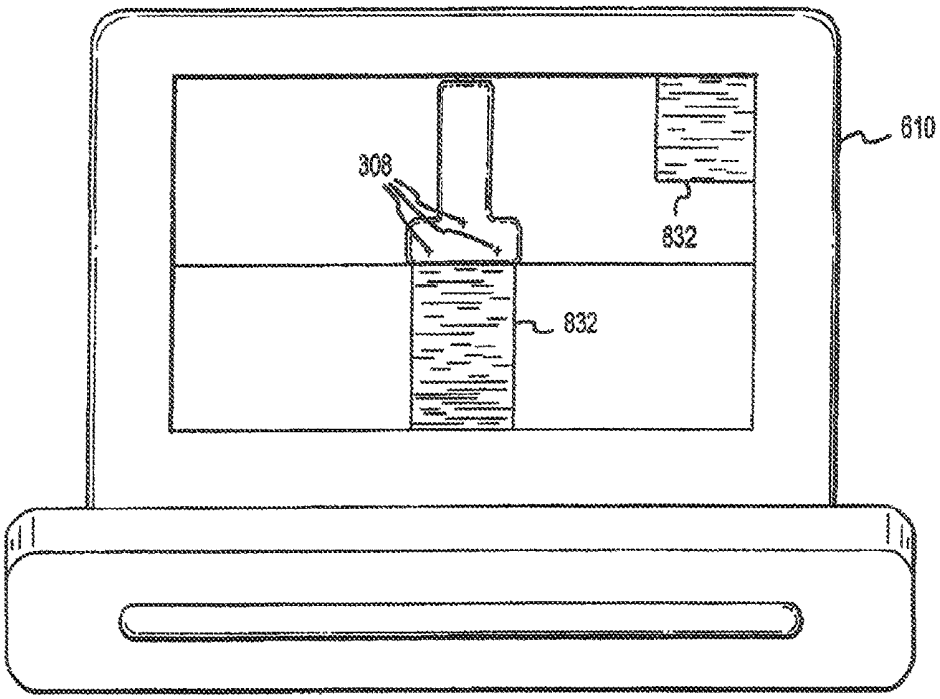

FIG.8

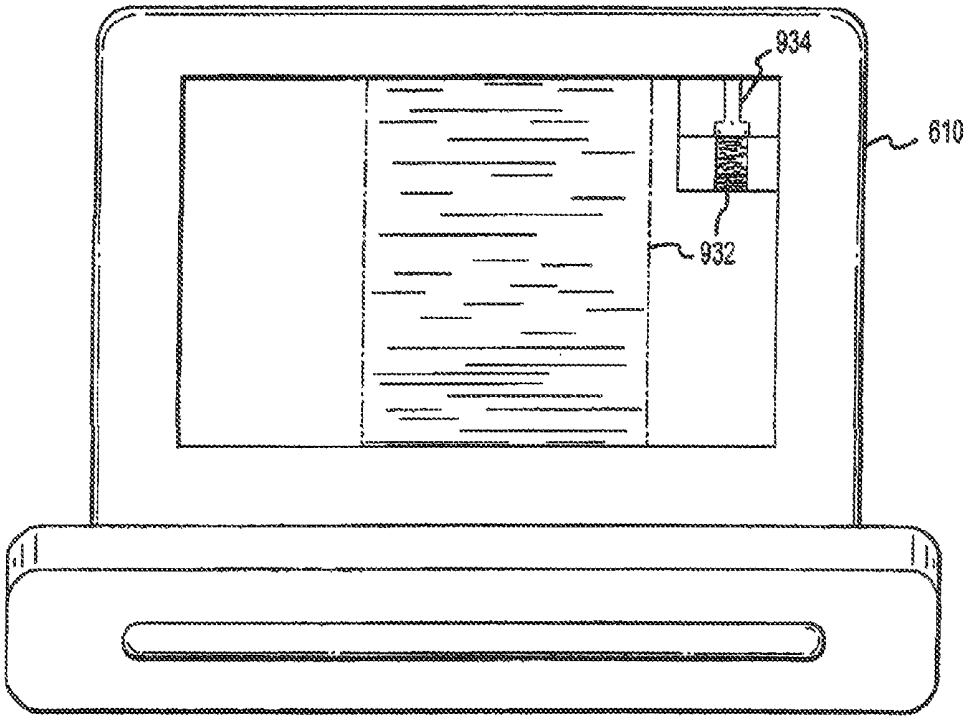

FIG.9

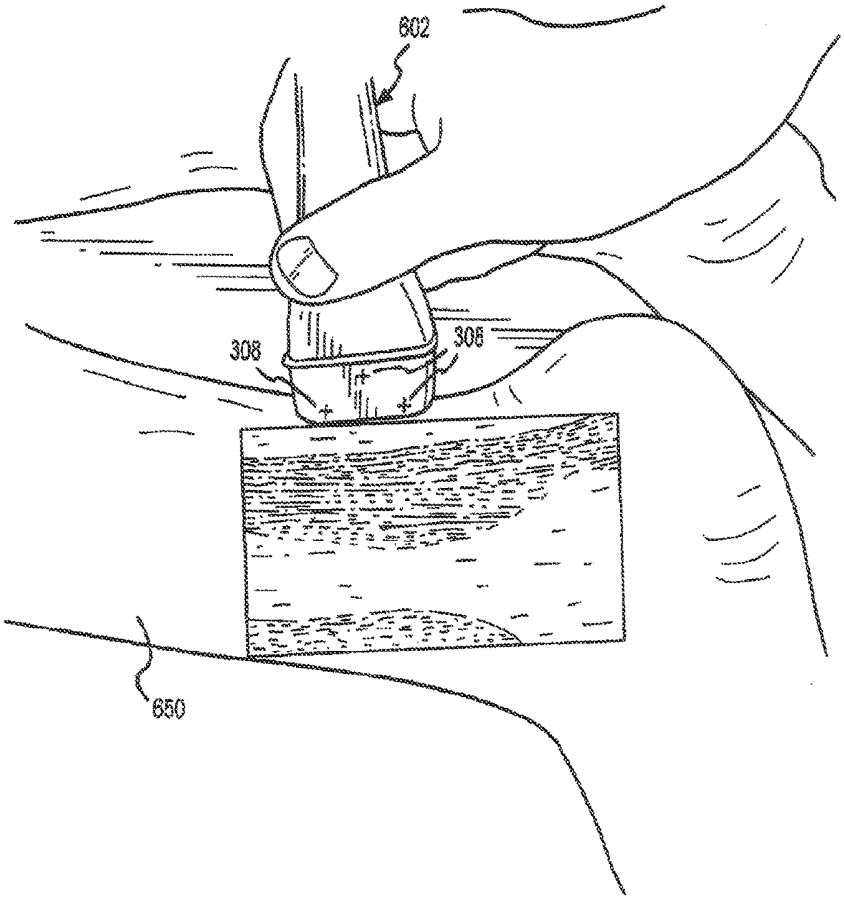

FIG.10

VISUAL IMAGING SYSTEM FOR ULTRASONIC PROBE

CROSS-REFERENCE TO RELATED APPLICATIONS

This application is a continuation of U.S. patent application Ser. No. 13/071,298, entitled "VISUAL IMAGING SYSTEM FOR ULTRASONIC PROBE," filed on Mar. 24, 2011, issued as U.S. Pat. No. 8,409,097 on Apr. 2, 2013, which is a continuation of U.S. patent application Ser. No. 11/554,272, entitled "VISUAL IMAGING SYSTEM FOR ULTRASONIC PROBE," filed on Oct. 30, 2005, issued as U.S. Pat. No. 7,914,453 on Mar. 29, 2011, which was a continuation-in-part application of U.S. patent application Ser. No. 10/358,110, entitled "VISUAL IMAGING SYSTEM FOR ULTRASONIC PROBE," filed on Feb. 4, 2003, issued as U.S. Pat. No. 7,142,905 on Nov. 28, 2006, which was a continuation application of U.S. patent application Ser. No. 09/750,816, entitled "VISUAL IMAGING SYSTEM FOR ULTRASONIC PROBE," filed on Dec. 28, 2000, issued as U.S. Pat. No. 6,540,679 on Apr. 1, 2003, both incorporated herein by reference.

FIELD OF THE INVENTION

This invention generally relates to a non-invasive ultrasonic system, and more particularly, to a system which is capable of generating ultrasonic imaging data and information related to the positioning of a transducer during medical treatment and diagnosis.

BACKGROUND OF THE INVENTION

There are a number of well-known non-invasive imaging techniques for the diagnosis and treatment of patients. These techniques generally allow a physician to obtain high fidelity views of the human anatomic structure without the advent of invasive procedures. Such imaging systems which provide a cross-sectional (tomographic) view of the human body include computer-aided tomography (CAT scans) x-ray imagers, magnetic resonance (MRI) imagers, positron emission tomographic scanning (PET), and magnetoencephotographic scanning (MEG). Typically, when a patient is scanned using one of these conventional cross-sectional imaging techniques, the patient's entire body or limb is imaged or mapped and the resulting anatomic topology is stored in an imaging database for later use.

While CAT scans, MRI's, PET's, and MEG's allow imaging of the entire body or entire limb requiring treatment, ultrasonic hand-held transducers are generally used to obtain a more localized image of a treatment area. In general, the hand-held transducer contains an imaging element which includes an ultrasonic sensor for placing in contact with the patients skin. During operation, the imaging element of the transducer sends ultrasonic waves from the transducer into the patient's body to the region of interest, and scattered waves reflected from the region of interest within the body are collected by an ultrasonic sensor within the transducer. The resulting electrical signals can then be processed to produce an image corresponding to the structure imaged by the transducer.

Many imaging systems, such as, those described above, include a feature that allows the operator to indicate the source or location of the scanned image. In particular, the operator makes use of a model pattern representing the human body. In marking the location of the recorded image, the operator places a specially configured cursor representing the image plane of the scanning device over a model pattern to illustrate the imaging plane's orientation with respect to the patient's body.

For hand-held transducers, however, any movement of the transducer's orientation with respect to the patient's body changes the orientation of the imaging plane. This change in the imaging plane thereby requires the operator to readjust the specially configured cursor with respect to the model pattern. As a consequence, if the patient's body shifts between taking images, or if the transducer must be repositioned after imaging, it is often difficult to recapture the prior image location.

Moreover, an additional problem associated with the aforementioned scanning techniques is that each imaging process is particular to a patient, and thus sensitive to the patient's position with respect to the imaging device. Therefore, each set of images has a discrete, unique orientation related to a single patient resulting from a single scanning session. Because of their unique or distinct features, images formed at different times, or from different vantage paints cannot be suitably compared on a point-by-point basis. This prevents an accurate comparison of the scanning regions from one scanning session to another, and from one patient to another. Such a comparison would be desirable in cases where the practitioner wishes to accurately compare scanned images from a healthy patient to the images of the patient undergoing the treatment, or where a practitioner wants to assess the responsiveness or improvements of a patient to a particular treatment. When such a comparison is desired, a system which enables the practitioner to place a transducer or other medical device in a prior imaging position would be tremendously beneficial.

Prior art systems for aiding or guiding the positioning of medical devices are generally cumbersome and complex. For example, U.S. Pat. No. 5,748,767 issued to Raab discloses a method for aiding a medical practitioner in the re-positioning of a surgical tool in a prior location, such as when the patient has mewed. This re-positioning of the apparatus is accomplished by providing a correlation between the coordinates of the pre-treatment image and the image acquired during the treatment procedure. In addition, Raab necessarily requires the use of an apparatus which can transpose the imaging information from the reference system of the imaging system to the reference system of the apparatus. The system disclosed in Raab provides a method to enable the surgical tool to be positioned and re-positioned in relatively the same position with an acceptable accuracy by coordinating the pre-treatment and treatment reference systems.

During operation of the Raab system, the pre-treatment and treatment coordinates are continually calculated with respect to a specially designed reference block attached to an electrogoniometer. The electrogoniometer is further used to determine the orientation of the instruments used in the treatment process. This system, however, uses a mechanical linkage for maintaining the surgical tool in a fixed relationship with the reference block. Such machinations of the probing process creates a system that is relatively cumbersome for the practitioner using a hand-held transducer.

An additional problem with existing systems is found in the difficulty with which a prior imaging plane can be recaptured for comparison purposes, a problem which becomes even more significant with the use of hand-held transducer. For example, in one therapeutic application using a hand-held transducer, the objective of the treatment is to create a very well-placed thermal gradient in the

treatment area to selectively destroy certain regions thereof. An example of this is the hypothermia technique wherein a temperature near about 43 degrees Celsius is required to be maintained in the specific treatment area, or the focused ultrasound surgery technique which has a goal of elevating the treatment area temperature to above and beyond 55 degrees Celsius. During the therapeutic treatment process, the physiological response of the target tissue is directly related to the spatial extent and temporal duration of the heating pattern. Consequently, in order to appropriately perform feedback and control of the therapeutic treatment process, it is absolutely essential to control the temperature in the target tissue so as to know whether or not the temperature in the treatment region has been raised to a level that produces a desired therapeutic effect or the destruction of the tissue. Moreover, as with the hypothermia and focused ultrasound surgery techniques, and any other technique whereby the success of the therapy must be evaluated from one treatment session to the next, it is critical to be able to accurately image the treatment area undergoing treatment for comparison to subsequent treatment sessions.

Another method for enabling a particular image to be recaptured from one session to the next may be accomplished by using a three-dimensional coordinate system that is fixed within a human anatomy. For example, U.S. Pat. No. 5,230,338 issued to Allen at al discloses a method for interactively guiding a surgical tool, wherein three or more fiducial implants are implanted in three separate, spaced locations within the human body. With the Allen method, the three fiducial implants are arranged in a non-collinear manner such that a plane is formed which defines a three dimensional coordinate system. Once the external coordinate system is established, a scan of the treatment area is performed. During subsequent scans, the patient's orientation may change relative to the imaging apparatus, but the new orientation of the patient can be measured by locating the fiducial implants to relation to the imaging apparatus. In this manner, the images of subsequent scans of a patient relating to a new position or orientation can be configured to correspond to the earlier recorded scans for comparison. A disadvantage inherent in the Allen system, however, is that the fiducial implants remain implanted in the patient between imaging session. In addition, the Allen system does not facilitate the scanning or diagnosis of other patients, but only operates effectively for the same patient.

As described above, several prior art techniques exist for monitoring and recording the position of tools used in the diagnosis and treatment of patients, or for recapturing an image scanned in a prior scanning session. Generally, these techniques are complex as in the U.S. Pat. No. 5,748,767 issued to Raab, or are limited in their use, as in U.S. Pat. No. 5,230,338 issued to Allen et al. That is, use of such techniques essentially requires the implementation of cumbersome equipment, such as an electrogoniometer and reference block, or requires that elements of the system remain with the patient between scans, such as the implants in Allen. In that regard, such methods are inadequate for medical specialist who desire a simpler and less cumbersome manner to record a tool position or orientation which correlates with a prior image, to facilitate the return to the precise location of the prior treatment in that patient or, alternatively, a second patient undergoing similar treatment.

Thus, a need exists for a less cumbersome and easy to use system capable of monitoring and recording the position of a transducer to facilitate the desired-positioning of the transducer within a treatment area.

SUMMARY OF THE INVENTION

A visual imaging system in accordance with the present invention overcomes various problems of the prior art. In accordance with various aspects of the present invention, a non-invasive visual imaging system is provided, wherein the imaging system procures an image of a transducer position during diagnostic or therapeutic treatment. The visual imaging system may comprise a laser, an LED, a photodiode, or any other light sensor or emitter devices, or any combinations thereof, for capturing visual information regarding the position of the transducer during diagnostic or therapeutic treatment. In addition, the system suitably provides for the transducer to capture patient information, such as acoustic, temperature, or ultrasonic images. For example, an ultrasonic image captured by the transducer can be correlated or otherwise fused or combined with the corresponding positional transducer image, such that the corresponding images represent not only the location of the transducer with respect to the patient, but also the ultrasonic image of the region of interest being scanned.

In accordance with another aspect of the present invention, the imaging system can comprise a positioning indicator located within the transducer which can facilitate the determination of the position and/or orientation of the transducer with respect to the patient. In addition, this positioning information can be utilized to suitably scale the ultrasonic image of the treatment region to correspond with the positional image of the patient to provide a fused image.

Further, in accordance with another aspect of the present invention, a system is provided wherein the information relating to the transducer position on a single patient may be used to capture similar imaging planes on the same patient, or with subsequent patients. This information captured may also be utilized for training poses.

BRIEF DESCRIPTION OF THE DRAWINGS

A more complete understanding of the present invention may be derived by referring to the various exemplary embodiments of the present invention which are described in conjunction with the appended drawing figures in which like numerals denote like elements, and in which;

FIG. **1** illustrates a block diagram of an exemplary embodiment in accordance with the present invention;

FIG. **2** illustrates a block diagram of another exemplary embodiment in accordance with the present invention;

FIG. **3** illustrates an exemplary embodiment of a probe assembly in accordance with the present invention;

FIGS. **4**A-**4**F illustrate an exemplary embodiment of an attachment device in accordance with the present invention;

FIG. **5** illustrates another exemplary embodiment of a probe assembly in accordance with the present invention;

FIG. **6** illustrates an exemplary embodiment of the visual imaging system in operation in accordance with the present invention;

FIG. **7** illustrates an exemplary combined image capable of being shown on the display screen in accordance with the present invention;

FIG. **8** illustrates another exemplary combined image capable of being shown on the display screen in accordance with the present invention;

FIG. **9** illustrates yet another exemplary combined image capable of being shown on the display screen in accordance with the present invention; and

FIG. **10** illustrates an exemplary embodiment of the visual imaging system in operation as may be displayed in accordance with the present invention.

DETAILED DESCRIPTION OF VARIOUS EXEMPLARY EMBODIMENTS

The present invention may be described herein in terms of various components and processing steps. It should be appreciated that such components and steps may be realized by any number of hardware components configured to perform the specified functions. For example, the present invention may employ various medical treatment devices, visual imaging and display devices, input terminals and the like, which may carry out a variety of functions under the control of one or more control systems or other control devices. In addition, those skilled in the art will appreciate that the present invention may be practiced in any number of medical contexts and that the exemplary embodiment relating to an ultrasonic transducer as described herein is merely one exemplary application for the invention. For example, the principles, features and methods discussed may be applied to any medical application. Further, various aspects of the present invention may be suitably applied to other industrial, manufacturing or engineering applications, such as the inspection of materials such as steel, plastics, concrete or wood.

In accordance with one aspect of the present invention, a medical treatment and diagnosis system comprises a visual imaging system suitably configured with a probe assembly to facilitate the accurate and consistent placement of the probe assembly during treatment and diagnosis of a patient. The probe system can be suitably configured to perform any of various functions, such as the obtaining of information relating to a region of interest of the patient, and/or the providing of therapeutic treatment of the region of interest. In addition, the probe system can comprise various medical devices, such as transducers for imaging, heating or temperature measurement, audio devices, or any other device for obtaining patient information.

The visual imaging system is suitably configured to provide information relating to the position of the probe system with respect to the patient, or the region of interest. This information can include various forms, such as, for example, video or photographic images, or graphical representations, relating to the position of the probe system during operation. Moreover, the visual imaging system can comprise various components, such as video or other like imaging devices. In addition, the visual imaging can be configured directly within, or connected to, the probe system facilitate the identification of the positional information of the probe system during its use.

In accordance with another aspect of the present invention, the visual imaging system is suitably configured to provide information relating to the position of the probe system to a control system for further assessment and recommendations. In accordance with this aspect, the control system is configured to receive imaging information from the visual imaging system and patient information from the probe system and suitably correlate both components of information to provide various advantages to the medical practitioner. For example, the control system can provide information which facilitates the positioning of the probe system during use. This information could be a reference position of the probe system from a prior use of the probe with a particular patient, or from other patients. In addition, the control system could provide information directing the probe system to a specific position of the patient to observe or treat a particular region of interest for that patient. Further, this imaging information can be suitably utilized for the training of medical practitioners.

To further explain in more detail various aspects of the present invention, exemplary embodiments of a visual imaging system as used with a control system and an ultrasonic probe system will be provided. However, it should be noted that the following exemplary embodiments are for illustrative purposes, and that the present invention can comprise various other configurations for a medical treatment and diagnostic system. In addition, although not illustrated in the drawing figures, the medical treatment and diagnostic system can further include components associated with a therapy or diagnostic system, such as any required power sources, system control electronics or additional memory locations.

With reference to FIG. **1**, an exemplary embodiment of a medical treatment and diagnostic system in accordance with the present invention is shown. In accordance with this embodiment, the system comprises a probe assembly **118** and a control system **100**. Probe assembly **118** suitably comprises a transducer **102** for rendering localized diagnosis and treatment of patients and a visual imaging system **116** far transmitting information to control system **100** relating to the position and/or orientation of transducer **102** with respect to the patient. Transducer **102** may comprise any conventional type of transducer used by practitioners in the diagnosis or treatment of patients. Preferably, transducer **102** comprises an ultrasonic transducer configured to provide various features. For example, transducer **102** can include a visual imaging element capable of imaging a patient's treatment region. Transducer **102** can also be configured for recording or measuring acoustic or temperature data and for transmitting the acoustic or temperature data to the control unit **100** via communications channel **104**. Further, transducer **102** can be suitably configured to providing therapeutic treatment to the region of interest. In accordance with an exemplary embodiment, transducer **102** can comprise a combined imaging, therapy, and temperature measurement transducer, as disclosed more fully in U.S. Pat. No. 6,050,943, entitled IMAGING THERAPY AND TEMPERATURE MONITORING ULTRASONIC SYSTEM and issued on Apr. 18, 2000, as well as a three-dimensional ultrasonic image as disclosed more fully in U.S. patent application Ser. No. 09/502,174, now U.S. Pat. No. 6,500,121, entitled IMAGING, THERAPY AND TEMPERATURE MONITORING ULTRASONIC SYSTEM, both hereby incorporated herein by reference.

Visual imaging system **116** may comprise any conventional device capable of capturing visual information relating to the position and/or orientation of transducer **102** and for transmitting the information to control device **100**, via such as signal cable **120**. For example, imaging system **116** can comprise a video camera for capturing real-time or substantially-real-time visual information. Visual imaging system **116** can also comprise a photographic camera for providing still-photos representative of the position and/or orientation of transducer **102**. In other embodiments, the visual imaging system **116** may comprise one of a laser, an LED, a photodiode, or any other light sensor or emitter devices, or any combinations of such lasers, LEDs, photodiodes, or any other light sensor or emitter devices, for capturing visual information.

In addition, visual imaging system **116** can be suitably connected to transducer **102** to follow the movement of transducer **102** during operation. As a result, a transducer **102** moves about the patient, visual imaging system **116** can suitably follow along in real-time. This connection can be facilitated by various devices and in various manners. In addition, visual imaging system **116** can be permanently or removeably attached to transducer **102**. Further, the position and/or orientation of visual imaging system **116** with respect to transducer **102** can be suitably configured in various manners, as will be described in more detail below. As a result, the positional and/or orientation information of transducer **102** can be correlated with any imaging, acoustic or temperature measurements obtained by transducer **102**.

Control system **100** is configured to control the operation of probe assembly **118**, including the receiving of information from probe assembly, such as from transducer **102** and imaging system **116**. In addition, control system **100** can be configured to process the information collected from transducer **102** and imaging system **116**. From this processed information, control system **100** can provide various types of information to the medical practitioner.

For example, control system **100** can indicate to the practitioner a desired position and/or orientation of transducer **102** based on the prior use of probe assembly **118** with the present patient being observed. In addition, control system **100** can also provide information based on use of probe assembly **118** for other patients. Moreover, control system **100** can include a historical database of previous applications of probe assembly **118**. This database can provide position and/or orientation information for a particular region of interest, and can be utilized for further review and diagnosis of the patient, as well as being used for training of medical practitioners.

Control system **100** can comprise various hardware configurations. In accordance with an exemplary embodiment, control system **100** comprises a memory unit **106**, a central processing unit **108**, and a display device **110**. The memory unit **106** of control system **100** may be of any conventional type capable of storing a plurality of data and software programs, including video, audio, numerical or statistical data. Memory unit **106** is suitably configured to provide memory locations for storing various items of data to be directly or indirectly input to, or directly or indirectly output from, control system **100**. Memory unit **106** can also comprise a conventional database for the storage of a plurality of data and software programs, including video, audio, numerical or statistical data. For example, video streaming of the positional imaging information and ultrasonic imaging information of transducer **102** during operation may be suitably stored, such as a segment of a couple seconds, minutes or longer, or even still segments of information.

Memory unit **106** can be connected to central processing unit **108** in any conventional manner, such as, for example, through a bus **114**. Central processing unit **108** is configured for receiving and decoding incoming instructions, executing commands, and manipulating data stored in memory unit **106**. Central processing unit **108** may also be configured to receive instructions from an input device **112**, such as any conventional type keyboard, for example, a touch-type or touch entry keyboard. The instructions from the input device **112** may further require the central processing unit **108** to retrieve data or software programs stored in memory unit **106**. Central processing unit **108** is further capable of executing computer software programs and sending the processed information to display device **110**.

Central processing unit **108** may comprise various software algorithms configured for correlating, fusing or otherwise combining acoustic, thermal, or ultrasonic imaging information from transducer **102** with the positional and/or orientation information from imaging device **116**. For example, in accordance with an exemplary embodiment, and with momentary reference to FIGS. **7-10**, the software algorithms can be configured to provide a combined image wherein the positional image of transducer **102** can be suitably displayed with the ultrasonic image of the patient to provide a "fused" image. In addition, such a fused or combined image can be suitably scaled to as to appear to provide a cross-sectional view of the patient and treatment region during operation of transducer **102**.

Display device **110** suitably comprises any display for providing at least one of video, audio, graphical data or images. Display device **110** may be a component of control system **100**, or display device **110** may be a separate device from control system **100**, for example as is depicted in FIG. **2**. Where display device **110** is apart from control system **100** as in FIG. **2**, display device **110** can be connected to the control system **100** via communications channel **204**. Further, display device **110** may also be of any conventional type capable of displaying data input through input device **112**, stored in memory unit **106**, or processed through processing unit **108**. For example, display device **110** is capable of displaying video and ultrasonic images in simultaneous or singular fashion, for example, a fused image or separate images of the position of transducer **102** and the ultrasonic image of the patient.

Referring now to FIG. **3**, an exemplary embodiment of probe assembly **118** is illustrated. In accordance with this embodiment, transducer **102** further includes a transducer imaging element **306** encased within a transducer housing **304**. Transducer imaging element suitably comprises a ultrasonic transducer element configured for sending ultrasonic signals to a region of interest and then suitably receiving signals to provide an ultrasonic image of the region of interest.

Visual imaging device **116**, such as a video camera, can be suitably attached or connected to transducer **102** by various manners. For example, to connect imaging device **116** and transducer **102**, an arm member **122** can be provided. Arm member **122** may be any configuration of attachment structure, and may comprise various materials, for example, plastics, metals or other like materials. In accordance with one embodiment, arm member **122** is adjustable. In this embodiment, arm member **122** can be suitably configured for moving with relative freedom to enable imaging device **116** to be suitably stationed in various positions with respect to transducer **102**, i.e., the arm member can position imaging device **116** in various fixed positions with respect to transducer **102** to provide multiple views of transducer **102** with respect to the patient. For example, arm member can comprise a section of flexible conduit, such as that utilized in various adjustable lighting systems. Thus arm member **122** can be suitably positioned, and/or re-positioned as desired by the medical practitioner. However, arm member **122** can also comprise a rigid or substantially rigid member configured to maintain a more permanent position of imaging device **116** relative to transducer **102**. Accordingly, arm member **122** suitably facilitates the procurement of images relating to the position of the transducer **102** from imaging device **116** by providing a fixed position of imaging device **116** with respect to transducer **102** during operation.

Arm member **122**, and thus visual imaging system **116** can be suitably attached or connected to transducer **102** in

various manners. For example, transducer **102** can suitably include an attachment device **302**. Attachment device **302** can be permanently or removeably affixed to transducer **102** such that when affixed, attachment device **302** is in continuous contact with the transducer housing **304** In addition, attachment device **302** can provide for the fixed connection of arm member **122** to transducer **102**. Attachment device **302** can also comprise any material, for example, plastics, metals, wood and the like, and any configuration, for example, clamps, clips, clasps and the like, for facilitating connection or attachment of arm member **122** to transducer **102**.

With momentary reference to FIGS. **4**A through **4**F, various perspective, top, bottom and side views of an exemplary attachment device **302** are illustrated. In this embodiment, the attachment device **302** comprises a clip **402**. As shown, clip **402** is suitably designed as to be capable of being securely attached to transducer housing **304**. In addition, the inner contour **400** of clip **402** is preferably shaped to the outer contour of transducer housing **304** such that once clip **402** is firmly attached to transducer housing **304**, the position of clip **402**, relative to transducer housing **304**, is substantially fixed. As a result of attachment device **302** and arm member **122**, the visual image transmitted by imaging device **116** can follow in a direct correlation to the movement and position of transducer **102**.

Although FIG. **4** depicts a clip **402** wherein the clip is formed to fit securely and immobile to a transducer housing, it should be noted that clip **402** is not so limited. That is, imaging device **116** and arm member **122** may be affixed to the transducer housing **304** using any conventional mechanism which ensures that once arm member **122** is held substantially rigid or fixed, then the spatial relationship between imaging device **116** and transducer **102** remains substantially fixed. Accordingly, attachment device **302** may comprise any assembly or arrangement such that the attached components are rendered relatively fixed with respect to one another.

Although an attachment device **302** can facilitate attachment of arm member **122** to transducer **102**, other methods and devices for connecting the components together can be utilized. For example, arm member **122** and transducer **304** can be suitably configured for integration of arm member **122** directly into transducer **102**. With reference to FIG. **5**, another exemplary embodiment of probe assembly **118** is illustrated. In accordance with this embodiment, a transducer **502**, including a transducer housing **504** and transducer imaging element **506** are provided. In addition, an arm member **522** is suitably integrated into transducer housing **504**. Further, this exemplary embodiment of the probe assembly **118** includes imaging device **516** attached to transducer **502** via arm member **522**. It should be noted that transducer **502**, imaging device **516** and arm member **522** are similar in characteristics and operation to transducer **102**, visual imaging device **116** and arm member **122** described above. In addition, probe assembly **118** includes a transducer cable **520** which is capable of transmitting data from transducer sensor **506** and visual images from imaging device **516** to control unit **100**.

In accordance with another aspect of the present invention, probe assembly **108** may be configured to provide a fused image for display which is representative of the combining of the position and/or orientation information of transducer **102** and the ultrasonic imaging information of the treatment region. This fusing of images can be suitably provided by software algorithms within control system **100**. While this fusing of images can be readily provided once the orientation and position of transducer **102** is known, once transducer **102** is moved or tilted such that the angle of scan or the geometry of transducer **102** with respect to the patient changes, the scaling of the ultrasonic imaging information needs to be reconfigured.

To further facilitate the providing of a fused image which represents an image similar to a cross-sectional view of transducer **102** and patient, for example, as illustrated in FIGS. **7-10**, transducer **102** can be configured with a positioning indicator. With reference to FIG. **3**, an exemplary positioning indicator **308** is illustrated.

In accordance with this exemplary embodiment, positioning indicator **308** comprises a series of marks which are suitably configured to facilitate the determination and assessment of the positional and/or orientation information of transducer **102** with respect to the patient. Positioning indicator **308** is suitably configured to permit control system **100** to suitably correlate the geometry, i.e., position and orientation, of transducer **102** to the geometry of a corresponding ultrasonic image of the treatment region. For example, positioning indicator **308** can comprise triangulation marks, i.e., three marks configured in a triangular manner, configured at known distances apart to permit the software algorithm of central processing unit **108** to assess and determine the orientation and geometry of transducer **102** during operation.

For example, transducer **102** can include three cross-like triangulation marks, 1 mm in length, separated by fixed distances, e.g., 3 to 10 mm or more apart, that can provide the software with a reference point for the orientation of transducer **102**. In addition, by knowing the fixed distances of the triangulation marks, the software within central processing unit **108** can determine the position and distance of imaging device **116** with respect to transducer **102**. Thus, as transducer **102** changes the angle of scan or otherwise the orientation with respect to the region of interest, the software within central processing unit **108** can suitably follow these changes in orientation and position. Accordingly, by knowing the orientation and geometry of transducer **102** with respect to the patient, positional and/or orientation information and ultrasonic imaging information can be suitably fused into a combined image. In addition, the respective positional and/or orientation information and ultrasonic imaging information can be suitably scaled by the software algorithm to provide an image similar to a cross-sectional view of transducer and treatment region, such as is illustrated in FIG. **10**.

While an exemplary embodiment of a positioning indicator can comprise a series of marks **308**, such as two, three, four or more, or a single mark, positioning indicator **308** can comprise any mechanism for facilitating the determination of the geometry of transducer **102** with respect to the patient. Thus, the positioning indicator can also comprise any three-dimensional positioning indicator devices that can provide information regarding the position of transducer **102** with respect to the patient. For example, the positioning indicator can comprise an electromagnet; device configured within transducer **102** that can be suitably tracked electromagnetic sensors configured with control system **100**. In addition, the positioning indicator can comprise a gravitational accelerometer configured to provide the assessment of three axis or rotation of transducer **102** in three dimensions. Such a collection of three-dimensional information could also be suitably correlated with three-dimensional imaging information, as disclosed more fully in U.S. patent application Ser. No. 09/502,174, now U.S. Pat. No. 6,500,121, entitled

IMAGING, THERAPY AND TEMPERATURE MONITORING ULTRASONIC SYSTEM, hereby incorporated herein by reference.

Having described various aspects and features of a probe assembly and control system, the operation of an exemplary embodiment of the present invention will now be described. With respect to the following description, the operation of ultrasonic transducers will not be described in great detail. Although the present embodiment will be described with respect to the use of an ultrasonic transducer, it is to be understood that the present invention is not so limited. For example, the present invention may be used with any extra-corporeal probe or transducer used in the diagnosis or treatment of patients, such as general radiology, OB/GYN, breast, musculoskeletal, and other imaging or treatment applications.

With reference to FIG. **6**, an exemplary embodiment of the present invention during operation is illustrated. In accordance with this embodiment, a patient **650** is illustrated lying on a treatment table **660** while undergoing treatment or diagnosis in accordance with the present invention. The medical treatment and diagnosis system includes a control system **600** and a display device **610**, wherein both the control system **600** and the display unit **610** comprise characteristics to the like elements of FIGS. **1** and **2**. Further, a probe assembly **618** is included for providing imaging and treatment features, such as the probe assembly described in more detail above.

During operation, the medical practitioner, not shown, can manually image a treatment area of patient **650** by scanning the patient with probe assembly **618**. Transducer **602** of probe assembly **618** images the treatment area and sends an ultrasonic image to the control system **600** via data cable **620**. Meanwhile, visual imaging device **616**, such as a video camera, of probe assembly **618** captures a visual image of the position and/or orientation of transducer **602** with respect to the patient treatment area, and transmits the visual image to the control system **600**, also via data cable **620**. The treatment area comprises the region of interest that the practitioner has determined the scanning will occur using the transducer **602**.

Once the control system **600** receives the visual position and/or orientation images from imaging device **616** and the transducer image from transducer **602**, the processing unit **608** suitably processes the images for further display and use. In addition, the images can be suitably transmitted to memory unit **606** for storage and later reference, for example, for training purposes or for use later with the same patient or other patients. During processing of the images by processing unit **608**, the visual and transducer images can be suitably correlated into a combined image such that the resulting combined image comprises both the ultrasonic, acoustic and/or thermal treatment image information captured by the transducer **602** during operation and the positional image depicting the position and/or orientation of the transducer **602** on the surface of the treatment area at the time the transducer image is captured. Once the visual and transducer images are processed by central processing unit **608**, such as by a suitable algorithm, the respective visual and transducer images, and/or the combined image, i.e., the fused image, can be sent to memory unit **606** for storage and later reference. In addition, the respective images and/or the combined image can be further transmitted to the display device **610** for interpretation by the medical practitioner.

In accordance with another exemplary embodiment, the medical treatment and diagnosis system can include other visual imaging devices for capturing information regarding the position and/or orientation of the patient and the transducer. For example, other imaging devices or cameras can be located with the system, such as a probe assembly having two or more arm members suitably connected to two or more visual imaging devices. This configuration could provide different views of the position and/or orientation of the transducer, or even a three dimensional view if desired. In addition, additional imaging devices could be included from within or proximate the control system or display, such as an additional visual imaging device **680**. Moreover, other systems for determining the position of a medical instrument, such as the triangulation methods described above, can be combined with the probe assembly of the present invention.

The positional and/or orientation image and the transducer image can be configured in various manners. For example, display **610** can be configured to display each image separately, for example, on an individual screen basis, or on the same screen, such as a split screen or a "picture-in-picture" concept as is utilized on various television or computer monitors. In addition, in accordance with an exemplary embodiment, the images can be configured in a combined image which facilitates the analysis and assessment of the image information during or after operation.

With reference to FIG. **7**, and with continued reference to FIG. **6**, a combined image in accordance with an exemplary embodiment is illustrated. In this embodiment, display device **610** suitably displays a combined image comprising a positional image **734**, representative of the position and/or orientation of transducer **602**, and a transducer image **732**, such as the ultrasonic images of the treatment region received and processed by the central processing unit **608**. In addition, the respective images can be suitably combined into a single image. For example, the single image can include positional rage **734** with an inlay of transducer image **732**, i.e., positional image **734** and transducer image **732** are suitably fused into a combined image which is representative of transducer **602** while in contact with the treatment area **736**. In other words, the combined image can show the region of interest that is imaged under the patient's skin as represented by the transducer image **732**, in correlation with the position and/or orientation of transducer **602** in contact with the patient's skin, as represented by positional image **734**. As a result, a medical practitioner can view the combined image as if a cross-sectional view of the treatment region is available for assessment, i.e., the combined image is similar to a cross-sectional view of the patient and the treatment region. For example, with reference to FIG. **10**, as transducer **602** is obtaining an ultrasonic image of a patient's heel, leg or foot **650**, a combined image displaying the position and orientation of transducer fused together with a suitably scaled ultrasonic image of patient **650** is provided. Moreover, as transducer **602** is moved about the patient, the combined image can be suitably scaled on a real-time basis by software algorithms within control system **600**, such as described above. As will be discussed below, such a combined image provides various advantages.

As illustrated in FIG. **8** and FIG. **9**, in accordance with the present invention, control system **600** is also capable of generating various other combined image configurations, such as, split-screen images or "picture-in-picture" images. For example, FIG. **8** illustrates a combined image wherein the combined image comprises the primary image and includes an additional inlay of the transducer image **832** comprising a secondary image. Further, with reference to FIG. **9**, a combined image is illustrated that includes the transducer image **932** being central to the display device **912** screen as a primary image, and a secondary image being

included wherein the secondary image represents the combined transducer image **932** and positional image **934** as the secondary image. It should be noted that other variations of the images, including different sizes, locations or types, such as two-dimensional or three-dimensional images, can be suitably displayed in accordance with various other embodiments of the present invention.

As a result of the imaging information provided, medical practitioners can utilize the information to facilitate the treatment and diagnosis of their patients. In addition, the information can be utilized in various manners. For example, as the medical treatment and diagnosis system is utilized and imaging information is being observed, a medical practitioner can obtain a real-time assessment of the correlation between the position and/or orientation of the transducer and the imaging, temperature or therapeutic effects provided by the transducer for the treatment region. Accordingly, the medical practitioner can utilize the system to guide the transducer to desirable positions on the patient's surface to obtain the desired treatment or imaging information.

In addition, as the information is received, the control system can suitably store the imaging information in a database for later use and retrieval. For example, it is often difficult when treating patients on subsequent visits to repeat the ultrasonic treatment, imaging, or measurements obtained from prior visits. However, through use of the medical treatment and diagnosis system of the present invention, medical practitioners can realize repeatability and consistency in their treatment of previous patients.

Moreover, the information captured and stored by the control system can also be utilized as a guidance tool with respect to new or different patients. For example, if a particular position on a patient, for example, a fixed distance from a patient reference point, yields favorable or desired results, medical practitioners can utilize the system to suitably re-position the transducer to the ideal or desired position for obtaining similar results. Further, the system can be utilized to train medical practitioners as to the most suitable positions for the transducer depending on the medical operation to be performed. For example, a video stream demonstrating 10 to 15 seconds of operation of a transducer through display of a combined image can demonstrate appropriate techniques for scanning of a treatment region.

In addition to storing the information, the control system can also be configured to process the information, such as through various algorithms and the like, to further improve the treatment process. For example, various artificial intelligence and other system learning functions can be implemented to provide an ever-improving system for facilitating treatment of patients.

The present invention has been described above with reference to various exemplary embodiments. However, those skilled in the art will recognize that changes and modifications may be made to the exemplary embodiments without departing from the scope of the present invention. For example, the various operational steps, as well as the components for carrying out the operational steps, may be implemented in alternate ways depending upon the particular application or in consideration of any number of cost functions associated with the operation of the system, e.g., various of the steps may be deleted, modified, or combined with other steps. Further, it should be noted that while the visual imaging system is described above is suitably for use by a medical practitioner proximate the patient, the system can also be accessed remotely, i.e., the medical practitioner can view through a remote display having imaging information transmitted in various manners of communication, such as by satellite/wireless or by wired connections such as IP or digital cable networks and the like, and can direct a local practitioner as to the suitably placement for the transducer. These and other changes or modifications are intended to be included within the scope of the present invention, as et forth in the following claims.

We claim:

1. A non-invasive treatment and imaging system comprising:

a hand-held probe assembly comprising a transducer operable to obtain patient information and to provide treatment to a patient, the hand-held probe assembly comprising an external surface;

an imaging device attached to the hand-held probe assembly to track movement of the transducer, the imaging device operable to capture positional and/or orientation information of the transducer with respect to a surface on the patient;

a rigid member attaching the imaging device to the external surface of the hand-held probe assembly, the rigid member configured to position the imaging device at a fixed distance from the transducer during the capturing of the positional and/or orientation information of the transducer; and

a control system in communication with the transducer and the imaging device, the control system configured to receive corresponding patient information and positional and/or orientation information of the transducer, the control system further configured to correlate, fuse, and/or combine the corresponding patient information and positional and/or orientation information of the transducer.

2. The non-invasive treatment and imaging system of claim **1**, the external surface of the probe assembly further comprising a positioning indicator.

3. The non-invasive treatment and imaging system of claim **1**, wherein the imaging device is a visual imaging device.

4. The non-invasive treatment and imaging system of claim **3**, wherein the visual imaging device is a video camera.

5. The non-invasive treatment and imaging system of claim **1**, wherein the transducer is an ultrasound transducer.

6. The non-invasive treatment and imaging system of claim **1**, wherein the transducer is a combined ultrasound imaging, therapy, and temperature monitoring transducer.

7. The non-invasive treatment and imaging system of claim **5**, wherein the patient information is an ultrasound image.

8. The non-invasive treatment and imaging system of claim **1**, the external surface of the hand-held probe assembly comprising a series of marks.

9. The non-invasive treatment and imaging system of claim **8**, wherein the series of marks facilitates scaling of images by the control system, the images acquired by the imaging device during changes in position of the transducer.

10. The non-invasive treatment and imaging system of claim **8**, wherein the series of marks comprises triangulation marks.

11. The non-invasive treatment and imaging system of claim **1**, the external surface of the handheld probe assembly comprising an electromagnetic device.

12. The non-invasive treatment and imaging system of claim **11**, wherein the electromagnetic device facilitates

scaling of images by the control system, the images acquired by the imaging device during changes in position of the transducer.

13. The non-invasive treatment and imaging system of claim **1**, the handheld probe assembly comprising an accelerometer.

14. The non-invasive treatment and imaging system of claim **13**, wherein the accelerometer facilitates scaling of images by the control system, the images acquired by the imaging device during changes in position of the transducer.

* * * * *

专利名称(译)	超声探头视觉成像系统		
公开(公告)号	US9907535	公开(公告)日	2018-03-06
申请号	US13/854936	申请日	2013-04-01
[标]申请(专利权)人(译)	ARDENT SOUND		
申请(专利权)人(译)	ARDENT SOUND，INC.		
当前申请(专利权)人(译)	ARDENT SOUND，INC.		
[标]发明人	BARTHE PETER G SLAYTON MICHAEL H		
发明人	BARTHE, PETER G SLAYTON, MICHAEL H		
IPC分类号	A61B8/00		
CPC分类号	A61B8/4263 A61B8/00 A61B8/463 A61B8/4245 A61B8/4427 A61B8/42		
其他公开文献	US20130231567A1		
外部链接	Espacenet USPTO		

摘要(译)
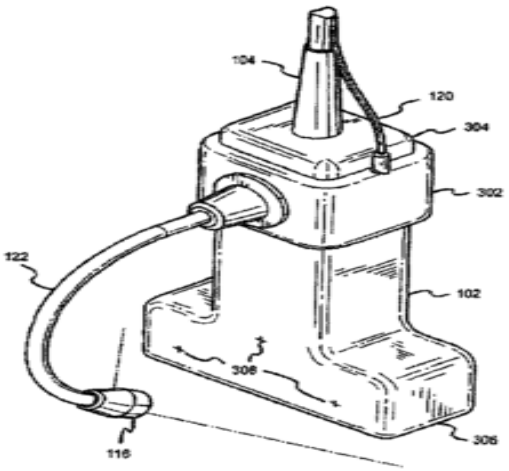
提供了一种非侵入性视觉成像系统，其中成像系统在诊断或治疗处理期间获取换能器位置的图像。另外，该系统适当地提供换能器以捕获患者信息，例如声学，温度或超声图像。例如，由换能器捕获的超声图像可以与相应的位置换能器图像相关，融合或以其他方式组合，使得相应的图像不仅代表换能器相对于患者的位置，而且还代表超声图像。被扫描的感兴趣区域。此外，提供了一种系统，其中与单个患者上的换能器位置有关的信息可用于捕获同一患者或随后患者的类似成像平面。此外，成像信息可以有效地用作医疗从业者的训练工具。