US009814398B2

(12) **United States Patent**
Gallant et al.

(10) **Patent No.: US 9,814,398 B2**
(45) **Date of Patent: Nov. 14, 2017**

(54) **METHOD AND APPARATUS FOR NON-INVASIVELY MEASURING HEMODYNAMIC PARAMETERS USING PARAMETRICS**

(71) Applicant: **Tensys Medical, Inc.**, San Diego, CA (US)

(72) Inventors: **Stuart L. Gallant**, San Diego, CA (US); **Gregory I. Voss**, Solana Beach, CA (US); **William H. Markle**, Laguna Niguel, CA (US)

(73) Assignee: **Tensys Medical, Inc.**, San Diego, CA (US)

(*) Notice: Subject to any disclaimer, the term of this patent is extended or adjusted under 35 U.S.C. 154(b) by 691 days.

(21) Appl. No.: **14/094,574**

(22) Filed: **Dec. 2, 2013**

(65) **Prior Publication Data**

US 2014/0163399 A1 Jun. 12, 2014

Related U.S. Application Data

(63) Continuation of application No. 12/987,928, filed on Jan. 10, 2011, now Pat. No. 8,597,195, which is a

(Continued)

(51) **Int. Cl.**
A61B 5/021 (2006.01)
A61B 5/00 (2006.01)

(52) **U.S. Cl.**
CPC ***A61B 5/021*** (2013.01); ***A61B 5/6843*** (2013.01); *A61B 2562/02* (2013.01); *A61B 2562/0247* (2013.01)

(58) **Field of Classification Search**
CPC ... A61B 5/021; A61B 5/6843; A61B 2562/02; A61B 2562/0247

(Continued)

(56) **References Cited**

U.S. PATENT DOCUMENTS

4,105,021 A 8/1978 Williams et al.
4,109,647 A 8/1978 Stern et al.

(Continued)

FOREIGN PATENT DOCUMENTS

EP 0284095 A1 9/1988
EP 0342249 A1 11/1989

(Continued)

OTHER PUBLICATIONS

Advertisement for HemoSonic .TM.100 by Arrow International—licensed under U.S. Pat. No. 5,479,928.

(Continued)

Primary Examiner — Navin Natnithithadha
(74) *Attorney, Agent, or Firm* — Gazdzinski & Associates, PC

(57) **ABSTRACT**

An improved method and apparatus for non-invasively assessing one or more hemodynamic parameters associated with the circulatory system of a living organism. In one aspect, the invention comprises a method of measuring a hemodynamic parameter (e.g., arterial blood pressure) by applanating or compressing portions of tissue proximate to the blood vessel of concern until a desired condition is achieved, and then measuring the hemodynamic parameter. Such applanation effectively mitigates transfer and other losses created by the tissue proximate to the blood vessel, thereby facilitating accurate and robust tonometric measurement. An algorithm adapted to maintain optimal levels of applanation is also described. Methods and apparatus for scaling such hemodynamic parameter measurements based on subject physiology, and providing treatment to the subject based on the measured parameters, are also disclosed.

20 Claims, 31 Drawing Sheets

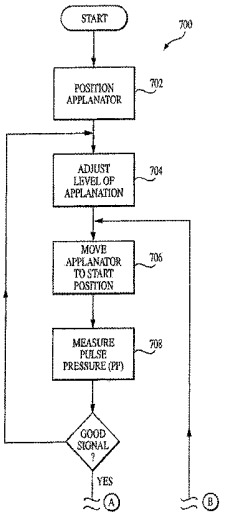

Related U.S. Application Data

continuation of application No. 10/838,404, filed on May 3, 2004, now Pat. No. 7,867,170, which is a continuation of application No. 10/072,508, filed on Feb. 5, 2002, now Pat. No. 6,730,038.

(58) **Field of Classification Search**
USPC 600/481, 483–486, 488, 490–504
See application file for complete search history.

(56) **References Cited**

U.S. PATENT DOCUMENTS

4,127,114 A 11/1978 Bretscher
4,154,231 A 5/1979 Russell
4,239,047 A 12/1980 Griggs, III et al.
4,249,540 A 2/1981 Horimoto et al.
4,349,034 A 9/1982 Ramsey, III
4,476,875 A 10/1984 Nilsson et al.
4,566,462 A 1/1986 Janssen
4,590,948 A 5/1986 Nilsson
4,596,254 A 6/1986 Adrian et al.
4,651,747 A 3/1987 Link
4,664,126 A 5/1987 Link
4,719,923 A 1/1988 Hartwell et al.
4,754,761 A 7/1988 Ramsey, III et al.
4,771,792 A 9/1988 Seale
4,796,184 A 1/1989 Bahr et al.
4,807,638 A 2/1989 Sramek
4,867,170 A 9/1989 Takahashi
4,869,261 A 9/1989 Penaz
4,880,013 A 11/1989 Chio
4,901,733 A 2/1990 Kaida et al.
4,924,871 A 5/1990 Honeyager
4,960,128 A 10/1990 Gordon et al.
5,029,589 A 7/1991 Kato
5,030,956 A 7/1991 Murphy
5,033,471 A 7/1991 Yokoe et al.
5,042,496 A 8/1991 Sjonell
5,072,733 A 12/1991 Spector et al.
5,094,244 A 3/1992 Callahan et al.
5,119,822 A 6/1992 Niwa
5,152,297 A 10/1992 Meister et al.
5,158,091 A * 10/1992 Butterfield A61B 5/021 600/485
5,163,438 A 11/1992 Gordon et al.
5,170,796 A 12/1992 Kobayashi
5,238,000 A 8/1993 Niwa
5,240,007 A * 8/1993 Pytel A61B 5/02241 600/485
5,241,964 A 9/1993 McQuilkin
5,261,412 A * 11/1993 Butterfield A61B 5/02255 600/485
5,263,484 A * 11/1993 Martin A61B 5/021 600/485
5,273,046 A * 12/1993 Butterfield A61B 5/021 600/485
5,284,150 A * 2/1994 Butterfield A61B 5/021 600/485
5,368,039 A 11/1994 Moses
5,406,952 A 4/1995 Barnes et al.
5,439,001 A 8/1995 Butterfield et al.
5,450,852 A 9/1995 Archibald et al.
5,467,771 A 11/1995 Narimatsu et al.
5,479,928 A 1/1996 Cathignol et al.
5,485,848 A 1/1996 Jackson et al.
5,494,043 A 2/1996 O'Sullivan et al.
5,533,511 A 7/1996 Kaspari et al.
5,551,440 A 9/1996 Miyawaki
5,590,649 A 1/1997 Caro et al.
5,617,867 A 4/1997 Butterfield et al.
5,634,467 A 6/1997 Nevo
5,640,964 A 6/1997 Archibald et al.
5,642,733 A 7/1997 Archibald et al.
5,649,542 A 7/1997 Archibald et al.
5,649,543 A 7/1997 Hosaka et al.
5,720,292 A 2/1998 Poliac
5,722,414 A 3/1998 Archibald et al.
5,738,103 A 4/1998 Poliac
5,772,601 A 6/1998 Oka et al.
5,797,850 A 8/1998 Archibald et al.
5,830,149 A 11/1998 Oka et al.
5,832,924 A 11/1998 Archibald et al.
5,833,618 A 11/1998 Caro et al.
5,848,970 A 12/1998 Voss et al.
5,876,346 A * 3/1999 Corso A61B 5/02438 600/485
5,882,311 A 3/1999 O'Rourke
5,895,359 A 4/1999 Peel, III
5,908,027 A * 6/1999 Butterfield A61B 5/021 600/485
5,916,180 A 6/1999 Cundari et al.
5,938,618 A 8/1999 Archibald et al.
5,941,828 A 8/1999 Archibald et al.
5,964,711 A 10/1999 Voss et al.
5,993,394 A 11/1999 Poliac
6,010,457 A 1/2000 O'Rourke
6,017,314 A 1/2000 Poliac
6,027,452 A 2/2000 Flaherty et al.
6,099,477 A 8/2000 Archibald et al.
6,132,382 A 10/2000 Archibald et al.
6,159,157 A 12/2000 Archibald et al.
6,176,831 B1 1/2001 Voss et al.
6,228,033 B1 5/2001 Koobi et al.
6,228,034 B1 5/2001 Voss et al.
6,231,517 B1 5/2001 Forstner
6,241,679 B1 6/2001 Curran
6,245,022 B1 6/2001 Archibald et al.
6,270,461 B1 8/2001 Chio
6,290,650 B1 9/2001 Butterfield et al.
6,340,349 B1 1/2002 Archibald et al.
6,371,921 B1 4/2002 Caro et al.
6,471,655 B1 10/2002 Baura
6,475,153 B1 11/2002 Khair et al.
6,514,211 B1 2/2003 Baura
6,533,729 B1 3/2003 Khair et al.
6,554,774 B1 4/2003 Miele
6,558,335 B1 5/2003 Thede
6,730,038 B2 5/2004 Gallant et al.
6,752,760 B2 6/2004 Kouou
6,905,464 B2 6/2005 Kawanishi et al.
7,291,112 B2 * 11/2007 Martin A61B 5/022 600/485
7,390,303 B2 6/2008 Dafni
7,651,466 B2 1/2010 Hatib et al.
7,867,170 B2 * 1/2011 Gallant A61B 5/021 600/485
7,955,267 B2 * 6/2011 Voss A61B 5/022 600/485
7,976,471 B2 * 7/2011 Martin A61B 5/0048 600/485
8,506,497 B2 * 8/2013 Katayama A61B 5/021 600/485
8,597,195 B2 * 12/2013 Gallant A61B 5/021 600/485
8,945,016 B2 * 2/2015 Voss A61B 5/022 600/481
9,107,588 B2 * 8/2015 Katayama A61B 5/021
9,247,886 B2 * 2/2016 Finburgh A61B 5/022
2003/0149369 A1 * 8/2003 Gallant A61B 5/021 600/485
2004/0059234 A1 * 3/2004 Martin A61B 5/022 600/500
2004/0077955 A1 4/2004 Kawanishi et al.
2004/0210143 A1 * 10/2004 Gallant A61B 5/021 600/485
2006/0094965 A1 * 5/2006 Voss A61B 5/022 600/485
2008/0064968 A1 * 3/2008 Martin A61B 5/0048 600/493

(56) **References Cited**

U.S. PATENT DOCUMENTS

2011/0166458 A1* 7/2011 Gallant A61B 5/021
600/485

FOREIGN PATENT DOCUMENTS

EP	0595666	A2	5/1994
EP	0603666	A2	6/1994
EP	0818176	A1	1/1998
WO	WO-8400290	A1	2/1984
WO	WO-9207508	A1	5/1992
WO	WO-9500074	A1	1/1995
WO	WO-9513014	A1	5/1995
WO	WO-9825511	A2	6/1998
WO	WO-0100087	A1	1/2001
WO	WO-0217781	A1	3/2002

OTHER PUBLICATIONS

Anderson, E.A., et al (1989) "Flow-Mediated and Reflex Changes in Large Peripheral Artery Tone in Humans," Circulation 79:93-100.
Boashash, B., et al. (1987) "An Efficient Real-Time Implementation of the Wigner-Ville Distribution," IEEE Trans ASSP 35:1611-1618.
Cariou, Alain, et al. (1998) "Noninvasive Cardiac Output Monitoring by Aortic Blood Flow Determination: Evaluation of the Somete Cynemo-3000 System," Critical Care Medicine, vol. 26, No. 12, pp. 2066-2072.
Carson, E. R. et al. (1983) "The Mathematical Modeling of Metabolic and Endocrine Systems: Model Formulation, Identification, and Validation", John Wiley & Sons, NY, pp. 185-189.
Computerized Screening, Inc. (CSI) Celebrates 25 Years as Visionary Pioneer in Preventive Screening Technology Article by KNB Communications, posted on Friday, May 2, 2003 (2 pages).
Drzewiecki, G (1995) "Noninvasive Assessment of Arterial Blood Pressure and Mechanics," The Biomedical Engineering Handbook CRC Press, Boca Raton, FL, pp. 1196-1211.
Drzewiecki, G.M., et al. (1985) Generalization of the Transmural Pressure-Area Relation for the F emoral Artery, 7.sup.th Annual IEEE EMBS Conference 507,510.
Hartley, C.J., et al., "An Ultrasonic Method for Measuring Tissue Displacement: Technical Details and Validation for Measuring Myocardial Thickening," IEEE Trans Biomed, (1991) 38:735-747.
Hoeks, A.P.G., et al. (1985) Transcutaneous Detection of Relative Changes in Artery Diameter, Ultrasound in Med and Bio 11:51-59.
Mehra M.D., Mandeep R., et al., "Emergence of Electronic Home Monitoring in Chronic Heart Failure: Rationale, Feasibility, and Early Results with the HomMed Sentry-Observer System," CHF, 2000, 6:137-139.
Noninvasive Cardiovascular Monitoring (CircMon) information by JR Medical Ltd. (5 pages), 2000.
Al-Riyami, Bazdawi, et al., SQU Journal of Medical Sciences Article, Non-dipping Blood Pressure in Normotensive Patients with Obstructive Sleep Apnea (1 page), 1999.

* cited by examiner

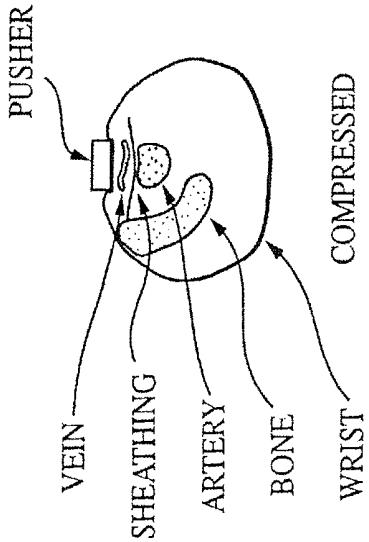
PUSHER
VEIN
SHEATHING
ARTERY
BONE
WRIST
COMPRESSED

FIG. 2

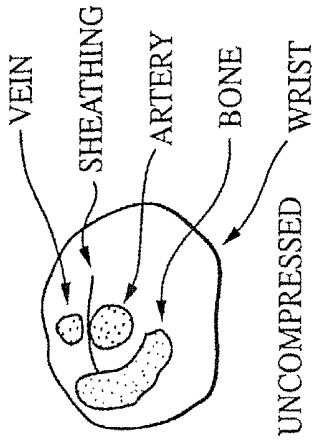
VEIN
SHEATHING
ARTERY
BONE
WRIST
UNCOMPRESSED

FIG. 1

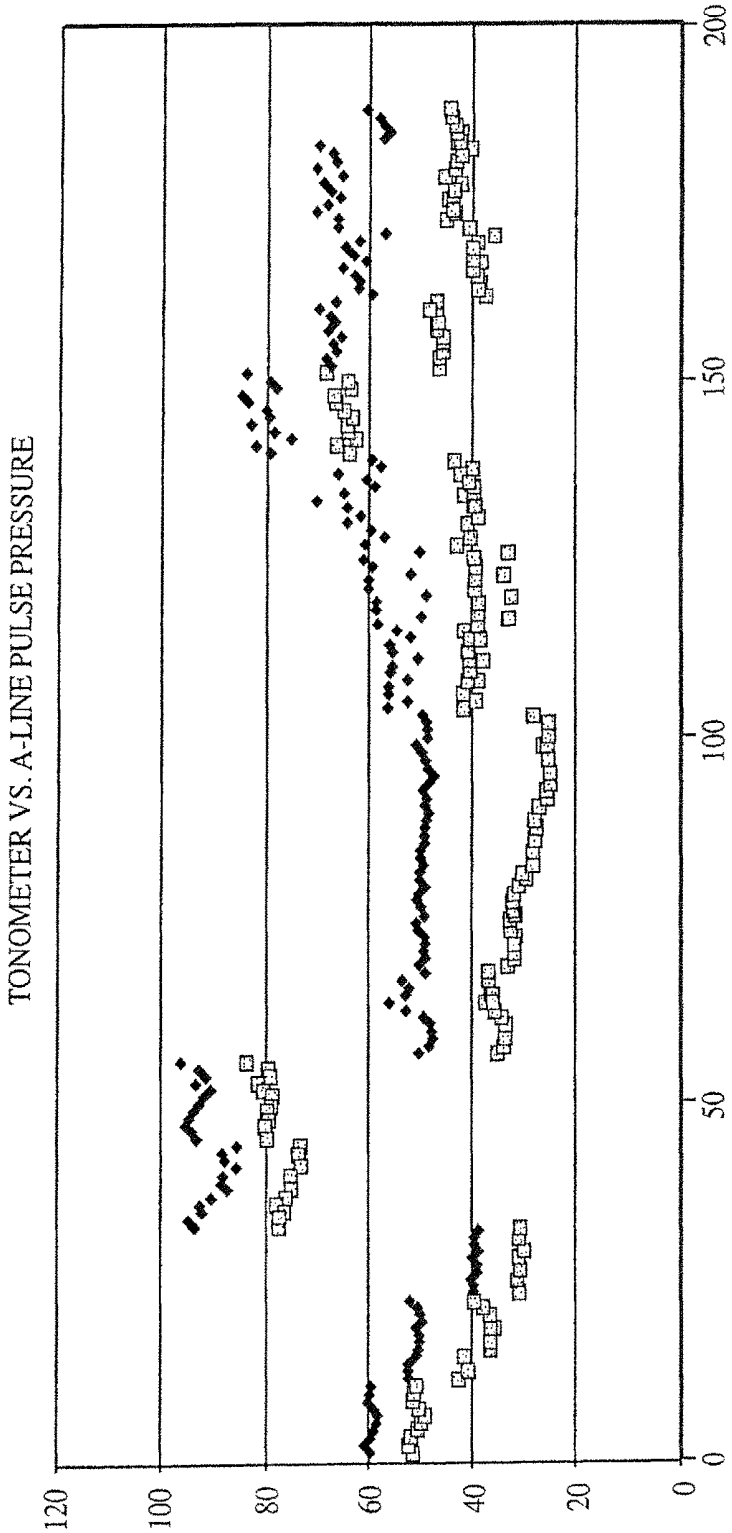
TONOMETER VS. A-LINE PULSE PRESSURE
120
100
80
60
40
20
0
0
50
100
150
200

FIG. 3

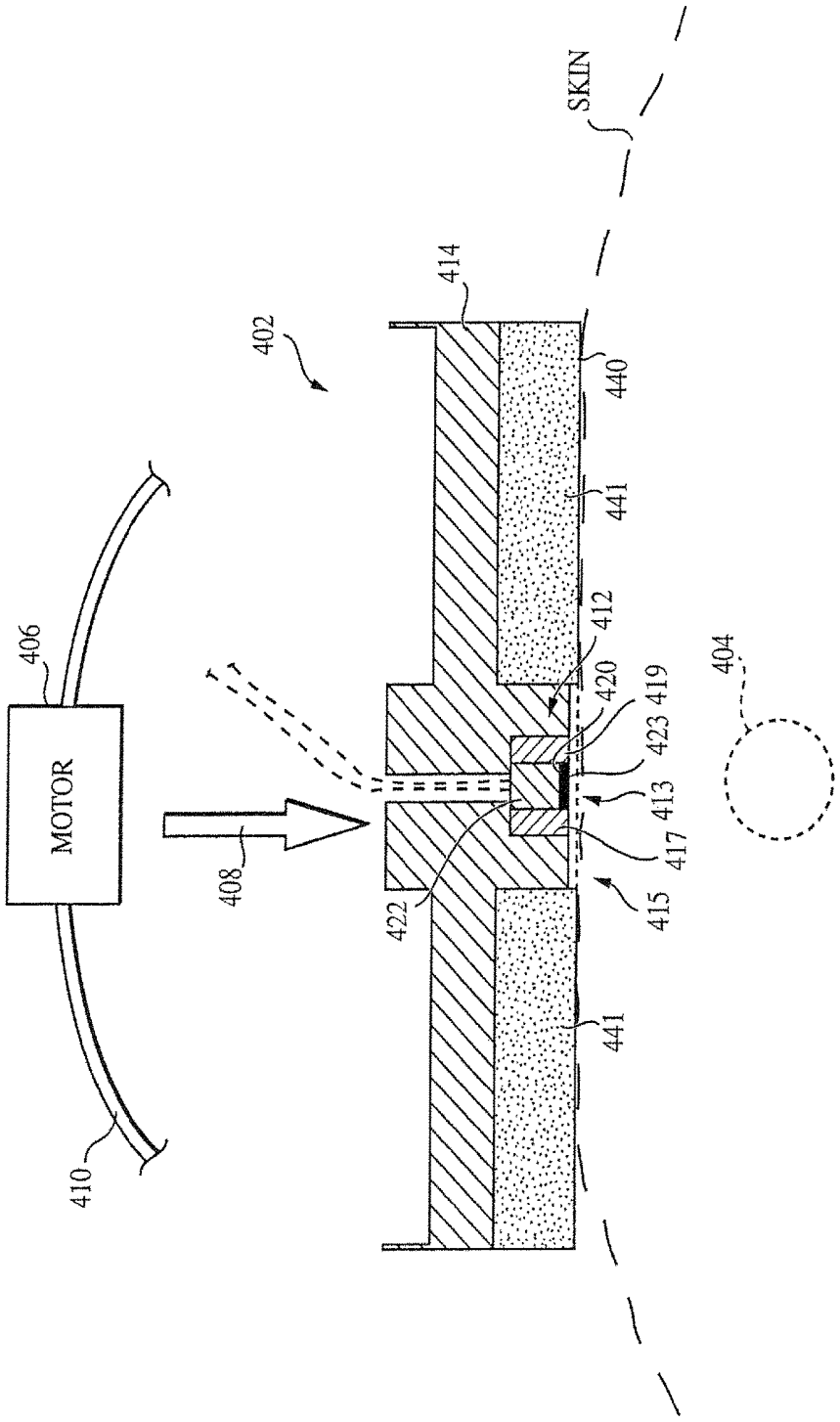
MOTOR
406
410
408
402
414
422
420
412
423
419
413
417
415
440
441
441
SKIN
404

FIG. 4

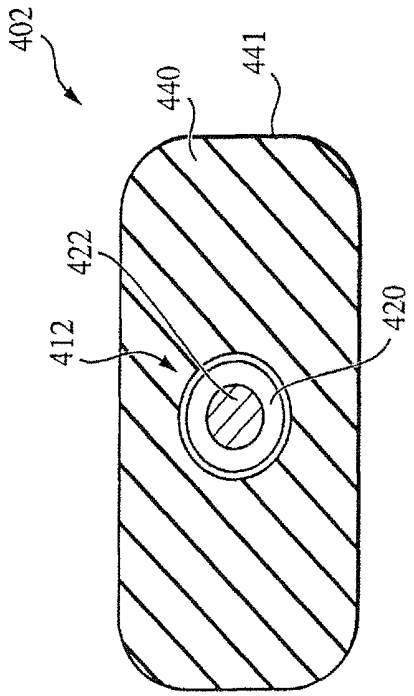

FIG. 4a

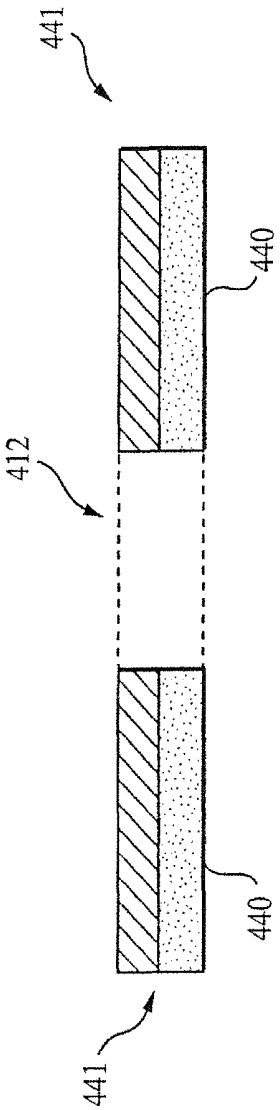

FIG. 4b

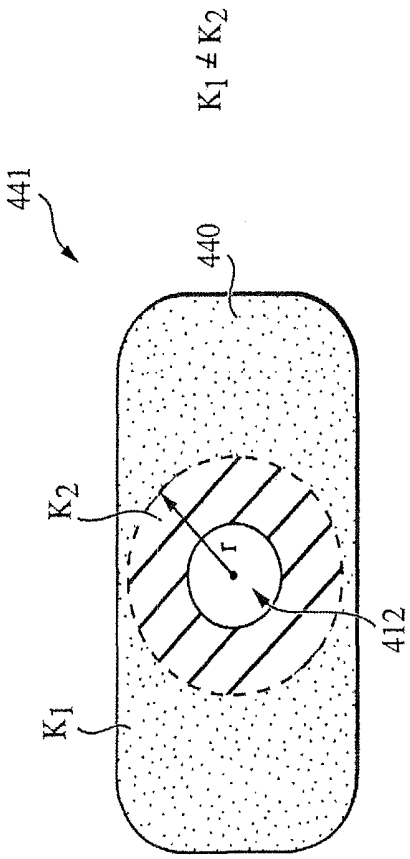

FIG. 4c

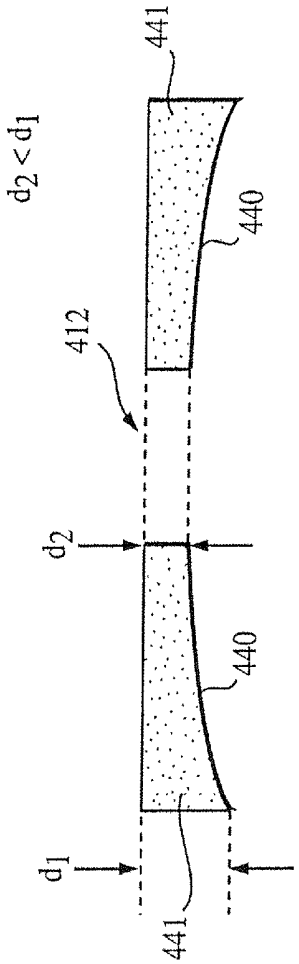

FIG. 4d

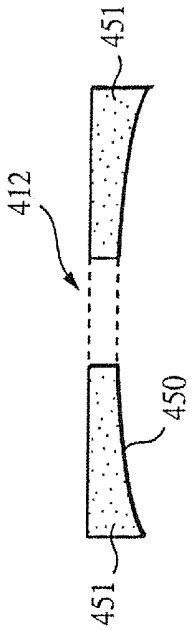

FIG. 4f

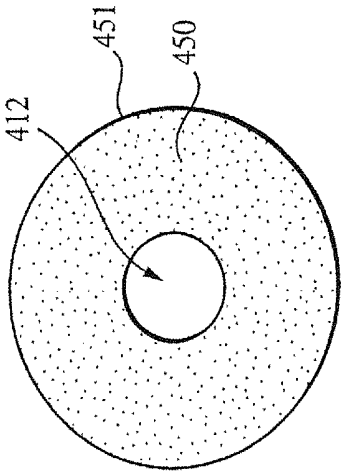

FIG. 4e

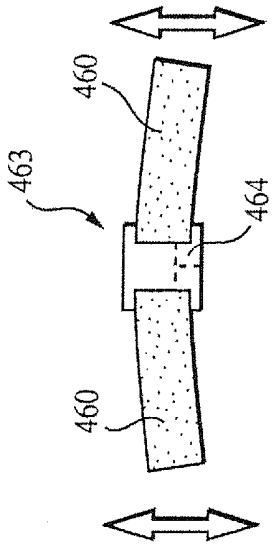

FIG. 4h

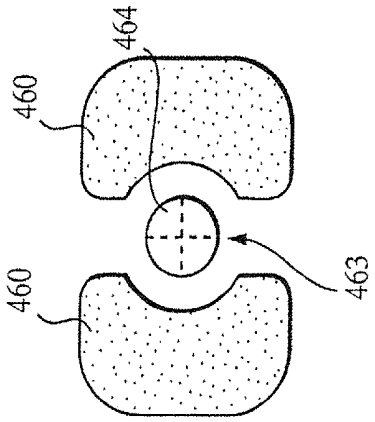

FIG. 4g

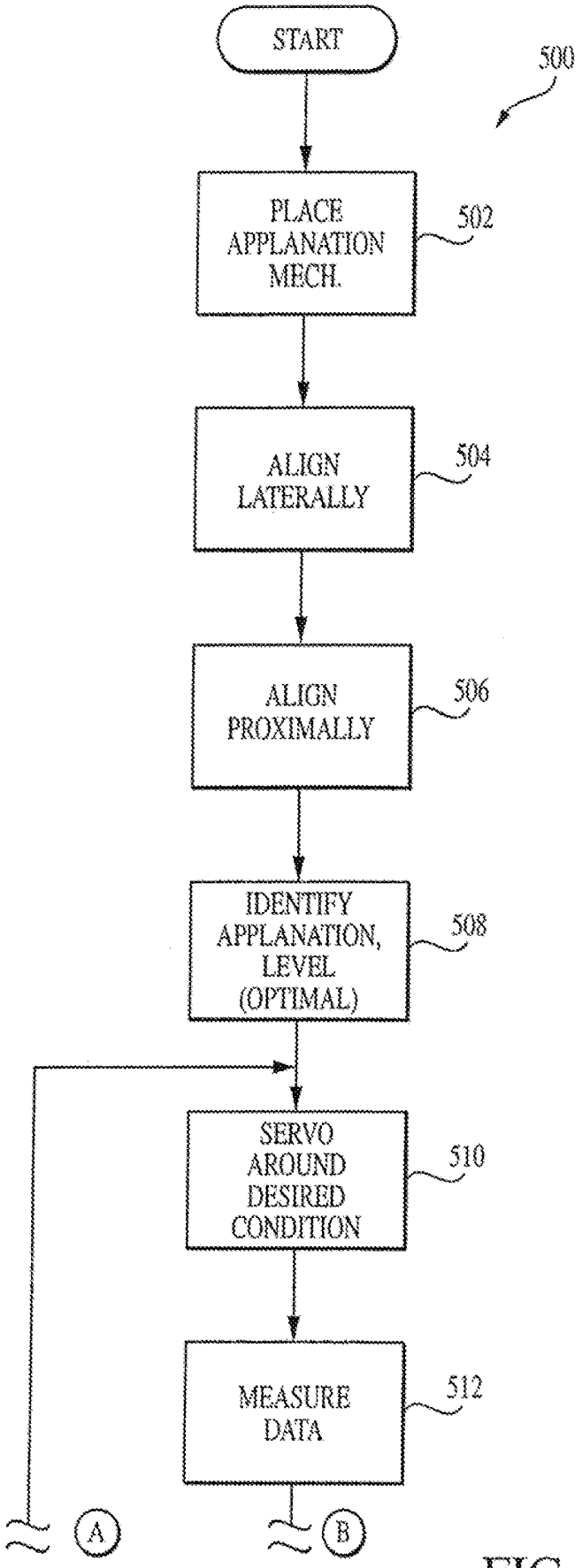
START
500
PLACE APPLANATION MECH.
502
ALIGN LATERALLY
504
ALIGN PROXIMALLY
506
IDENTIFY APPLANATION, LEVEL (OPTIMAL)
508
SERVO AROUND DESIRED CONDITION
510
MEASURE DATA
512
A
B

FIG. 5

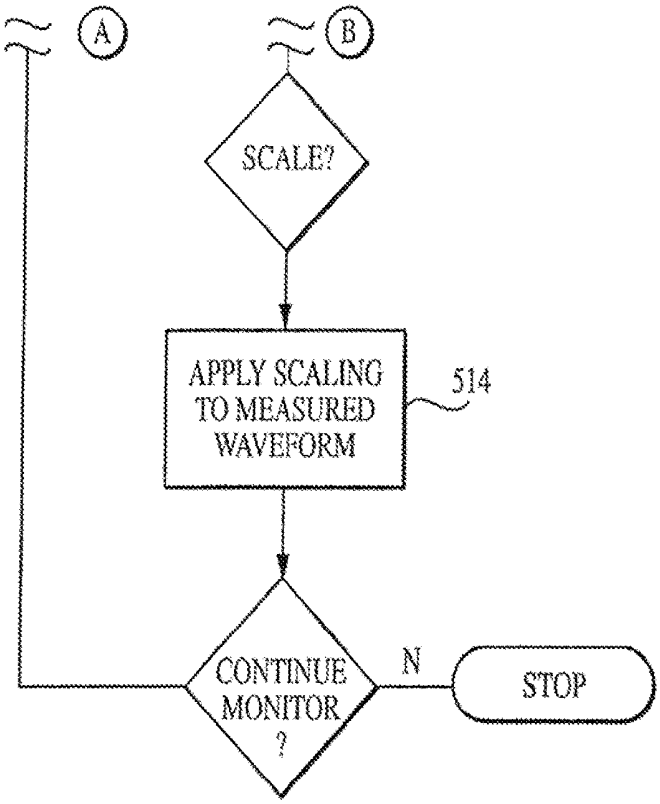

FIG. 5
(Continued)

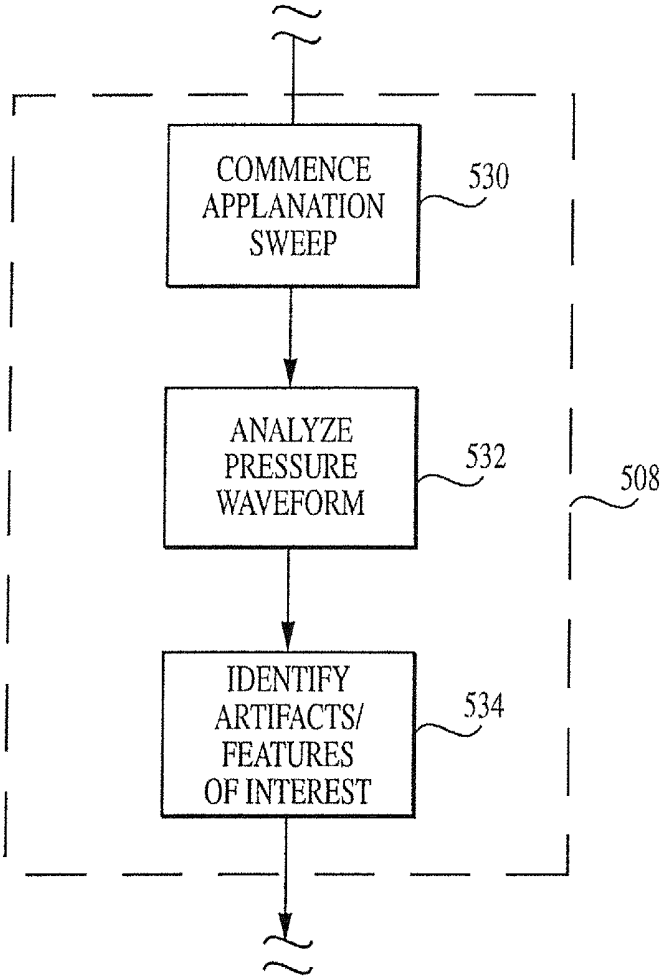
COMMENCE APPLANATION SWEEP
530
ANALYZE PRESSURE WAVEFORM
532
508
IDENTIFY ARTIFACTS/ FEATURES OF INTEREST
534

FIG. 5a

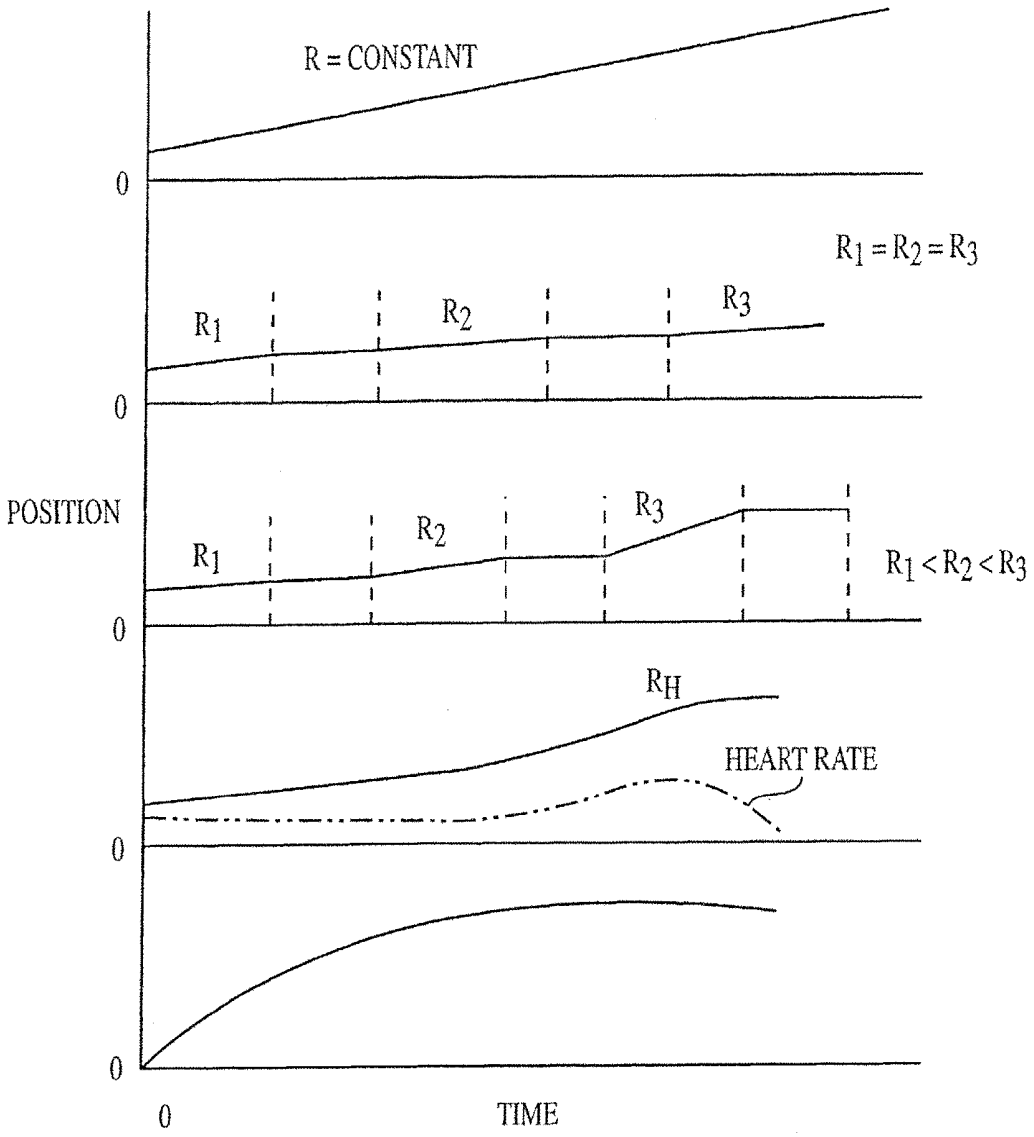
R = CONSTANT
0
$R_1 = R_2 = R_3$
R_1
R_2
R_3
0
POSITION
R_1
R_2
R_3
$R_1 < R_2 < R_3$
0
R_H
HEART RATE
0
0
0
TIME

FIG. 5b

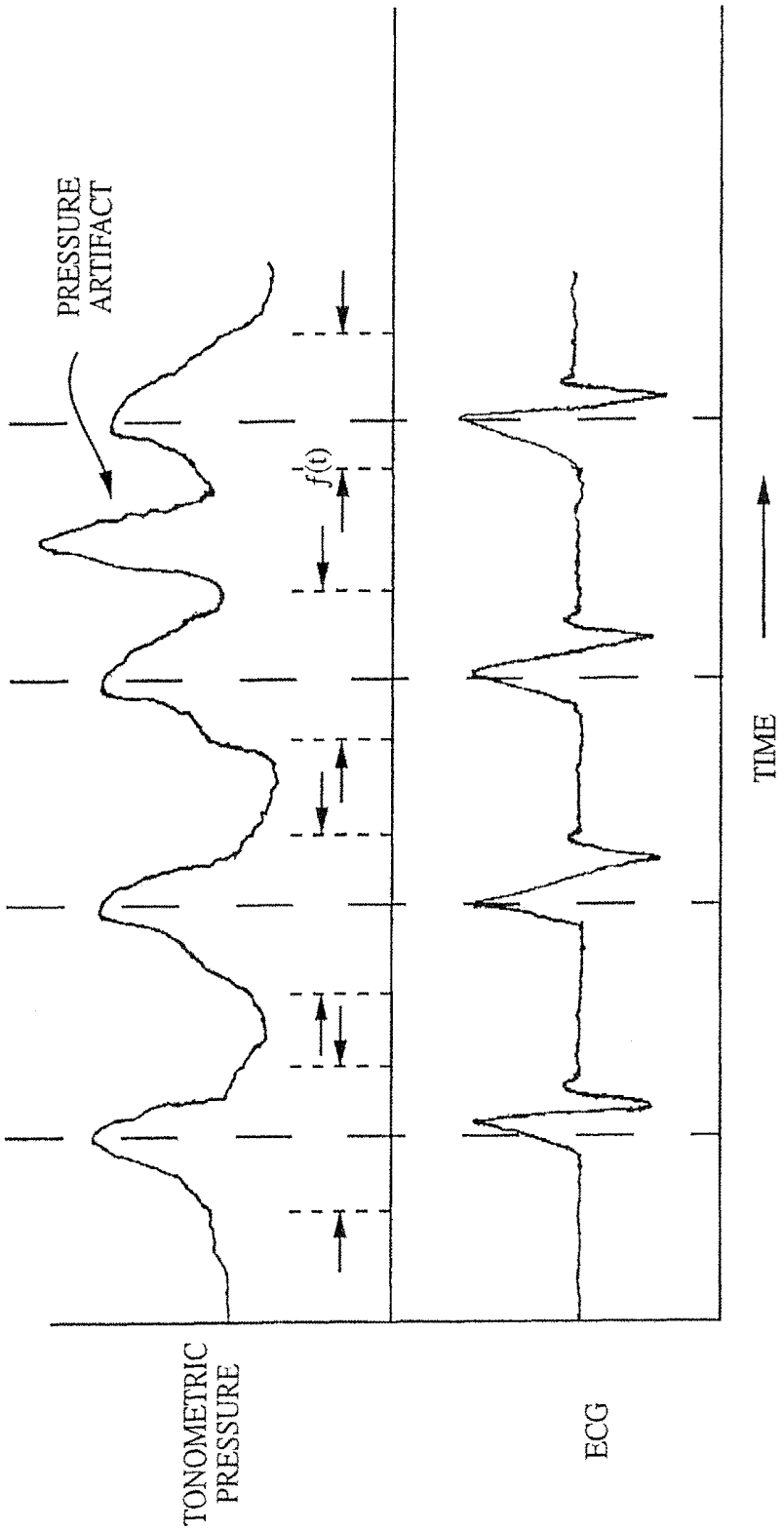

FIG. 5c

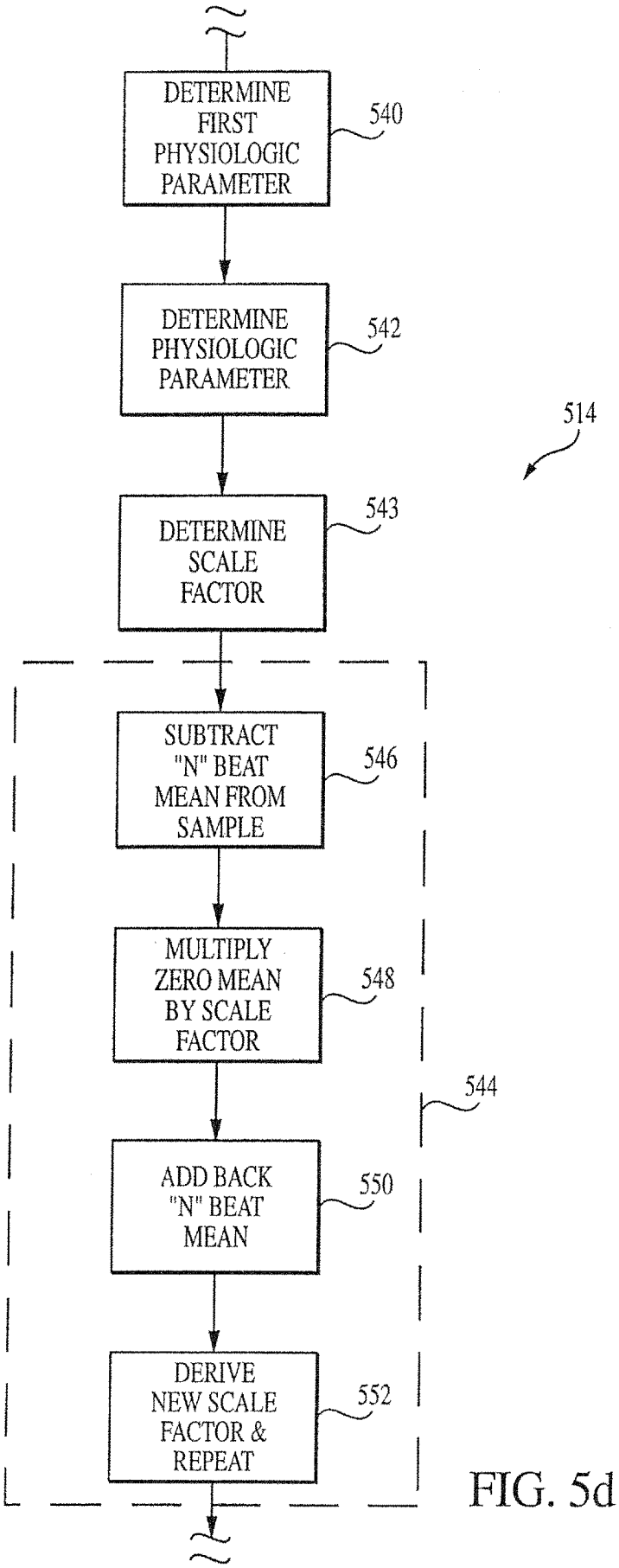
DETERMINE FIRST PHYSIOLOGIC PARAMETER
540
DETERMINE PHYSIOLOGIC PARAMETER
542
514
DETERMINE SCALE FACTOR
543
SUBTRACT "N" BEAT MEAN FROM SAMPLE
546
MULTIPLY ZERO MEAN BY SCALE FACTOR
548
544
ADD BACK "N" BEAT MEAN
550
DERIVE NEW SCALE FACTOR & REPEAT
552

FIG. 5d

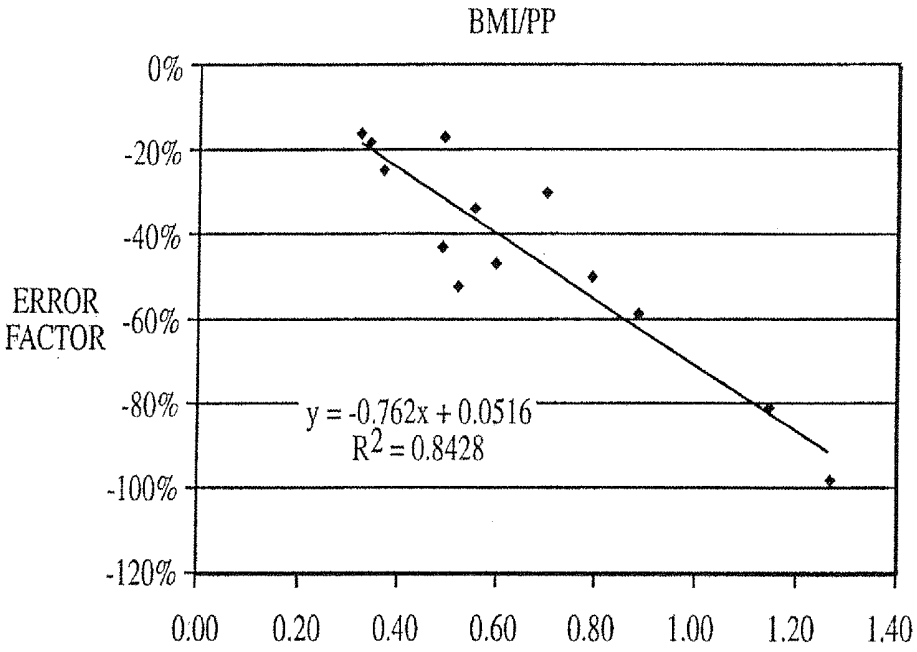
BMI/PP
0%
-20%
-40%
-60%
-80%
-100%
-120%
ERROR FACTOR
y = -0.762x + 0.0516
R2 = 0.8428
0.00
0.20
0.40
0.60
0.80
1.00
1.20
1.40

FIG. 5e

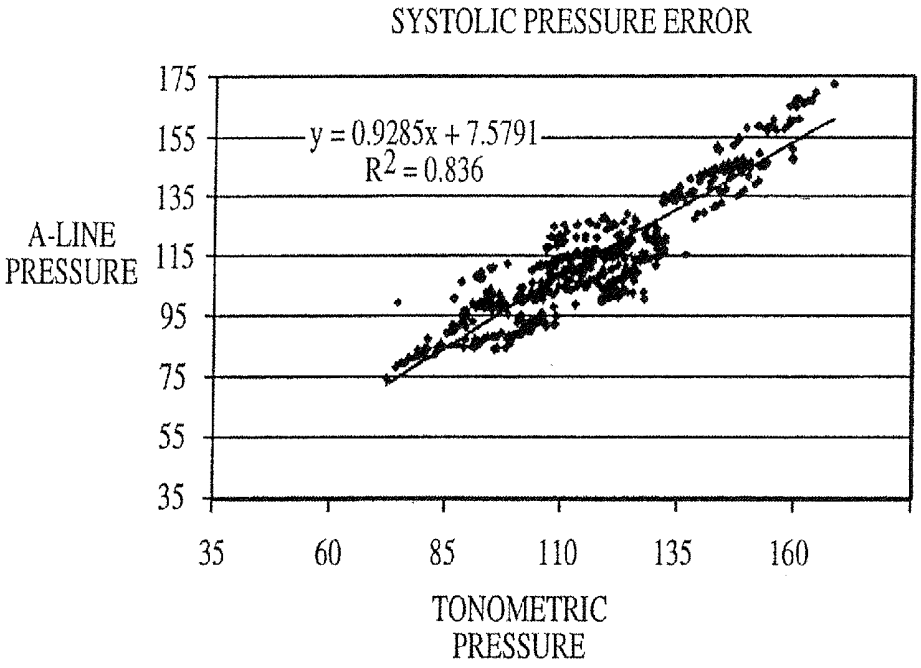
SYSTOLIC PRESSURE ERROR
y = 0.9285x + 7.5791
R2 = 0.836
A-LINE PRESSURE
175
155
135
115
95
75
55
35
35
60
85
110
135
160
TONOMETRIC PRESSURE

FIG. 5f

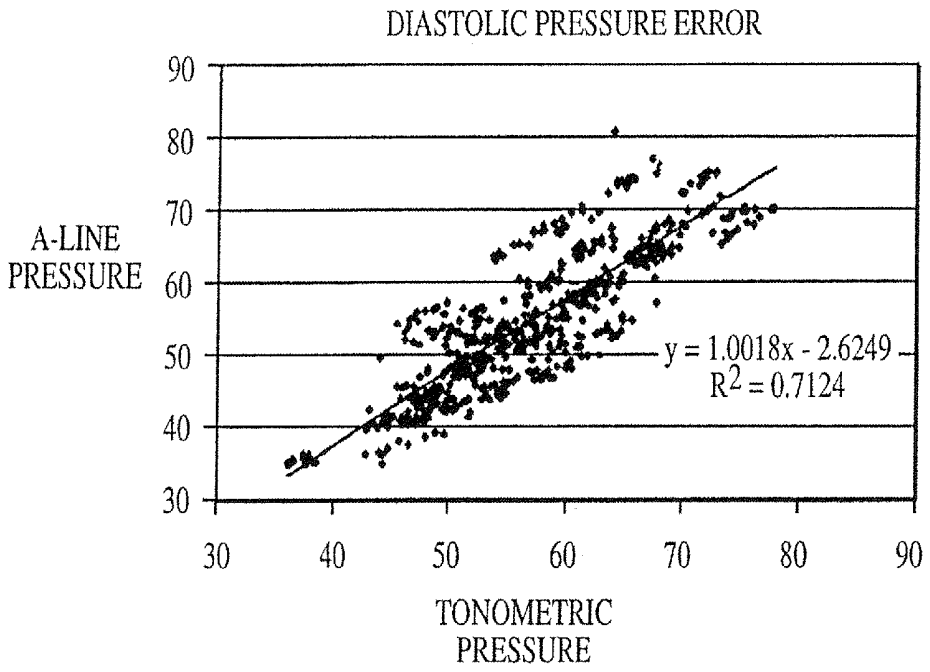
DIASTOLIC PRESSURE ERROR
A-LINE PRESSURE
90
80
70
60
50
40
30
30
40
50
60
70
80
90
TONOMETRIC PRESSURE
y = 1.0018x - 2.6249
R2 = 0.7124

FIG. 5g

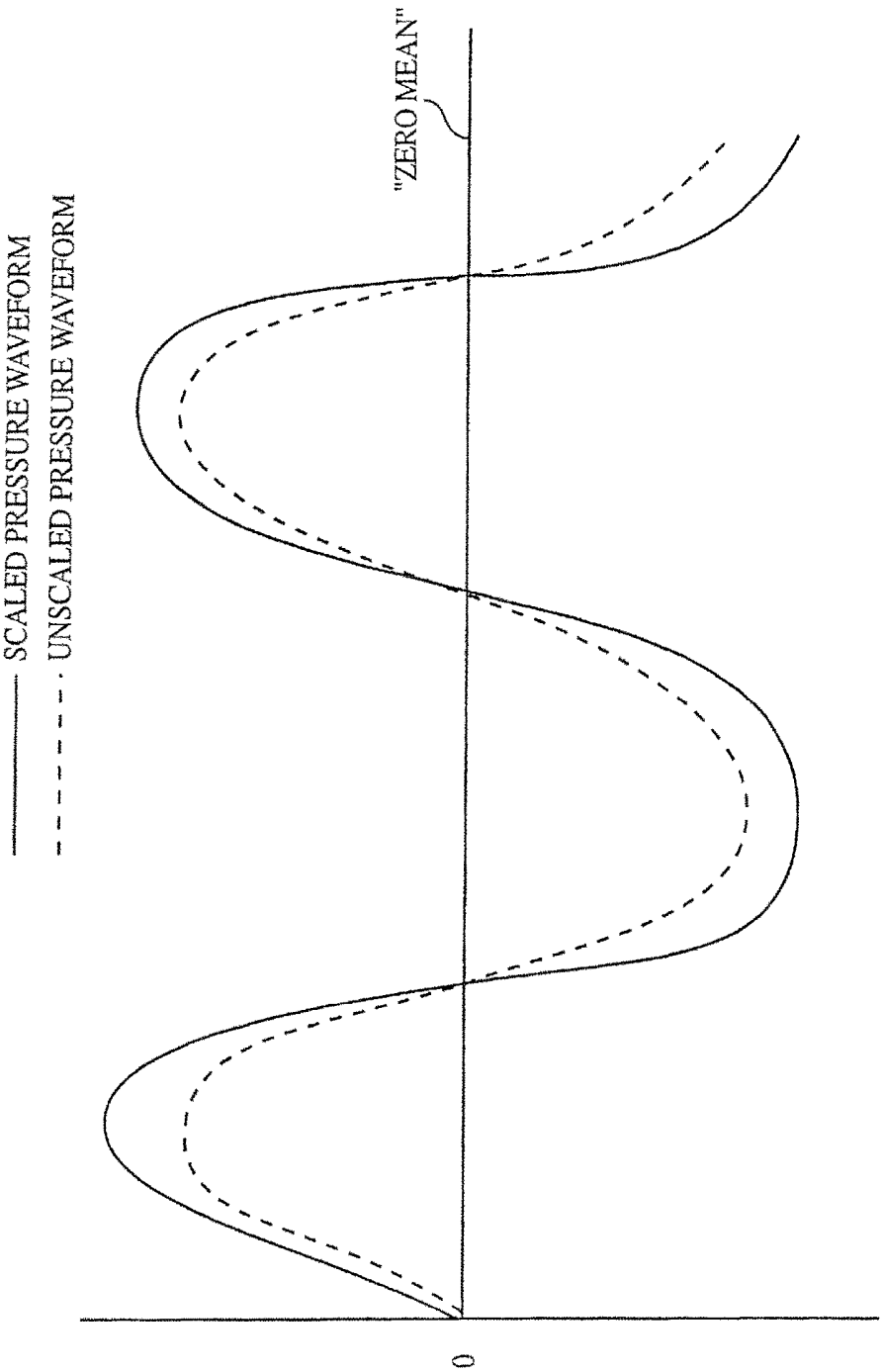
SCALED PRESSURE WAVEFORM
UNSCALED PRESSURE WAVEFORM
"ZERO MEAN"
0

FIG. 5h

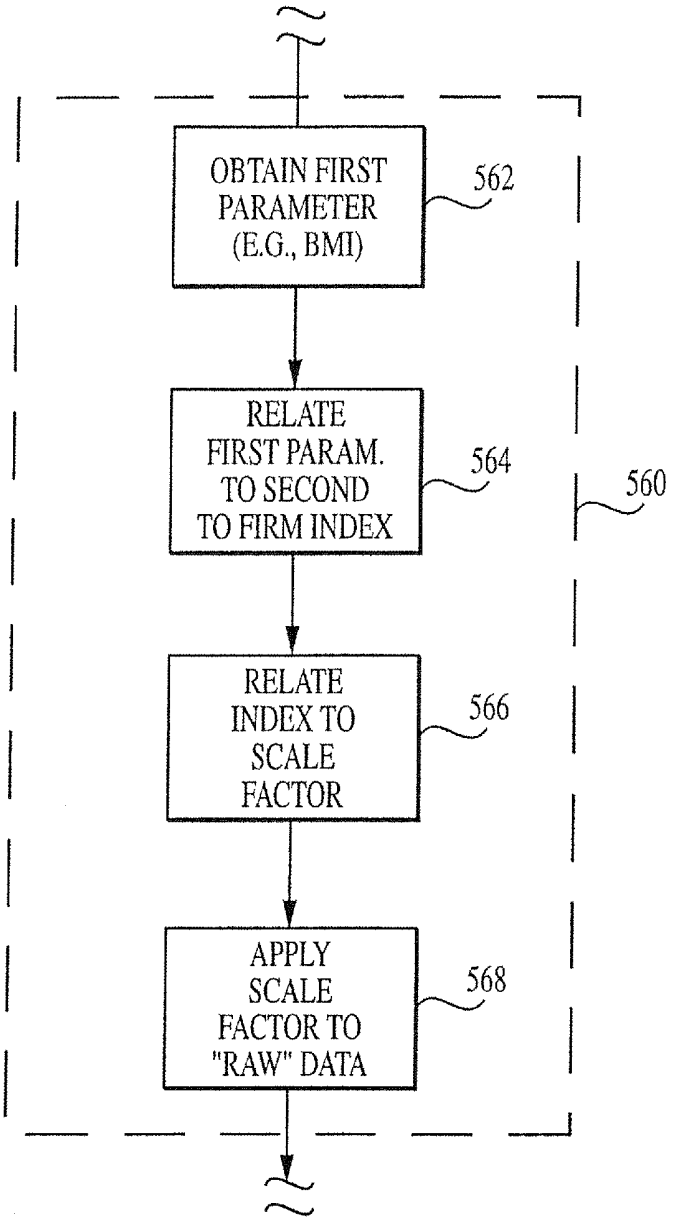
OBTAIN FIRST PARAMETER (E.G., BMI)
562
RELATE FIRST PARAM. TO SECOND TO FIRM INDEX
564
560
RELATE INDEX TO SCALE FACTOR
566
APPLY SCALE FACTOR TO "RAW" DATA
568

FIG. 5i

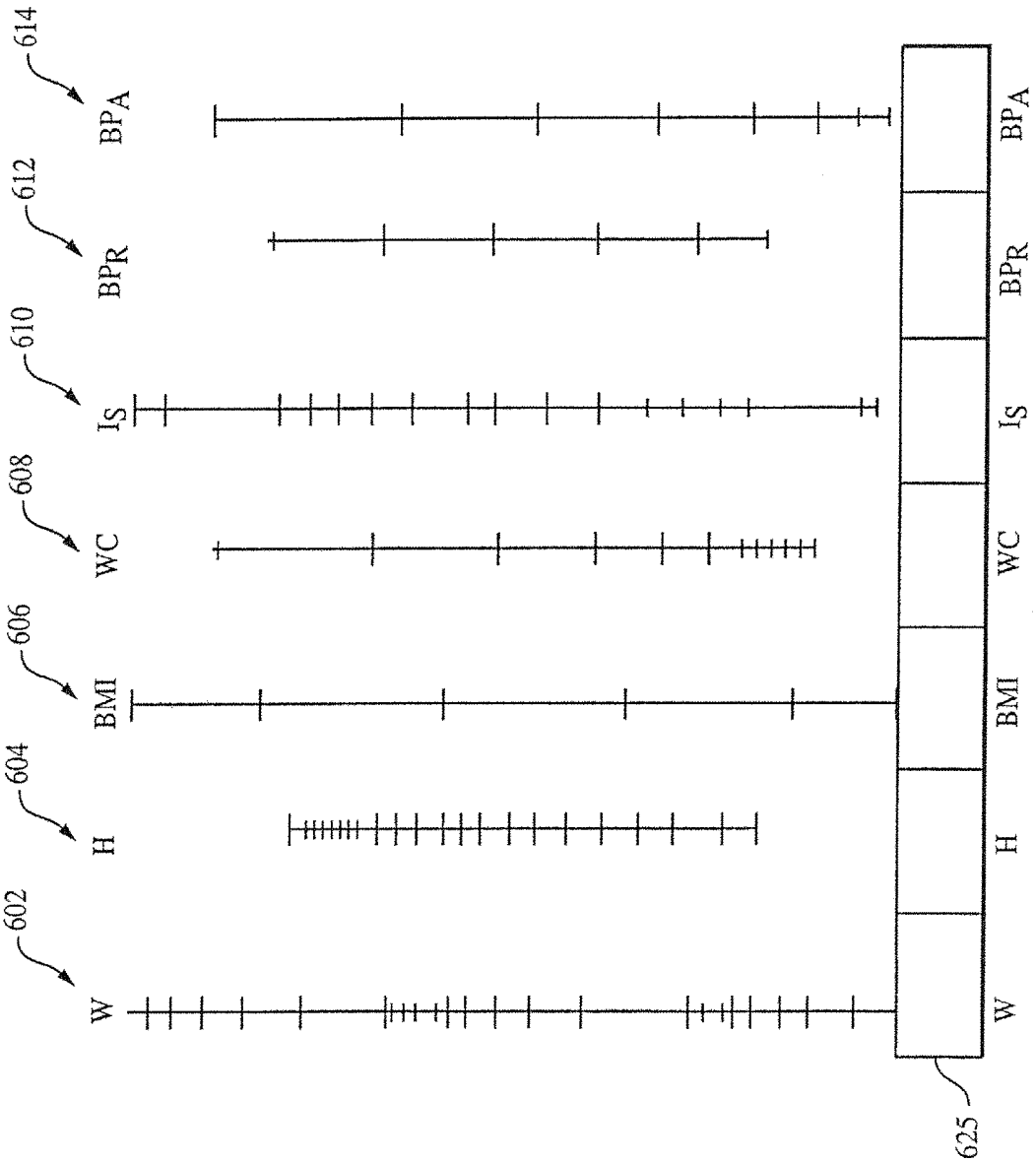

FIG. 6

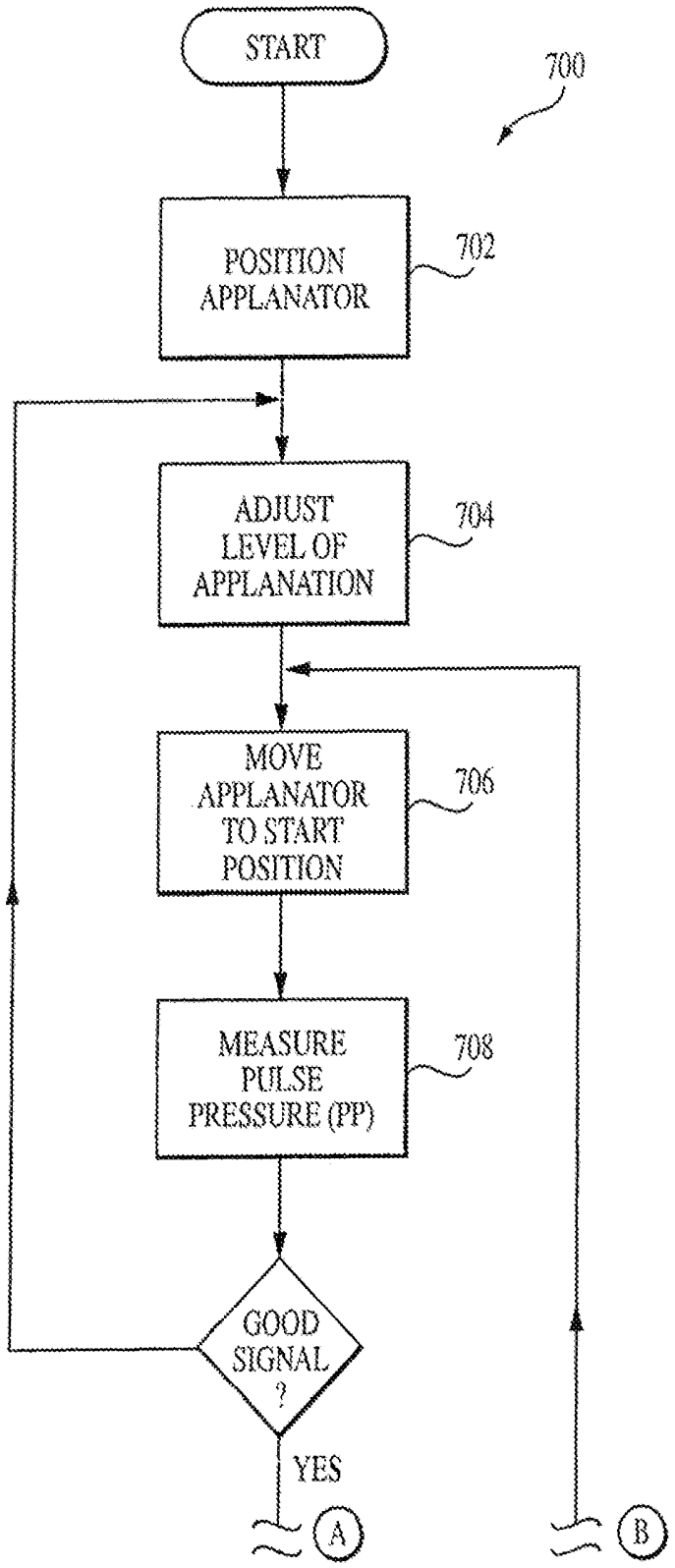
START
700
POSITION APPLANATOR
702
ADJUST LEVEL OF APPLANATION
704
MOVE APPLANATOR TO START POSITION
706
MEASURE PULSE PRESSURE (PP)
708
GOOD SIGNAL ?
YES
A
B

FIG. 7

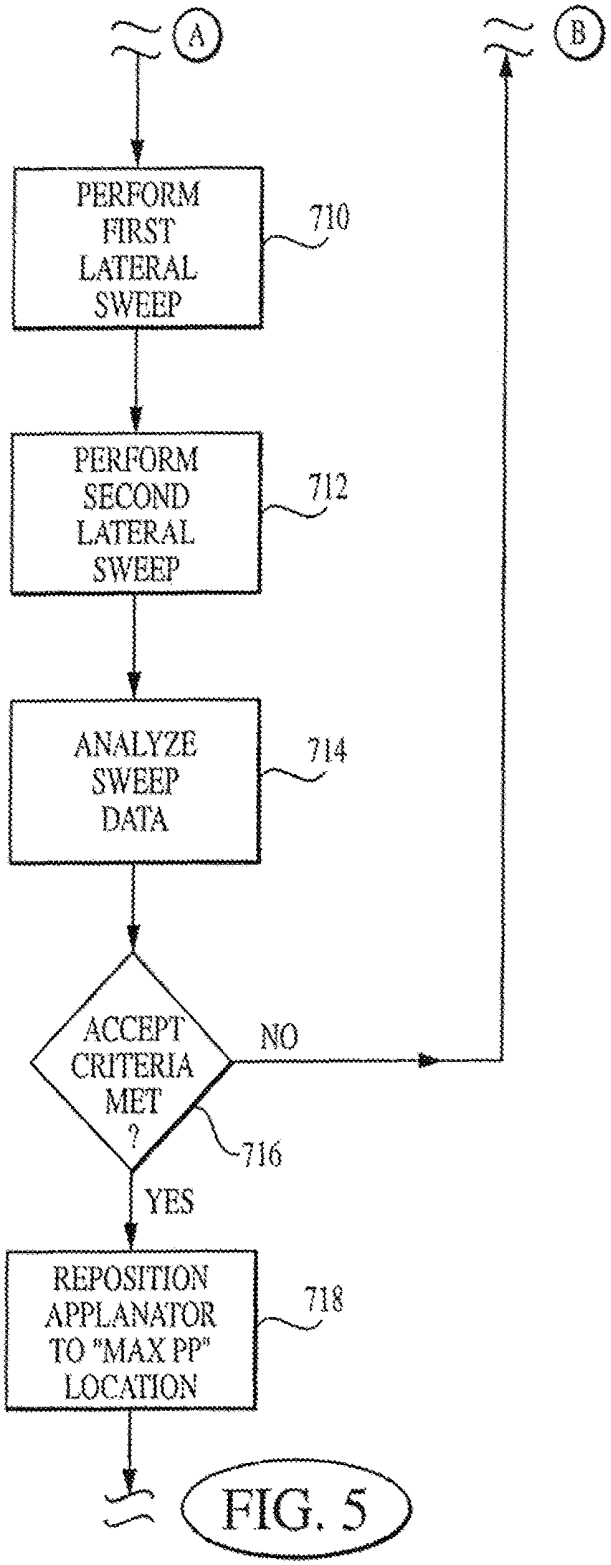

FIG. 7

(Continued)

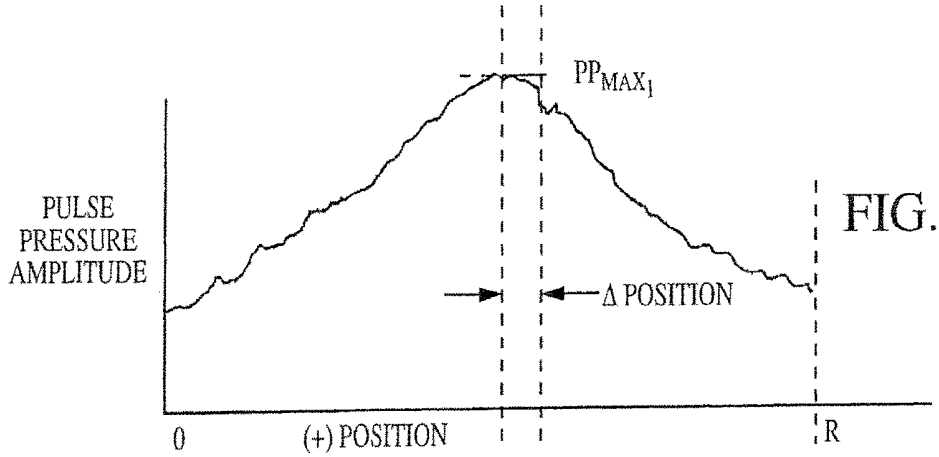

FIG. 7a

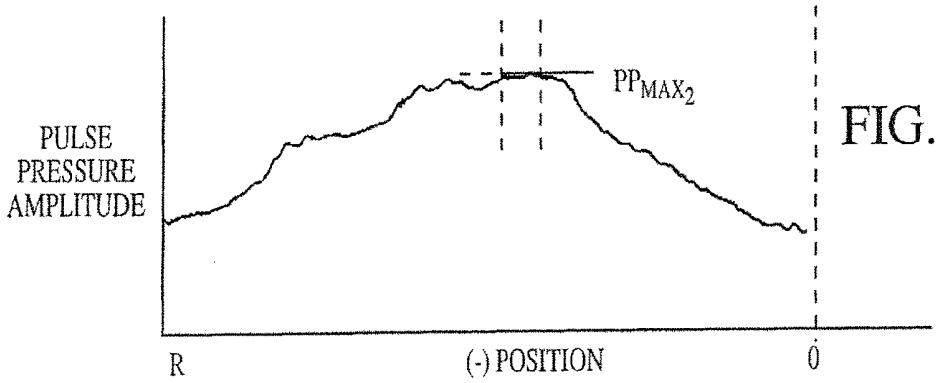

FIG. 7b

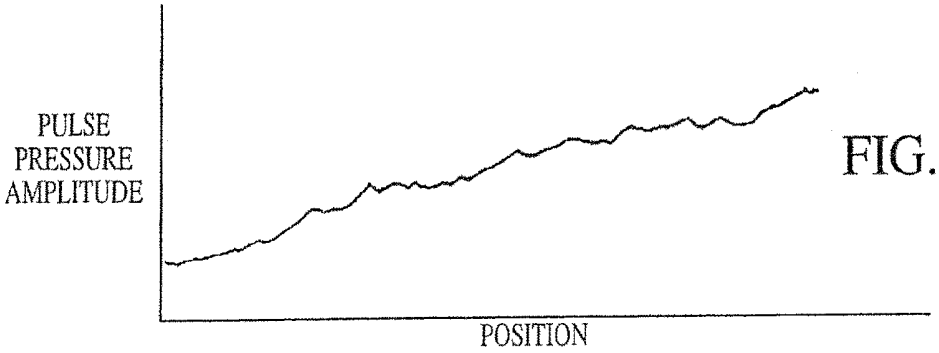

FIG. 7c

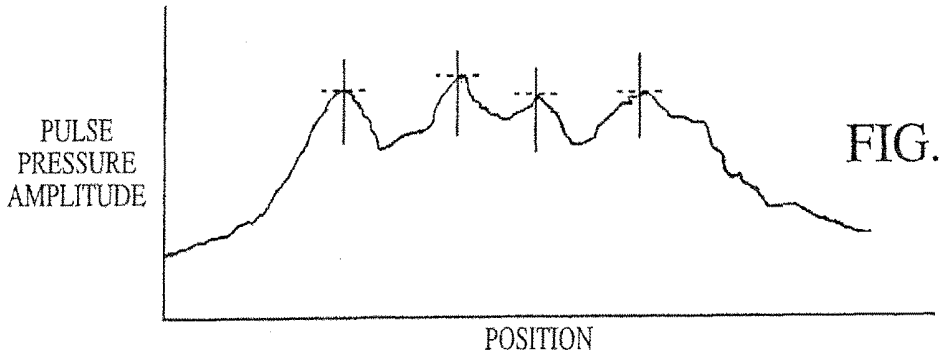

FIG. 7d

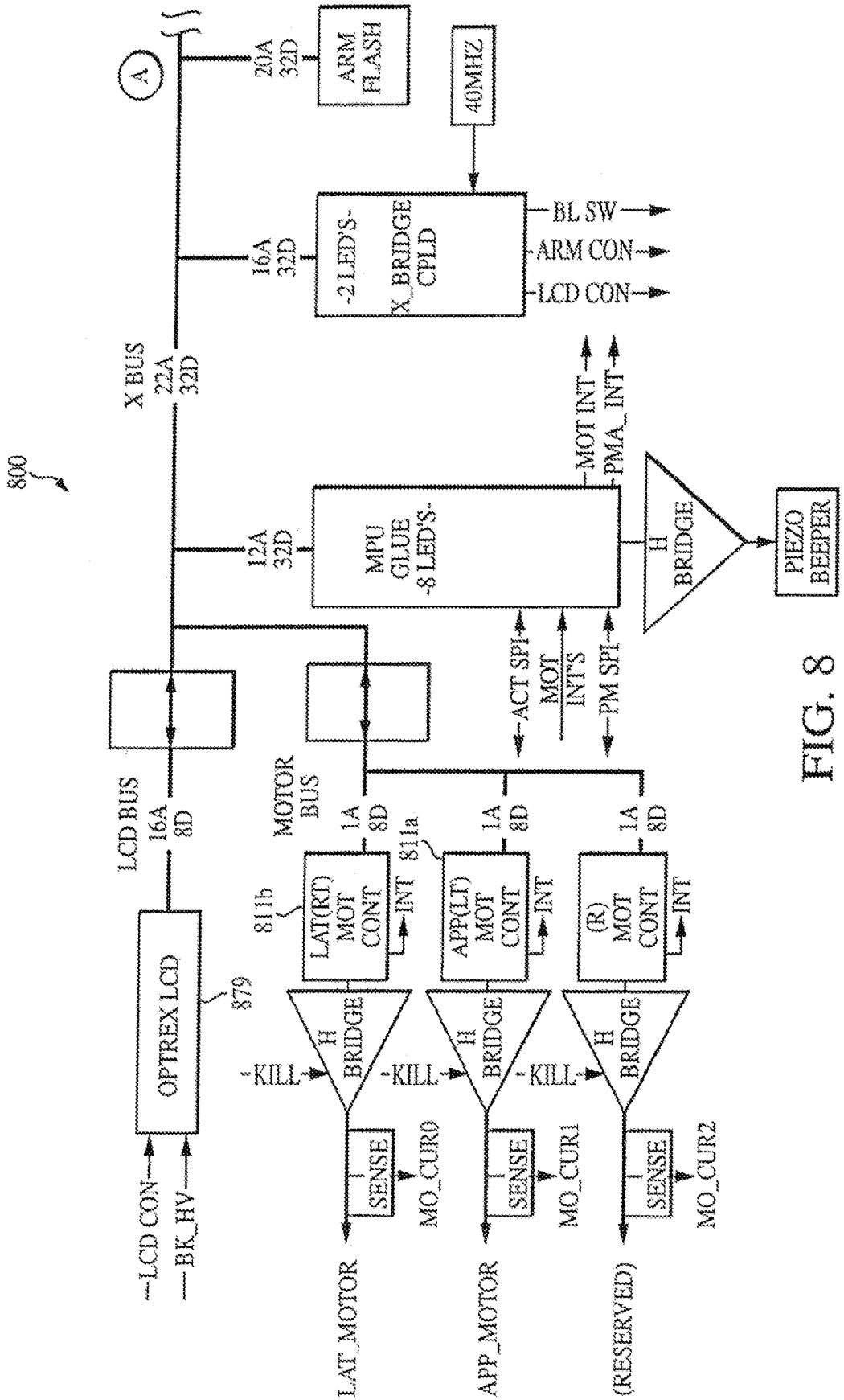
800
A
20A
32D
ARM
FLASH
40MHZ
16A
32D
-2 LED'S-
X_BRIDGE
CPLD
BL SW
ARM CON
LCD CON
X BUS
22A
32D
MOT INT
PMA_INT
12A
32D
MPU
GLUE
-8 LED'S-
H
BRIDGE
PIEZO
BEEPER
ACT SPI
MOT
INT'S
PM SPI
LCD BUS
16A
8D
MOTOR
BUS
1A
8D
811b
811a
LAT(KT)
MOT
CONT
APP(LT)
MOT
CONT
(R)
MOT
CONT
INT
OPTREX LCD
879
-KILL
SENSE
MO_CUR0
MO_CUR1
MO_CUR2
LCD CON
BK_HV
LAT_MOTOR
APP_MOTOR
(RESERVED)

FIG. 8

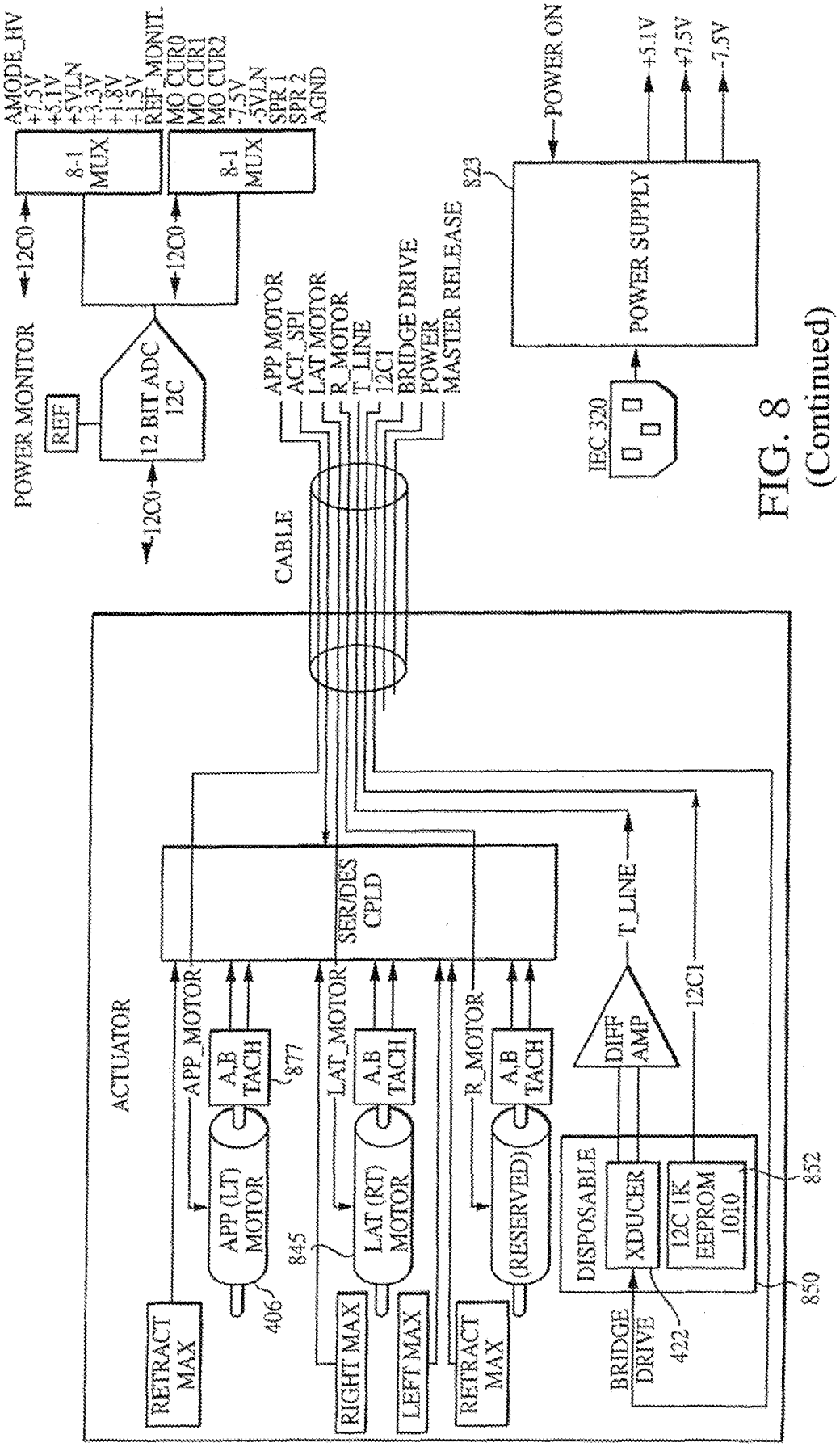

FIG. 8 (Continued)

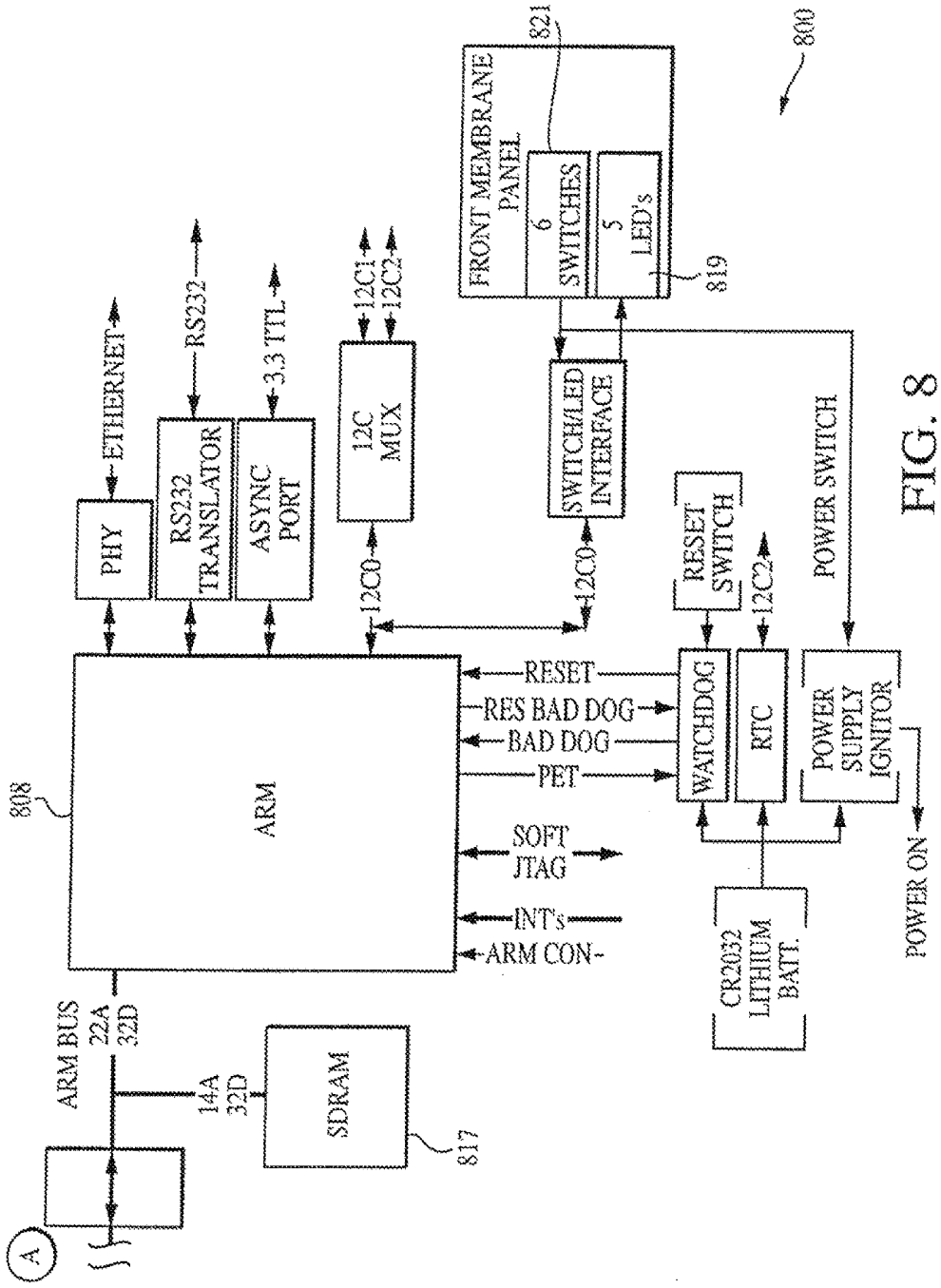

FIG. 8 (Continued)

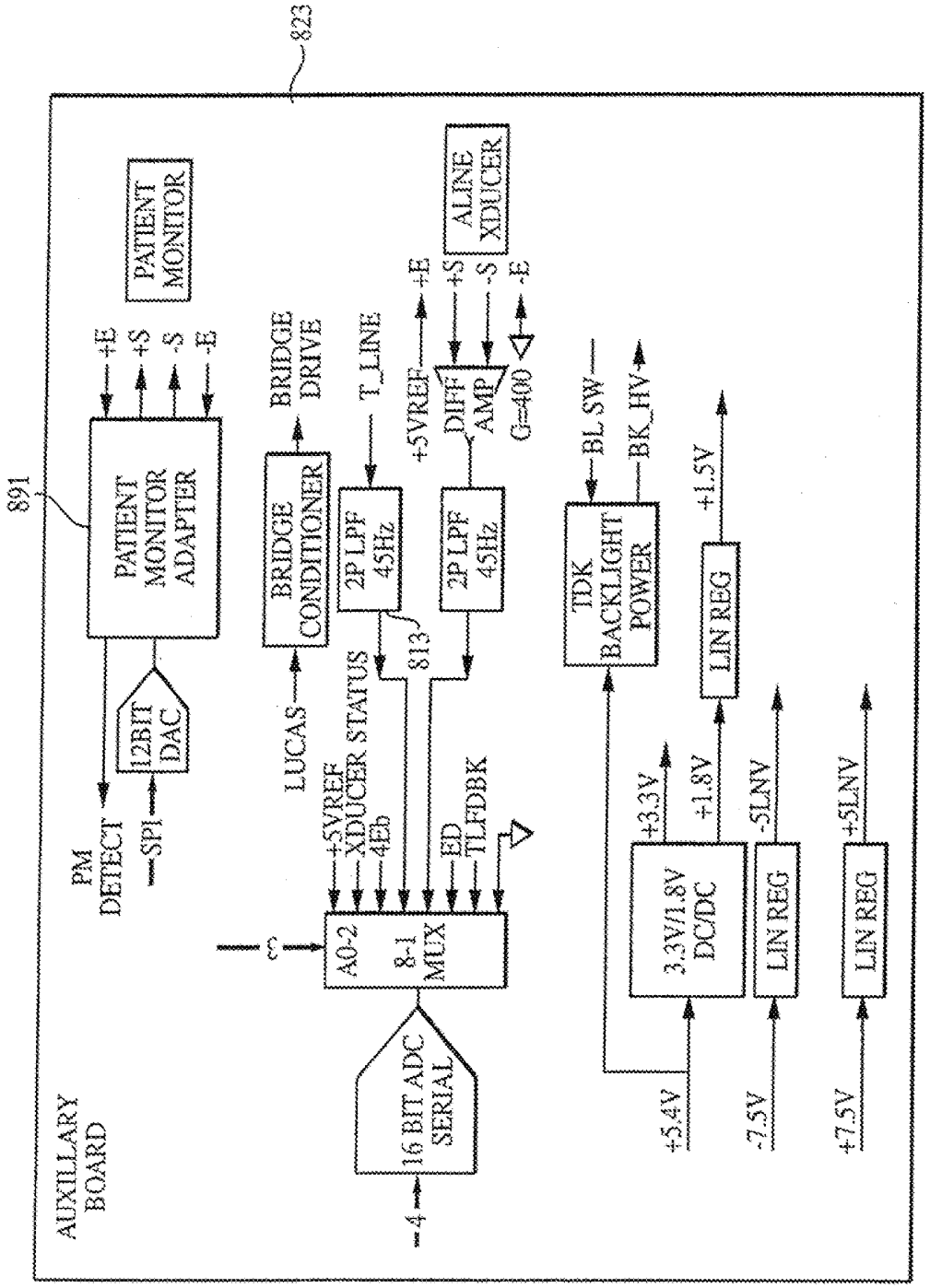

FIG. 8
(Continued)

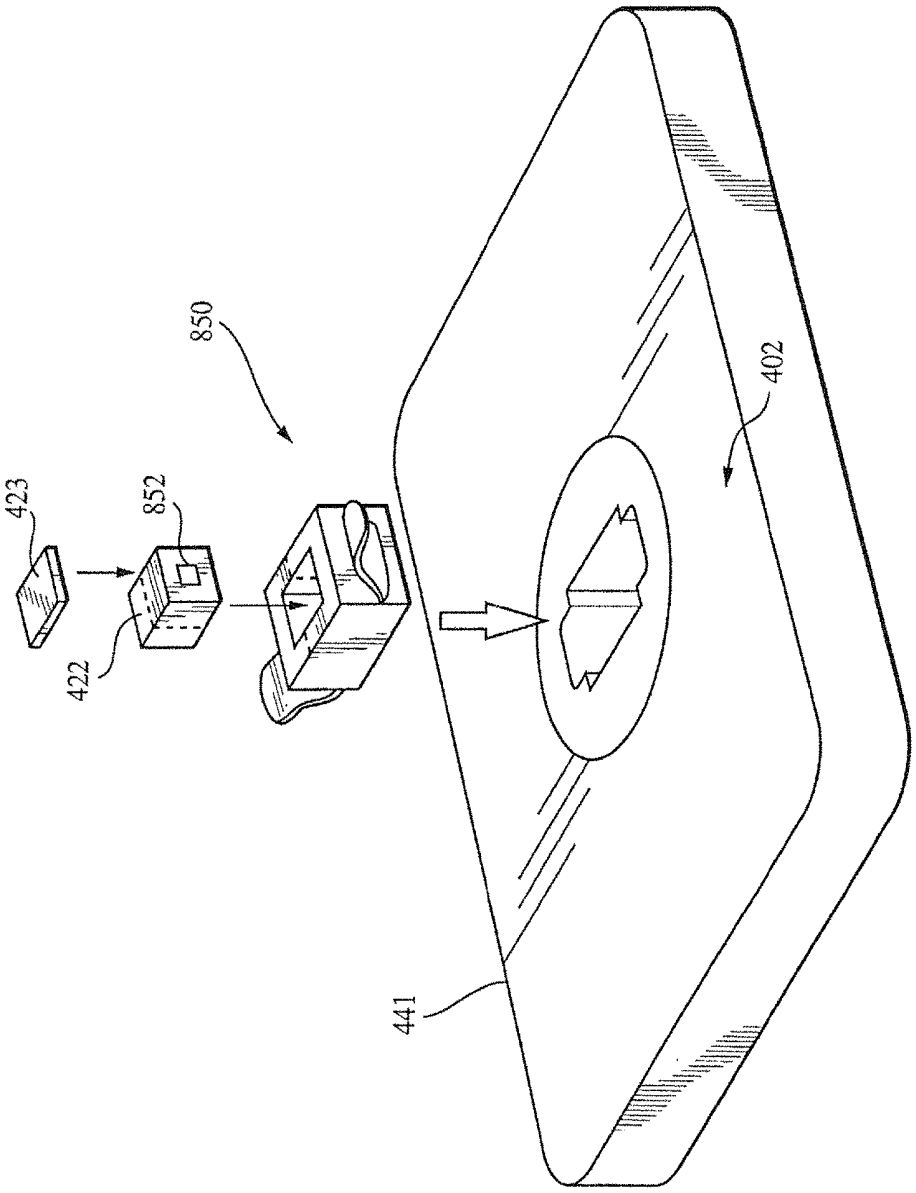

FIG. 8a

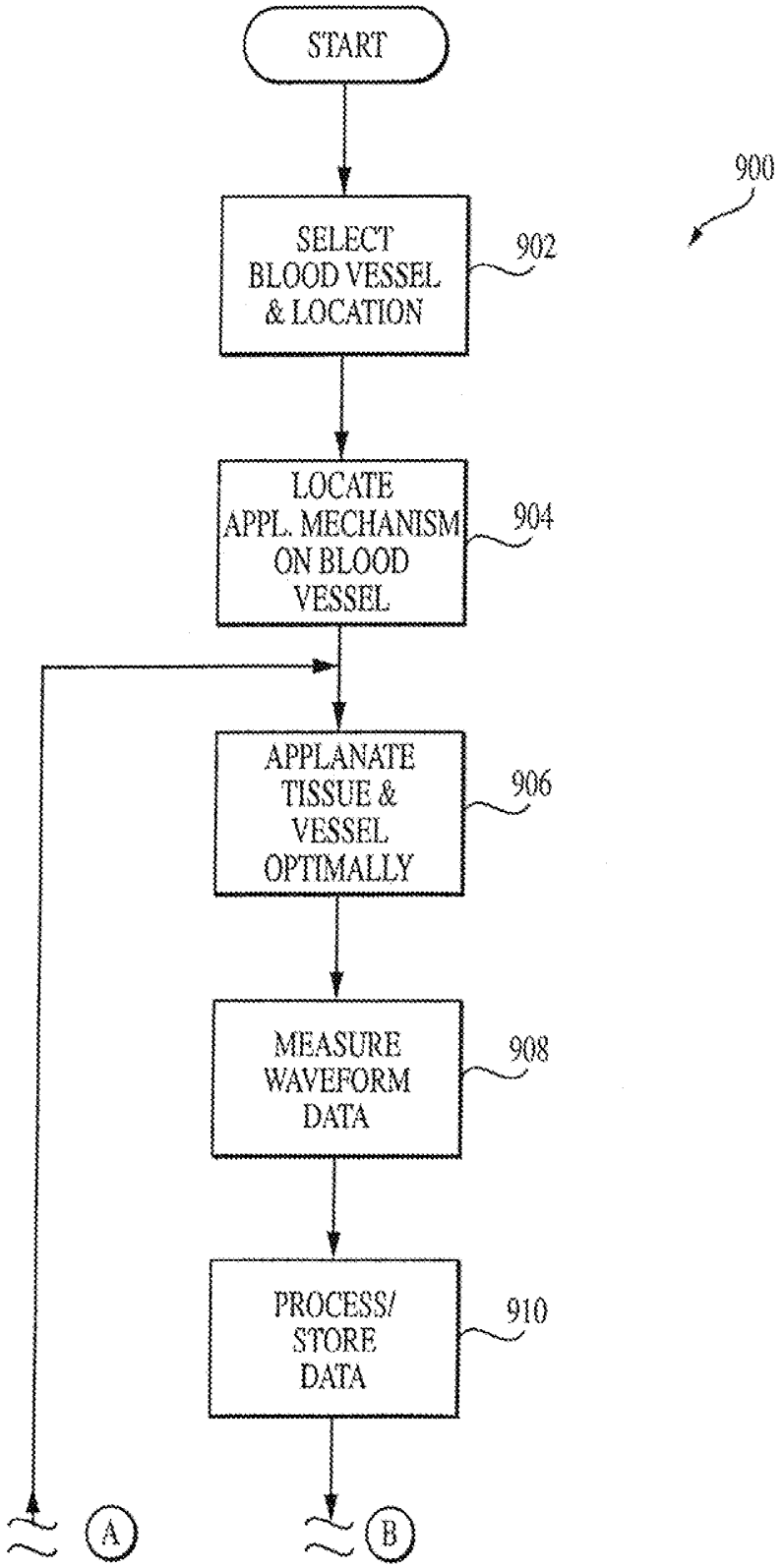
START
900
SELECT BLOOD VESSEL & LOCATION
902
LOCATE APPL. MECHANISM ON BLOOD VESSEL
904
APPLANATE TISSUE & VESSEL OPTIMALLY
906
MEASURE WAVEFORM DATA
908
PROCESS/ STORE DATA
910
A
B

FIG. 9

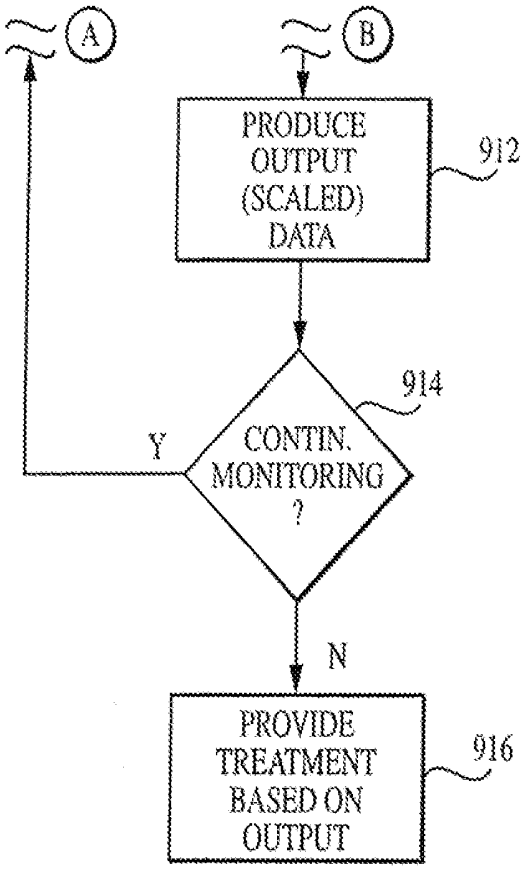

FIG. 9

(Continued)

METHOD AND APPARATUS FOR NON-INVASIVELY MEASURING HEMODYNAMIC PARAMETERS USING PARAMETRICS

This application is a continuation of and claims priority to co-owned U.S. patent application Ser. No. 12/987,928 filed on Jan. 10, 2011 of the same title, and issuing as U.S. Pat. No. 8,597,195 on Dec. 3, 2013, which is a continuation of and claims priority to co-owned U.S. patent application Ser. No. 10/838,404 filed on May 3, 2004 of the same title, and issued as U.S. Pat. No. 7,867,170 on Jan. 11, 2011, which is a continuation of and claims priority to co-owned U.S. patent application Ser. No. 10/072,508 filed on Feb. 5, 2002 also of the same title, and issued as U.S. Pat. No. 6,730,038 on May 4, 2004, each of the foregoing is incorporated herein by reference in its entirety.

BACKGROUND OF THE INVENTION

1. Field of the Invention

This invention relates generally to methods and apparatus for monitoring parameters associated with the circulatory system of a living subject, and specifically to the non-invasive monitoring of arterial blood pressure.

2. Description of Related Technology

The accurate, continuous, non-invasive measurement of blood pressure has long been sought by medical science. The availability of such measurement techniques would allow the caregiver to continuously monitor a subject's blood pressure accurately and in repeatable fashion without the use of invasive arterial catheters (commonly known as "A-lines") in any number of settings including, for example, surgical operating rooms where continuous, accurate indications of true blood pressure are often essential.

Several well known techniques have heretofore been used to non-invasively monitor a subject's arterial blood pressure waveform, namely, auscultation, oscillometry, and tonometry. Both the auscultation and oscillometry techniques use a standard inflatable arm cuff that occludes the subject's brachial artery. The auscultatory technique determines the subject's systolic and diastolic pressures by monitoring certain Korotkoff sounds that occur as the cuff is slowly deflated. The oscillometric technique, on the other hand, determines these pressures, as well as the subject's mean pressure, by measuring actual pressure changes that occur in the cuff as the cuff is deflated. Both techniques determine pressure values only intermittently, because of the need to alternately inflate and deflate the cuff, and they cannot replicate the subject's actual blood pressure waveform. Thus, true continuous, beat-to-beat blood pressure monitoring cannot be achieved using these techniques.

Occlusive cuff instruments of the kind described briefly above have generally been somewhat effective in sensing long-term trends in a subject's blood pressure. However, such instruments generally have been ineffective in sensing short-term blood pressure variations, which are of critical importance in many medical applications, including surgery.

The technique of arterial tonometry is also well known in the medical arts. According to the theory of arterial tonometry, the pressure in a superficial artery with sufficient bony support, such as the radial artery, may be accurately recorded during an applanation sweep when the transmural pressure equals zero. The term "applanation" refers to the process of varying the pressure applied to the artery. An applanation sweep refers to a time period during which pressure over the artery is varied from overcompression to undercompression or vice versa. At the onset of a decreasing applanation sweep, the artery is overcompressed into a "dog bone" shape, so that pressure pulses are not recorded. At the end of the sweep, the artery is undercompressed, so that minimum amplitude pressure pulses are recorded. Within the sweep, it is assumed that an applanation occurs during which the arterial wall tension is parallel to the tonometer surface. Here, the arterial pressure is perpendicular to the surface and is the only stress detected by the tonometer sensor. At this pressure, it is assumed that the maximum peak-to-peak amplitude (the "maximum pulsatile") pressure obtained corresponds to zero transmural pressure.

One prior art device for implementing the tonometry technique includes a rigid array of miniature pressure transducers that is applied against the tissue overlying a peripheral artery, e.g., the radial artery. The transducers each directly sense the mechanical forces in the underlying subject tissue, and each is sized to cover only a fraction of the underlying artery. The array is urged against the tissue, to applanate the underlying artery and thereby cause beat-to-beat pressure variations within the artery to be coupled through the tissue to at least some of the transducers. An array of different transducers is used to ensure that at least one transducer is always over the artery, regardless of array position on the subject. This type of tonometer, however, is subject to several drawbacks. First, the array of discrete transducers generally is not anatomically compatible with the continuous contours of the subject's tissue overlying the artery being sensed. This has historically led to inaccuracies in the resulting transducer signals. In addition, in some cases, this incompatibility can cause tissue injury and nerve damage and can restrict blood flow to distal tissue.

Other prior art techniques have sought to more accurately place a single tonometric sensor laterally above the artery, thereby more completely coupling the sensor to the pressure variations within the artery. However, such systems may place the sensor at a location where it is geometrically "centered" but not optimally positioned for signal coupling, and further typically require comparatively frequent recalibration or repositioning due to movement of the subject during measurement.

Tonometry systems are also commonly quite sensitive to the orientation of the pressure transducer on the subject being monitored. Specifically, such systems show a degradation in accuracy when the angular relationship between the transducer and the artery is varied from an "optimal" incidence angle. This is an important consideration, since no two measurements are likely to have the device placed or maintained at precisely the same angle with respect to the artery. Many of the foregoing approaches similarly suffer from not being able to maintain a constant angular relationship with the artery regardless of lateral position, due in many cases to positioning mechanisms which are not adapted to account for the anatomic features of the subject, such as curvature of the wrist surface.

Another significant drawback to arterial tonometry systems in general is their inability to continuously monitor and adjust the level of arterial wall compression to an optimum level. Generally, optimization of arterial wall compression has been achieved only by periodic recalibration. This has required an interruption of the subject monitoring function, which sometimes can occur during critical periods. This disability severely limits acceptance of tonometers in the clinical environment.

One of the most significant limitations of prior art tonometry approaches relates to incomplete pressure pulse transfer from the interior of the blood vessel to the point of mea-

surement on the surface of the skin above the blood vessel. Specifically, even when the optimum level of arterial compression is achieved, there is incomplete and often times complex coupling of the arterial blood pressure through the vessel wall and through the tissue to the surface of the skin, such that the magnitude of pressure variations actually occurring within the blood vessel is somewhat different than that measured by a tonometric sensor (pressure transducer) placed on the skin. Hence, any pressure signal or waveform measured at the skin necessarily differs from the true pressure within the artery. Modeling the physical response of the arterial wall, tissue, musculature, tendons, bone, skin of the wrist is no small feat, and inherently includes uncertainties and anomalies for each separate individual. These uncertainties and anomalies introduce unpredictable error into any measurement of blood pressure made via a tonometric sensor. FIGS. **1** and **2** illustrate the cross-section of a typical human wrist, illustrating the various components and their relationships during normal (uncompressed) and applanated (compressed) states.

FIG. **3** graphically illustrates the foregoing principles, specifically the variability in the tonometric measurements relative to the invasive "A-line" or true arterial pressure. FIG. **3** shows exemplary tonometric pulse pressure (i.e., systolic minus diastolic pressure) data obtained during applanation of the subject's radial artery to the mean pressure. FIG. **3** demonstrates the differences between the pulse pressures measured with the non-invasive prior art tonometric apparatus and the invasive A-Line catheter; note that these differences are generally neither constant nor related to the actual pulse pressure. Hence, there can often be very significant variance in the tonometrically-derived measurements relative to the invasive catheter pressure, such variance not being adequately addressed by prior art techniques.

Based on the foregoing, there is needed an improved methodology and apparatus for accurately, continuously, and non-invasively measuring blood pressure within a living subject. Such improved methodology and apparatus would ideally allow for continuous tonometric measurement of blood pressure which is reflective of true intra-arterial (catheter) pressure, while also providing robustness and repeatability under varying patient physiology and environmental conditions. Such method and apparatus would also be easily utilized by both trained medical personnel and untrained individuals, thereby allowing certain subjects to accurately and reliably conduct self-monitoring.

SUMMARY OF THE INVENTION

The present invention satisfies the aforementioned needs by an improved method and apparatus for non-invasively and continuously assessing hemodynamic properties, including arterial blood pressure, within a living subject.

In a first aspect of the invention, an improved method of obtaining a pressure signal obtained from a blood vessel of a living subject using parametric scaling is disclosed. The method generally comprises applanating a portion of tissue proximate to a blood vessel to achieve a desired condition, and measuring the pressure associated with the blood vessel non-invasively. The measured pressure may then be optionally scaled using parametric data obtained from the subject (or other subjects, for example, on a statistical basis). In one exemplary embodiment of the method, the portion of the tissue (e.g., that proximate to and effectively surrounding the blood vessel of interest) is applanated or compressed to a level which correlates generally to the maximum pulse pressure amplitude for the blood vessel. This greatly minimizes the error between the true intra-vessel pressure and the tonometric reading. The tonometric reading is then optionally scaled (adjusted) for any remaining error based on parametric data comprising the body mass index (BMI) and pulse pressure (PP) for the subject being evaluated. In certain cases, such as those where there is little error or transfer loss resulting from the tissue interposed between the blood vessel wall and tonometric transducer, little or no scaling is needed. In other cases (e.g., where the transfer loss is significant), scaling of the tonometric pressure reading may be appropriate. In one exemplary variant of the method, discrete ranges of parametric data (e.g., BMI/PP) are established such that a given range of data correlates to a unitary (or deterministic) scaling factor or set of factors.

In another exemplary embodiment, a ratio of the BMI to wrist circumference (WC) is formed, and appropriate scaling applied based thereon.

In a second aspect of the invention, an improved apparatus for applanating tissue to provide non-invasive blood pressure measurements is disclosed. The apparatus comprises an applanation element adapted to apply a level of applanation or compression to the tissue proximate to the blood vessel while also measuring pressure tonometrically. In one exemplary embodiment, the applanation element comprises a substantially rectangular pad having an aperture centrally located therein. The aperture is a cylindrical shape having one or more pressure transducers disposed therein and set to a predetermined depth with respect to the contact surface of the pad. A drive mechanism is connected to the element to allow varying levels of force to be applied to the tissue. One or more stepper motors with position encoders are employed to permit precise positioning of the applanation element with respect to the blood vessel/tissue.

In a third aspect of the invention, an improved method for locating the optimal applanation for measuring a hemodynamie parameter is disclosed. The method generally comprises varying the position of the aforementioned applanation element relative to the blood vessel such that varying hemodynamic conditions within the blood vessel are created over time. The optimal level of applanation for the element is then determined by analyzing data obtained tonometrically from the blood vessel (i.e., the overlying tissue), the optimal level subsequently being established to monitor the selected parameter. In one exemplary embodiment, the hemodynamic parameter comprises arterial blood pressure, and the applanation element is varied in position with respect to the blood vessel so as to create a progressively increasing level of compression (so-called "applanation sweep"). The optimal applanation occurs where the highest or maximum pulse pressure is observed. An algorithm is used to iteratively analyze the pressure waveform obtained during the sweep and identify the optimum (maximum pulse pressure) point. The applanation level is then adjusted or "servoed" around that maximal point, where additional measurement and processing occurs. Optionally, the foregoing methodology may be coupled with optimization routines and positional variations associated with one or more other dimensions (e.g., lateral, proximal, and angle of incidence with respect to the normal, for the human radial artery), such that all parameters are optimized, thereby providing the most accurate tonometric reading.

In a fourth aspect of the invention, an improved method for scaling the blood pressure measurements obtained from a living subject is disclosed. The method generally comprises: determining at least one physiologic parameter of the subject; forming a relationship between the at least one parameter and a scaling function; and using the scaling

function to scale raw (i.e., unsealed) blood pressure data. In one exemplary embodiment, the blood pressure measurements are obtained from the radial artery of the subject, and two physiologic parameters are utilized: the first parameter comprises the body mass index (BMI) of the subject, and the second parameter the tonometrically measured pulse pressure (PP). An index or ratio of the BMI to the PP is then formed. This index is compared to a predetermined set of criteria relating the index value to the required scaling factor to be applied to the raw blood pressure data. The scaling criteria may be either discrete (e.g., multiple index "bands" having a different scaling factor associated therewith) or continuous in nature. The required scaling can be accomplished automatically (such as via a look-up table, algorithm or similar mechanism in the system software), or alternatively manually, such as via a nomograph, graph, or table.

In a second embodiment, the BMI is related to the wrist circumference of the subject as determined from the subject. In yet another embodiment, the body fat content of the subject is used to develop a scaling function.

In a fifth aspect of the invention, an improved computer program for implementing the aforementioned methods is disclosed. In one exemplary embodiment, the computer program comprises an object code representation of a C^{++} source code listing, the object code representation being disposed in the program memory or similar storage device of a microcomputer system. The program is adapted to run on the microprocessor of the microcomputer system. One or more subroutines for implementing the applanation optimization and scaling methodologies described above are included within the program. In a second exemplary embodiment, the computer program comprises an instruction set disposed within the storage device (such as the embedded program memory) of a digital processor.

In a sixth aspect of the invention, an improved non-invasive system for assessing one or more hemodynamic parameters is disclosed. The system includes the aforementioned applanation apparatus, along with a digital processor and storage device. In one exemplary embodiment, the apparatus comprises a pressure transducer disposed in the applanation element which is used to applanate the radial artery of a human. The processor is operatively connected to the pressure transducer and applanation apparatus, and facilitates processing signals from the pressure transducer during blood pressure measurement, as well as control of the applanation mechanism (via a microcontroller). The processor further includes a program memory (such as an embedded flash memory) with the aforementioned algorithm stored therein in the form of a computer program. The storage device is also coupled to the processor, and allows for storage of data generated by the pressure transducer and/or processor during operation. In one exemplary variant, the apparatus further includes a second storage device (e.g., EEPROM) which is associated with the transducer and removably coupled to the apparatus, such that the transducer and EEPROM may be easily swapped out by the user. The removable transducer/EEPROM assembly is pre-configured with given scaling data which is particularly adapted for subjects having certain parametrics (e.g., BMI within a certain range). In this fashion, the user simply evaluates the parametrics, and selects the appropriate assembly for use with the apparatus. The apparatus supplies an appropriate value of PP (e.g., a "corrected" value derived from recently obtained data), thereby generating the BMI/PP ratio needed to enter the scaling function (e.g., lookup table). Once the appropriate scaling factor is selected, it is automatically applied to the unsealed pressure waveform. No other calibration or sealing is required, thereby substantially simplifying operation of the apparatus while allowing for highly accurate and continuous pressure readings.

In another exemplary variant, the second storage device is configured so as to carry a plurality of sealing factors/functions, the appropriate one(s) of which is/are selected at time of use through parametric data supplied to the apparatus.

In an seventh aspect of the invention, an improved method of providing treatment to a subject using the aforementioned methodologies is disclosed. The method generally comprises the steps of: selecting a blood vessel of the subject useful for measuring pressure data; applanating the blood vessel to an optimal level; measuring the pressure data when the blood vessel is optimally applanated; scaling the measured pressure data; and providing treatment to the subject based on this scaled pressure data. In one exemplary embodiment, the blood vessel comprises the radial artery of the human being, and the aforementioned methods of optimally applanating the blood vessel and scaling the pressure waveform using BMI/PP are utilized.

In an eighth aspect, a method for determining a substantially optimum location for applanating a blood vessel is disclosed. In one embodiment, the method comprises: (i) placing a transducer proximate to one side of a blood vessel at a starting position laterally offset from the substantially optimum location for applanating the blood vessel; (ii) automatically moving the transducer laterally over the blood vessel from the starting position to an ending position past the substantially optimum location for applanating the blood vessel on a second side of the blood vessel while simultaneously measuring a pulse pressure of the blood vessel via the transducer; and (iii) automatically moving the transducer laterally over the blood vessel from the ending position to place the transducer over the substantially optimum location.

In a ninth aspect, a method is disclosed. In one embodiment, the method comprises: (i) positioning a transducer laterally offset from a central portion of a blood vessel; (ii) automatically sweeping the transducer laterally over the blood vessel past the central portion while simultaneously measuring a pulse pressure of the blood vessel via the transducer; and (iii) automatically repositioning the transducer over the central portion of the blood vessel based at least in part on the pulse pressure measured during the act of sweeping.

In a tenth aspect, an apparatus for measuring blood pressure is disclosed. In one embodiment, the apparatus comprises: an applanator structure; a transducer coupled to the applanator structure, the transducer configured to indicate pressure of a blood vessel; and an actuator assembly coupled to the applanator structure and the transducer. The actuator assembly is further configured to laterally sweep the applanator structure and the transducer over the blood vessel and to vary an amount of applanation applied by the applanator structure and the transducer to the blood vessel.

These and other features of the invention will become apparent from the following description of the invention, taken in conjunction with the accompanying drawings.

BRIEF DESCRIPTION OF THE DRAWINGS

FIG. **1** is a cross-sectional diagram of the wrist area of an exemplary human subject, illustrating the radial artery and other tissue and structures, in an unapplanated (uncompressed) state.

FIG. **2** is a cross-sectional diagram or the wrist area of FIG. **1**, illustrating the effect of tonometric applanation on the radial artery and structures.

FIG. **3** is a graph illustrating the relationship between the tonometrically obtained pulse pressure and the corresponding invasive catheter (A-line) pulse pressure for a typical human subject when the radial artery is applanated to mean arterial pressure.

FIG. **4** is a side elevational view of one embodiment of the applanation apparatus of the present invention.

FIG. **4***a* is a plan view of the contact pad of the apparatus of FIG. **4**, illustrating the relationship between applanation element and pressure transducer.

FIG. **4***b* is a side cross-sectional view of a second embodiment of the contact pad, illustrating the use of multiple layers of material.

FIG. **4***c* is a bottom plan view of a third embodiment of the contact pad, illustrating the use of materials which vary as a function of radius from the center applanation element.

FIG. **4***d* is a side plan view of a fourth embodiment of the contact pad of the invention, illustrating the use of varying pad material thickness.

FIGS. **4***e*-**4***f* are bottom and side plan views, respectively, of a fifth embodiment of the contact pad of the invention.

FIGS. **4***g*-**4***h* are bottom and side plan views, respectively, of a sixth embodiment of the contact pad of the invention.

FIG. **5** is a logical flow diagram illustrating one exemplary embodiment of the general method of measuring blood pressure using optimized applanation and scaling according to the invention.

FIG. **5***a* is a logical flow diagram illustrating one method of scaling an unsealed tonometric waveform using body mass index and pulse pressure.

FIG. **5***b* is a graph illustrating a plurality of alternative applanation sweep profiles useful with the present invention.

FIG. **5***c* is a graph showing one exemplary method of identifying and eliminating noise artifact from a tonometric pressure waveform using an external signal.

FIG. **5***d* is a logical flow diagram illustrating one exemplary embodiment of the method of scaling hemodynamie measurements (using BMI and PP) according to the invention.

FIG. **5***e* is a graph showing the relationship between BMI/PP and error factor for radial artery data derived from a sample of human beings.

FIG. **5***f* is a graph showing the relationship between actual and uncorrected tonometric systolic pressure for the sample of FIG. **5***e*.

FIG. **5***g* is a graph showing the relationship between actual and uncorrected tonometric diastolic pressure for the sample of FIG. **5***f*.

FIG. **5***h* is a graph showing an exemplary "zero mean" tonometric pressure waveform before and after being corrected (scaled).

FIG. **5***i* is a logical flow diagram illustrating a second exemplary embodiment of the method of scaling hemodynamic measurements (using BMI and WC) according to the invention.

FIG. **6** is a graphical representation of a first embodiment of a nomograph useful for scaling blood pressure measurements according to the methodology of FIG. **5***h*.

FIG. **7** is logical flow diagram illustrating one exemplary method for laterally positioning the applanation apparatus of FIG. **4** according to the invention.

FIGS. **7***a*-**7***b* are graphs illustrating pulse pressure (PP) versus lateral position for the first and second lateral position sweeps of the method of FIG. **7**, including the relative location of the PP maxima therein.

FIG. **7***c* is a graph of PP versus lateral position illustrating a spurious artifact (pressure peak) due to motion of the subject during measurement.

FIG. **7***d* is a graph of PP versus lateral position illustrating a PP profile having no clear maximum.

FIG. **8** is a block diagram of one exemplary embodiment of the apparatus for measuring hemodynamic parameters within the blood vessel of a living subject according to the invention.

FIG. **8***a* is a side plan view of an exemplary unitary transducer/storage device assembly useful with the apparatus of FIG. **8**.

FIG. **9** is a logical flow diagram illustrating one exemplary embodiment of the method of providing treatment to a subject using the aforementioned methods.

DETAILED DESCRIPTION OF THE INVENTION

Reference is now made to the drawings wherein like numerals refer to like parts throughout.

It is noted that while the invention is described herein primarily in terms of a method and apparatus for assessment of hemodynamic parameters of the circulatory system via the radial artery (i.e., wrist) of a human subject, the invention may also be readily embodied or adapted to monitor such parameters at other blood vessels and locations on the human body, as well as monitoring these parameters on other warm-blooded species. All such adaptations and alternate embodiments are readily implemented by those of ordinary skill in the relevant arts, and are considered to fall within the scope of the claims appended hereto.

As used herein, the term "hemodynamic parameter" is meant to include parameters associated with the circulatory system of the subject, including for example pressure (e.g., diastolic, systolic, pulse, or mean pressure). The term "physiologic parameter" is meant to include measurements or quantities associated with the physiology subject, including for example the subject's weight, height, body mass index (BMI), wrist circumference, ankle circumference, or body fat content, but may also include one or more "hemodynamic" parameters previously defined herein (e.g., blood pressure, etc.).

Additionally, it is noted that the terms "tonometric," "tonometer," and "tonometery" as used herein are intended to broadly refer to non-invasive surface measurement of one or more hemodynamic parameters such as pressure, such as by placing a sensor in communication with the surface of the skin, although contact with the skin need not be direct (e.g., such as through a coupling medium or other interface).

The terms "applanate" and "applanation" as used herein refer to the compression (relative to a state of non-compression) of tissue, blood vessel(s), and other structures such as tendon or muscle of the subject's physiology. Similarly, an applanation "sweep" refers to one or more periods of time during which the applanation level is varied (either increasingly, decreasingly, or any combination thereof). Although generally used in the context of linear (constant velocity) position variations, the term "applanation" as used herein may conceivably take on any variety of other forms, including without limitation (i) a continuous non-linear (e.g., logarithmic) increasing or decreasing compression over time; (ii) a non-continuous or piece-wise continuous linear or non-linear compression; (iii) alternating compression and relaxation; (iv) sinusoidal or triangular waves functions; (v)

random motion (such as a "random walk"; or (vi) a deterministic profile. All such forms are considered to be encompassed by the term.

Lastly, the terms "processor" and "digital processor" are meant to include any integrated circuit or other electronic device (or collection of devices) capable of performing an operation on at least one instruction including, without limitation, reduced instruction set core (RISC) processors such as those manufactured by ARM Limited of Cambridge, UK, CISC microprocessors, central processing units (CPUs), and digital signal processors (DSPs). The hardware of such devices may be integrated onto a single substrate (e.g., silicon "die"), or distributed among two or more substrates. Furthermore, various functional aspects of the processor may be implemented solely as software or firmware associated with the processor.

Overview

In one fundamental aspect, the present invention comprises a method of accurately measuring one or more hemodynamic parameters using optimal applanation and scaling of raw or unsealed measurements. In general terms, such applanation mitigates transfer loss and other errors introduced by non-invasive (e.g., tonometric) measurement techniques as applied to the complex system of blood vessels, tissue, muscle, and skin at the location of measurement of the hemodynamic parameter. For example, as will be described in greater detail below, the present invention is useful for accurately measuring the blood pressure using a tonometric or surface pressure sensor disposed over the radial artery of a human being, the measured pressure waveform potentially varying substantially from that actually experienced within the radial artery itself. In one embodiment, a specially configured applanation (compression) apparatus is disclosed, wherein an applanation element is utilized to compress or bias the tissue and accordingly, the blood vessel contained therein. This applanation apparatus advantageously with associated pressure transducer may be used alone as described in detail herein, or in conjunction with literally any type of other apparatus adapted for hemodynamic parameter measurement, including for example the devices described in co-pending U.S. patent application Ser. No. 09/815,982 entitled "Method and Apparatus for the Noninvasive Assessment of Hemodynamic Parameters Including Blood Vessel Location" filed Mar. 22, 2001, and U.S. patent application Ser. No. 09/815,080 entitled "Method and Apparatus for Assessing Hemodynamic Parameters within the Circulatory System of a Living Subject" also filed Mar. 22, 2001, both of which are assigned to the assignee hereof and incorporated herein by reference in their entirety.

Since the signal under measurement (e.g. pressure) is time variant, iteration and optimization are selectively utilized within the algorithm embodying the methodology of the present invention to account for this variation. Specifically, the signal is time variant over the short period of the cardiac cycle, over the longer period of the respiratory cycle, and potentially over the even longer or shorter period of hemodynamic changes resulting from varying drug concentrations and volume changes. Accordingly, the algorithm described herein utilizes the aforementioned applanation mechanism to continually find and maintain the optimal level of applanation, thereby maintaining an environment conducive for accurate, continuous, and non-invasive parametric measurement.

It will further be noted that the optimal bias technique of the present invention can be used in conjunction with lateral (transverse), proximal, or other positioning techniques to help locate the pressure transducer(s) over the blood vessel of interest. To this end, any number of different positioning approaches may be employed either alone or in combination (where compatible). For example, the lateral positioning based on analysis of the pressure signal obtained by a tonometric sensor disposed generally over the blood vessel (described subsequently herein) may be utilized. Alternatively, the primarily acoustic lateral positioning and wall detection approaches described in the aforementioned co-pending applications may be used. As yet another alternative, manual location and positioning of the applanators and transducer over the selected blood vessel may be employed.

Applanation Apparatus for Pressure Measurement

Referring now to FIGS. **4**-**4***a*, a first embodiment of the applanation apparatus of the invention is described in detail.

The ability to accurately measure the pressure associated with a blood vessel depends largely upon the mechanical configuration of the applanation mechanism. Under the typical prior art approaches previously discussed, the pressure transducer comprises the applanation mechanism such that the mechanism and transducer are fixed as a single unit. Hence, the pressure transducer experiences the full force applied to deform the tissue, structures, and blood vessel. This approach neglects the component of the applantion force required to compress this interposed tissue, etc. as it relates to the pressure measured tonometrically from the blood vessel. Conversely, under no compression, the magnitude of the pressure within the blood vessel is attenuated or masked by the interposed tissue such that the pressure measured tonometrically is less than that actually existing in the vessel (so-called "transfer loss").

In contrast, the apparatus of the present invention embodies the pressure transducer disposed within an applanation element, the latter having a specially designed configuration adapted to mitigate the effects of such transfer loss in a simple, repeatable, and reliable way such that it can be either (i) ignored or (ii) compensated for as part of the tonometric measurement. As discussed in greater detail below, the shape, size, placement, and selection of materials for the applanation element can be important in determining the amount of transfer loss experienced under a given set of conditions. Specifically, these factors largely dictate the relationship between the maximum pulse pressure and the mean pressure, and hence ultimately the error associated with a given tonometric pressure reading.

As shown in the exemplary embodiment of FIG. **4**, the applanation element **402** is used to compress the tissue generally surrounding the blood vessel **404** of interest, and to apply force to the blood vessel wall so as to begin to overcome the wall or hoop stress thereof. The applanation element (or applanator) **402** is coupled to a drive motor **406** which provides the compressive applanating force **408** in reaction to the patient via a wristband or brace **410** (or an external surface). The applanator **402** of the illustrated embodiment includes a generally rectangular applanator body **414** with a substantially cylindrical projection **412** (see FIG. **4***a*), and a contact pad **441** disposed on the bottom surface thereof. The body **414** is molded from a polymer (e.g., polycarbonate) for ease of manufacturing, rigidity, and low cost, although other materials may be chosen. A substantially cylindrical aperture **415** is formed centrally in the contact pad **441** to receive the body projection **412**. Accordingly, when the contact surface **440** of the applanator pad **441** is pressed against the skin of the patient, a generally rectangular contact area ("footprint") with a central aperture results.

A pressure transducer **422**, disposed substantially over the blood vessel **404** and received within an aperture **413** of the applanator body **414**, is used to obtain tonometric pressure readings from the surface of the skin (tissue) overlying the blood vessel. The height of the active face **420** of the transducer **422** is set within its housing **417** so as to provide the desired degree of coupling between the transducer face and tissue when the applanator **402** is compressed onto the subject's tissue. It will be recognized, however, that the transducer **422** or it's housing **417** may be made adjustable or movable within the aperture **413** so as to facilitate optimal positioning under different operating conditions and/or to accommodate different subject physiologies.

As shown in FIG. **4**, a thin polymer layer **423** is also applied over the top of the transducer face **420** so as to (i) couple the transducer face more positively to the tissue; and (ii) level the surface contacting the tissue formed by the transducer face, the body projection **412**, and the transducer housing **417**. Specifically, a layer of a pliable, compressible silicone based compound (e.g., silicone rubber) is formed over the transducer face **420** within the housing **417** as shown, although other materials may be used. In addition to its superior physical properties and excellent pressure signal coupling from the tissue to the transducer face **420**, the silicone layer **423** also allows for some degree of variation in the distance between the transducer face and the top surface **419** of the housing **417** during manufacture, since the silicone is "filled" to the appropriate depth to provide a level and effectively continuous top surface.

The motor **406** of the applanator assembly is, in the present embodiment, rigidly coupled to the wrist brace assembly **410** so as to provide a substantially invariant platform against which the motor may exert reaction force while applanating the subject's tissue. This "rigid" configuration is utilized so as to avoid any significant compliance of the assembly as the motor **406** drives the contact pad **441** in compression of the tissue/blood vessel during applanation. This rigidity is advantageous from the standpoint that helps allow the pressure transducer **422** to record the maximum value of pulse pressure (or other selected parameter); greater degrees of compliance in the mechanism tend to reduce the magnitude of the peak pressure observed, thereby potentially making the identification of the pulse pressure peak more difficult.

It will be recognized, however, that alternate configurations having at least some degree of compliance may be utilized in some applications. For example, in one alternate embodiment, a rigid coupling of the applanator assembly to the wrist brace **410** is used; however, a somewhat flexible applanator body **414** with a curved interior surface (not shown) that can adapt to the curvature of the subject's wrist may be utilized. In this fashion, the coupling remains rigid, but the applanator body complies in a limited fashion to the subject's wrist curvature, thereby allowing for a substantially uniform level of contact across a broader portion of the wrist. The degree of compliance of the body **414** is controlled by its flexural strength; i.e., the level of force needed to incrementally deform the body increases as a function of its compliance or "bending", thereby effectively limiting its total compliance, and causing the contact pad **441** mated thereto to preferentially compress after a certain degree of deformation occurs. Other alternatives readily fashioned by those of ordinary skill may be used as well.

Advantageously, any number of different wrist brace configurations may be used consistent with present invention. For example, the brace disclosed in Assignee's copending U.S. patent application Ser. No. 09/815,982 previously incorporated herein by reference may be used. Other configurations may also be substituted with equal success, such configurations being readily fashioned by those of ordinary skill in the mechanical arts.

This foregoing flexibility in wrist brace configuration also underscores another benefit of the present invention, specifically that the aforementioned applanation mechanism (and associated technique described in detail below) is somewhat less sensitive to variations in attitude of the applanator and pressure transducer relative to the surface of the subject's skin than prior art techniques and apparatus. This comparative insensitivity relates in part due to the fact that pressure is coupled through the tissue and blood vessel wall over a fairly broad range of arc with respect to the longitudinal axis of the blood vessel, such that angular misalignment (i.e., angles of pressure transducer incidence which depart from a vector normal to the skin's surface at the point of measurement) has less effect. Furthermore, since the first applanation element **402** contacts a broad area of tissue around the blood vessel and compresses/distorts it to some degree, some angular misalignment or rotation of the applanation element contact surface **440** with respect to the skin surface can be tolerated.

The contact pad **441** of the applanation element **402** is formed in the present embodiment of a compressible, pliable foam-like cellular urethane material marketed by Rogers corporation as Poron™, although other materials with similar qualities may be used in conjunction with or in place of the Poron disclosed herein. Poron has, among other properties, a desirable durometer characteristic which is well adapted to the present application. The contact pad **441** is made approximately 0.25 in. (6.35 mm) thick, although other thicknesses may be used. The Assignee hereof has noted during various field trials that the Poron material provides excellent physical properties with respect to the compression of the subject's tissue and blood vessel, thereby very effectively mitigating the aforementioned transfer losses associated with these structures. Additionally, the contact pad **441** of the present embodiment is made replaceable by the user/subject so as to permit maintenance of a hygienic (or even sterile) environment. For example, the pad **441** may be replaced for each use, along with replacement of the pressure transducer assembly, or for each different subject if desired. The use of a low cost polymer advantageously makes the cost of maintaining the device quite low.

It will further be appreciated that while the contact pad **441** described above and showed in FIG. **4***a* is made of both substantially constant thickness and uniform material composition, either of these parameters may be varied for specific applications. For example, the pad **441** can be constructed using a multi-layer or "sandwich" approach, with the physical properties of the various layers being varied so as to provide certain properties for the overall pad assembly. In one embodiment, a two-layer pad (FIG. **4***b*) having different compression constants for each layer is used to provide a progressively varying compression of the pad; e.g., one layer of material will preferentially compress first, followed by the second layer when the incremental compression force of the first layer exceeds that of the second layer. In another embodiment, the material properties are varied in a generally radial direction with respect to the center aperture so as to provide varying rates of compression as a function of radius from the contact point with the tissue overlying the blood vessel (FIG. **4***c*). In yet another embodiment (FIG. **4***d*), the thickness of the pad is varied as a function of spatial position so as to provide varying rates of tissue compression.

Based on the foregoing, it will be appreciated that the configuration of the pad **441** may be "tuned" as needed to accomplish specific rates of tissue compression and/or provide other desired performance attributes. The design and fabrication of such alternate embodiments is well known to those of ordinary skill in the mechanical and materials arts, and accordingly is not described further herein.

Additionally, while the embodiments of FIGS. **4**-**4***d* comprise a substantially planar, rectangular pad **441** with a centrally located aperture having a circular cross-section, it will be recognized that other shapes and/or configurations may be used. For example, as shown in the embodiment of FIGS. **4***e*-**4***f*, the pad **451** of the applanation element comprises a circular cross-sectional shape with a slight concave arc formed in the contact surface **450** such that the pad conforms to the interior surface of the wrist **455**. As yet another alternative (FIGS. **4***g*-**4***h*), the applantion element pad may be configured a set of discrete lateral pads **460** disposed on either side of a multi-element array **463** of pressure transducers **464**. Myriad other combinations of applanator shapes, sizes, footprints, planarities, and configurations may be used consistent with the present invention, all such combinations falling within the scope of the claims appended hereto.

The motors **406** used in the illustrated embodiment of FIG. **4** to drive the applanation element **402** is a precision "stepper" motor of the type well known in the motor arts. This motor also includes one or more position encoders (not shown) which provide an electrical signal to the host system processor and associated algorithm to very precisely control the position of the applanation element during operation. Accordingly, as described in greater detail below, the variable used in the present embodiment to represent applanation element position is the number of motor steps (positive or negative relative to a "zero" point); this approach advantageously removes the need to measure the absolute position with respect to the subject's tissue or anatomy. Rather, the relative number of steps is measured via the position encoder, and this is effectively correlated to pressure measurement obtained from the pressure transducer(s).

A detailed discussion of the electronic and signal processing apparatus used to support the operation of the applanation mechanism **400** of FIG. **4** is provided with respect to FIG. **7** below.

Methodology

Referring now to FIG. **5**, the general methodology of optimally applanating or compressing the blood vessel and local tissue utilizing the previously described apparatus is described in detail.

As previously discussed, one fundamental concept of the present invention (and hence the methodology presented below) is to control the applanation element **402** such that the transfer loss associated with the tissue and structures surrounding the blood vessel is mitigated during measurement. In the case of the human radial artery, the transfer loss is effectively mitigated at that level of applanation where the tonometrically measured pulse pressure is maximized. Too little compression, and the coupling between the blood vessel wall and tissue surface (and hence transducer active surface) is incomplete, yielding tonometric pressure values which are significantly in error. Too much compression, and the vessel wall collapses, thereby distorting the cross-sectional shape of the vessel significantly, and again producing high levels of error. The optimal condition is to couple the vessel wall through the interposed tissue as completely as possible without otherwise affecting the hemodynamics of the vessel itself.

As shown in FIG. **5**, the first step **502** of the method **500** comprises placing the applanation mechanism **400** in the position with respect to the subject's blood vessel. Such placement may be accomplished manually, i.e., by the caregiver or subject visually aligning the transducer and device over the interior portion of the wrist, by the pressure/electronic/acoustic methods of positioning previously referenced, or by yet other means. Ideally, the applanation element **402** and its contact pad will be comfortably situated transversely over the interior of the wrist, with the transducer element **422** directly overlying the radial artery with little or no inclination with respect thereto. The element **402** and transducer **422** may be laterally aligned (step **504**) and proximally aligned (step **506**) if required. In one exemplary embodiment, the tonometrically measured pressure signal obtained from the transducer **422** may be used as a basis for such lateral/proximal positioning, in a manner similar to that used for determining optimal applanation level (described in detail below).

Once the applanation element **402** is suitably located and oriented, the element **402** is operated per step **508** so as to applanate the tissue surrounding (and at least partly overlying) the blood vessel to a desired level so as to identify an optimal position where the effects of transfer loss and other errors associated with the tonometric measurement are mitigated. Specifically, as shown in the embodiment of FIG. **5***a*, an applanation sweep is commenced (step **530**) using the motor **406** driving the element **402**, thereby progressively increasing the pressure applied to the tissue by the contact pad **441**. During this sweep, the pressure waveform obtained from the transducer **422** is analyzed on an interval (e.g., per-beat) basis per step **532** so as to determine the value of pulse pressure for that interval. Such calculations are generally accomplished within such a short duration (owing largely to the signal processing apparatus described below with respect to FIG. **7**) with respect to the rate of change of applanation such that the necessary calculations can be made "on the fly" during the applanation sweep. Certain artifacts or conditions existing within the waveform are identified (step **534**), thereby indicating that the desired level of applanation has been reached. For example, in the embodiment of FIG. **5***a*, the pulse pressures are calculated for each contiguous heart beat interval. "Peak-to-trough" amplitude values of the waveform for each interval are determined as part of this calculation in the present embodiment, although other quantities and/or portions of the waveform may be utilized. Where the calculated pulse pressure decreases below a certain percentage (e.g., 50%) of a prior beat for a designated number of beats (e.g., two), a pulse pressure "maximum" is declared, and level of applanation is reduced back to that corresponding to the prior beat interval where pulse pressure was maximized (step **510** of FIG. **5**).

The coarse positioning of the applanation element **402** back to the position of maximum pulse pressure is accomplished in one embodiment using the motor position recorded during the applanation sweep (e.g., at a given number of motor steps which corresponds to the level of arterial applanation or compression where maximum pulse pressure was detected). Once the coarse position is obtained and the applanator returned to this position, the system then is permitted to "settle" for a period of time, and an iterative "search" approach is utilized to vary the position of the applanation motor and element in each direction; i.e., more applanation and less applanation, while monitoring mean pressure as determined from the pressure transducer **422** (and supporting circuitry). A "maximum" detection routine is utilized as part of this iterative movement to verify that in

fact the maximum point has been achieved and, if required, move the applanation element to that point from the current position. It is noted that while the motor position or similar indicia corresponding to the maximum pulse pressure is generally a good "coarse" positioning determinant, other factors (physiologic and otherwise) may cause the level of optimal applanation to vary somewhat, thereby necessitating the maximum detection routine referenced above for best results. However, depending on the level of accuracy desired, the "coarse" repositioning criteria may be used alone if desired.

It will be recognized that a variety of different applantion sweep profiles may be employed as part of the foregoing steps. Specifically, the simplest profile is probably the straight linear rate sweep, wherein the applanation element drive motor **406** is controlled by the system controller (described below) to move the applanation element at an effectively constant rate (e.g., 5000 motor steps/min). This produces a non-linear application of force or bias to the tissue being compressed, since more force will be required to compress the tissue as it is nearing full compression as opposed to the onset of applanation. As another alternative, the applantion sweep may be step-wise linear; i.e., a contiguous set of mini-sweeps of constant rate punctuated by finite pause periods of no motion. This approach may be useful where significant signal processing or other data processing/acquisition is required during the applanation sweep.

As yet another alternative, the rate of applanation may be made deterministic. For example, in one alternative embodiment, the rate is coupled to the patient's heart rate, which is determined either directly by the hemodynamic measurement system (i.e., extracted from the pressure waveform measured by the pressure transducer **422** through signal processing), or by another apparatus (such as an electrocardiographic device adapted to analyze the QRS complexes of the heart). Specifically, in one embodiment using the indigenous determination via the measured pressure waveform, the extracted heart rate is entered into a linear equation of the form $y=mx+b$, such that for a high subject heart rate, the rate of applantion is set proportionately high, and vice versa. Clearly, however, non-linear functions may be substituted if desired. FIG. **5***b* graphically illustrates a number of the foregoing alternatives.

Additionally, other deterministic quantities may be used as the basis for the applanation rate determination. For example, the values of systolic and/or diastolic blood pressure (or derivations thereof) may be used as inputs to an applanation rate equation. Myriad other variants may also be used, either alone or in combination, so as to best select the proper applanation rate under varying subject physiologic conditions.

Next, per step **512** of the method **500** of FIG. **5**, the desired pressure value(s) are measured and stored in the system's storage device, discussed below, while the applanation is set at (or servoes around) that point where pulse pressure is maximized. For example, in one embodiment, the systolic and diastolic waveforms are extracted from the pressure transducer output signal. It is noted that in the case of the exemplary human radial artery, the point of applanation at which maximum pulse pressure occurs correlates strongly to mean arterial blood pressure, with the degree of correlation being affected to some degree by the shape, size, footprint, compliance, and other properties of the contact pad **441** previously described herein with respect to FIG. **4**.

Next, in step **514**, the measured values of the hemodynamic values (e.g., pressure) are optionally scaled or corrected for transfer loss as appropriate. It will be recognized that not every measured value will need to be scaled, and in some cases no scaling will be required. This result stems from the fact that (i) different individuals have different physiologic features and construction, thereby allowing the transfer loss associated with one individual to be markedly different from another; and (ii) the magnitude of the transfer loss (and hence the error in the tonometric measurement as compared to the actual intra-vascular pressure) may be small so as to be inconsequential. As will be described in subsequent discussion herein, there is a strong correlation between the magnitude of the transfer loss for a given individual and their body mass index (BMI), thereby allowing the present invention to, inter alia, "intelligently" scale the raw measured hemodynamic parameters.

It is noted that the present invention may also utilize the heart rate signal provided by the aforementioned ECG or other external device as a synchronization signal to aid in identifying artifacts or other features in the tonometrically obtained pressure waveform. Specifically, since the ECG (or other) non-indigenous measurement technique used may not be subject to non-physiologic noise (e.g., movement by the patient, vibration of the treatment facility, low-frequency AC noise, etc.), artifacts present in the pressure waveform can be mapped against the external signal for purposes of correlating and eliminating such artifacts. For example, as is well known, the aforementioned ECG technique uses electrical signals relating to the QRS complex of the subject's heart for measuring heart rate; the ECG waveform will therefore register QRS complexes at the interval they are generated by the subject's heart, largely irrespective of motion artifact or other noise. Hence, wherein the tonometric pressure waveform will display motion artifact (such as the gurney on which the subject is lying being inadvertently kicked by someone administering treatment, or the ambulance in which the subject is riding traversing a rough patch of road) to some degree, such artifacts will generally be absent from the ECG signal. The present invention optionally maps the two signals coincident in the temporal dimension using the digital processor described below with respect to FIG. **7**, and examines the signals at a predetermined rate and interval (e.g., a moving 100 ms window every 100 ms), or upon the occurrence of a predetermined event (e.g., ECG QRS amplitude exceeding a given threshold) to determine whether an observed pressure transient should be included in the data collected for that period, or discarded as a spurious noise transient or motion artifact. In one exemplary embodiment (FIG. **5***c*), the ECG wavefoim is monitored for the detection of each heart beat; a windowing function f(t) is applied to the tonometrically obtained waveform data to effectively block out pressure transients occurring outside the specified temporal window, which is centered on the ECG-detected "beat". Hence, only those artifacts which are coincident with heart beats as detected by the ECG will be included in the subsequent signal processing of the tonometric waveform. Assuming a random distribution of noise/artifact, the great majority of such noise/artifact will be eliminated from the pressure waveform using such a technique.

It will be appreciated, however, that other functions and approaches to correlating the external signal (ECG or otherwise) and the tonometric waveform may be used. For example, rather than a windowing approach which has two discrete states (i.e., discard or not discard), more sophisticated signal processing and filtration algorithms adapted to selectively identify noise/artifact and remove it from the waveform "on the fly" may be employed. Such algorithms

are well known to those of ordinary skill in the signal processing arts, and accordingly are not described further herein.

BMI/Pulse Pressure (PP) Scaling

Referring now to FIGS. **5***d*-**5***h*, one exemplary embodiment of the methodology for scaling or correcting raw or unsealed hemodynamic data obtained using the methodology of FIG. **5** described above. It will be recognized that while the embodiment of FIGS. **5***d*-**5***h* is described in terms of an algorithm such as would be utilized in conjunction with a digital computer system having a microprocessor or signal processor, the method of the present invention may be partially or even entirely practiced independent of such an algorithm or computer system. For example, portions of the algorithm may be accomplished via hardware (such as gate logic embodied in an ASIC or FPGA), or even manually via direct or indirect control of the operator. Accordingly, the exemplar of FIGS. **5***d*-**5***h* is merely illustrative of the broader concepts.

As illustrated in FIG. **5***d*, the method of scaling **514** generally comprises first determining a first physiologic parameter of the living subject under evaluation (step **540**). For the sake of illustration, the method **514** is described in terms of the scaling of a tonometrically obtained blood pressure measurement obtained from the radial artery of a human being, although it will be appreciated that the method may be employed at other monitoring locations on the same or different species. The first parameter obtained in this exemplary embodiment comprises a body mass index (BMI) of the type well known in the medical arts. Specifically, the BMI comprises:

$$\mathrm{BMI}=W/H^2 \qquad \text{(Eqn. 1)}$$

where:

BMI=Body mass index (Kg/m)

W=Subject weight (kgf)

H=Subject height (m)

Typical BMI values for the human species range from about 15 Kg/m^2 up to roughly 50 Kg/m^2, although values outside this range may occur. The values of subject weight (W) and height (H) are readily obtained using conventional measurement techniques not described further herein.

Next, a second physiologic parameter of the same subject is determined in step **542**. In the method embodiment of FIGS. **5***d*-**5***h*, the pulse pressure (i.e., the systolic pressure minus the diastolic pressure) is used in conjunction with the body mass index (BMT) of the subject to generate a corrected pulse pressure.

FIG. **5***e* illustrates the relationship (based on empirical data derived by the Assignee hereof, discussed in greater detail below) between the ratio of BMI to tonometrically measured pulse pressure (PP) and the error factor (percentage error between tonometrically derived pressure reading, and the actual intravascular pressure as determined by A-line invasive catheter). As shown in FIG. **5***e*, the relationship between error and BMI/PP is well grouped and substantially linear for the data presented, the latter spanning a broad range of BMI/PP values.

FIG. **5***e* is significant from the standpoint that it provides a description of the behavior of error as a function of certain selected physiologic parameters (e.g., BMI and PP). This description allows the present invention to apply the appropriate level of scaling to the tonometric pressure measurements to correct for transfer loss and related errors present in these measurements. As shown in FIG. **5***e*, the losses (as reflected by the error factor) at low BMI/PP values are low, and increase (linearly) as BMI/PP increases. In practical terms, persons with high BMI for the same PP value will require more transfer loss correction, which intuitively follows from the observation that such people commonly have a greater mass of tissue (skin, fat, muscle, tendon, etc.) interposed between the radial artery and surface of the skin on the interior of the wrist. Conversely, a very tall, thin person with average PP value will require little correction for transfer loss, which is also intuitively compelling.

FIGS. **5***f* and **5***g* illustrate the relationship between actual intravascular pressure (as measured, for example by an A-line) and tonometrically measured pressure for systolic and diastolic pressures, respectively, for the empirical data previously referenced. As shown in each of these figures, the data is tightly grouped along a functional line (here, modeled as linear). Stated differently, there are predictable functional relationships between the tonornetrically measured systolic and diastolic pressures and their corresponding actual intravascular values.

In the present embodiment, a linear relationship is also used to model the percentage error between the tonometric and actual intravascular pressures, as follows:

Where:

$$\%\ \mathrm{Error}=\frac{PP_T-PP_A}{PP_T}=M\cdot\frac{BMI}{PP_T}+b \qquad \text{(Eqn. 2)}$$

PP_T=pulse pressure (tonometric)

PP_A=pulse pressure (actual)

M=slope

b=intercept

Manipulating this equation, the following is obtained:

$$PP_T-PP_A=M\cdot\mathrm{BMI}+b\cdot PP_T \qquad \text{(Eqn. 3)}$$

$$PP_T-b\cdot PP_T-M\cdot\mathrm{BMI}=PP_A \qquad \text{(Eqn. 4)}$$

and

$$PP_T(1-b)-M\cdot\mathrm{BMI}=PP_A \qquad \text{(Eqn. 5)}$$

Eqn. 5 is the generalized relationship relating the actual intravascular pressure (PP_A) and the tonometric pressure (PP_T) based on BMI. Note that PPA (also referred to as the corrected pulse pressure, PP_C) is based on the current interval (e.g., beat), while PP_T is based on an average pulse pressure over the prior "n" pulses. Here, "n" can be any number (e.g., 10), or made deterministic such as being based on another quantity measured from the subject or otherwise derived in the calculation process if desired. Hence, in effect, the ratio PP_C/PP_T is the scale factor which is applied to subsequent samples of the tonometrically obtained pressure waveform. An "n" interval moving window is established, wherein the same scale factor is applied over each interval (beat).

Despite the use of a linear relationship in Eqn. 5 above (and the functions of FIGS. **5***f* and **5***g*), it will be appreciated that the relationship between the BMI/PP and error factor (or for that matter any other physiologic parameters or function thereof used for scaling) need not be linear or assume any prescribed form. For example, data collected on the population as a whole or subsets thereof (e.g., those within a specific BMI range) may be decidedly non-linear. Furthermore, other parametric relationships such as the BMI/WC approach described below may yield a non-linear function, which can be used as the basis for scaling. Alternatively, the function may be piecewise-continuous or even discontinuous. Myriad functional relationships therefore may be suc-

cessfully substituted and used consistent with the general premise of the present invention.

Returning to FIG. **5***d*, the corrected (scaled) pressure waveform is next derived per step **544**. In the present embodiment, this is determined by (i) subtracting the average "n" pulse tonometrically measured mean pressure from each subsequent tonometric sample value of pressure (a "zero mean" sample result) per step **546**; (ii) multiplying each "zero mean" sample value derived in (i) by the derived scale factor (step **548**), and adding back the "n" beat average mean pressure value (step **550**); and (iii) repeating the process every "n" beats, using a newly derived scale factor for every "n" beats (step **552**). The resultant waveform is a scaled waveform which is effectively corrected for transfer loss.

Note that the foregoing "zero mean" approach is used so as to zero or center the waveform around a known reference level (zero). In this fashion, systolic pressure measurements advantageously will always be above the zero mean, and diastolic pressure measurements always below. However, a non-zero mean (i.e., offset) or other reference point may be chosen if desired, such as any value between zero and the measured pressure mean. The zero-mean approach is merely an expedient convention to simplify analysis and make the results more intuitive to the user/operator. It will be appreciated that such value(s) may be chosen to facilitate computational efficiency, especially in more "thin" hardware environments where computational capacity of the host platform is minimal or at a premium. For example, a low cost (or even disposable) apparatus embodying the present invention may have a digital processor with very limited MIPS and/or memory; the mean or offset point can therefore be chosen so as to best optimize this limited capability.

It is also noted that the magnitude of error associated with the tonometric measurements described herein is always negative (FIG. **5***d* is entirely on the "negative" side of the error factor scale). This correlates to the tonometric pressure always being less than the actual intravascular pressure in magnitude due to transfer loss. When this fact is coupled with the "zero mean" technique described above, it results in tonometric systolic and diastolic pressure values which always must be increased in magnitude during scaling ("stretched up" for systolic, and "stretched down", as shown in FIG. **5***h*). As described in greater detail below with respect to FIG. **7**, the apparatus **700** of the present invention calculates a "stretch" value based on BMI and PP according to the previously discussed methodology which performs this stretching of the tonometric waveform so as to comply with the actual intravascular waveform.

The use of pulse pressure (PP) as a physiologic parameter in the present embodiment provides the further advantage of being derived from other variables measured by the pressure transducer. That is, PP is derived by a mathematical manipulation of the systolic and diastolic pressure values at any given time (or over a predetermined interval); accordingly, in the exemplary embodiment of the invention wherein the scaling factor determination is performed algorithmically using pressure values obtained intrinsically by the system during pressure measurement, there is no need for the caregiver or subject to measure such parameter. This advantageously simplifies the scaling process.

As previously noted, the data presented above was obtained by the Assignee while conducting clinical trials in validation of the methodology of the present invention. Specifically, the Applicant selected a number (>20) of individuals at random, and obtained multiple tonometric waveforms for each. This generated in excess of 500 data files relating to these individuals. Each data file was broken into a plurality of "epochs" (e.g., 10-beat increments), with the pressure value being averaged over each epoch. The aforementioned BMI-based scaling was applied to each averaged epoch, with all scaled epochs ultimately being collectively analyzed to generate "global" or non-individual specific data. The radial artery of one arm of each individual was arbitrarily chosen as the basis for the measurements, while the other arm of the same individual(s) was utilized to provide substantially concurrent A-line invasive catheter measurements of blood pressure. Results of this "proof of principles" testing yielded very low errors in both systolic and diastolic measurements of roughly −1.2 mmHg (std. deviation=8.6) and −2.6 mmHg (std. deviation 5.4), respectively, after scaling as compared to the corresponding A-line values, thereby validating the methodology experimentally. Note that based on the required +/−5 mmHg (std. deviation=S mmHg) performance level of the well known AAMI SP10 standard relating to auscultation/oscillometric blood pressure measurement techniques, the clinical performance of the present invention is excellent.

BMI/WC Scaling

Referring now to FIG. **5***i*, a second exemplary embodiment of the method of scaling (step **514** of FIG. **5***d*) is described. In this second embodiment, the second physiologic parameter comprises the circumference of the subject's wrist (WC) at the point of measurement. This is functionally related to the BMI previously described to produce a sealing index, as described in greater detail below.

In the first step **562** of the method of scaling **560** of FIG. **5***i*, the BMI value is obtained for the subject as previously described herein with reference to FIG. **5***d*. Next, in step **564**, the BMI value determined in step **562** is related to the second parameter (e.g., wrist circumference of the same subject) to obtain a scaling index I_s as defined by Eqn. 6:

$$I_s = \text{BMI}/\text{WC} \qquad \text{(Eqn. 6)}$$

where:

I_s=Scaling factor (considered dimensionless)

BMI=Body mass index (Kg/m^2)

WC=Wrist circumference (cm)

"Typical" values for I_s range from approximately 2 to 10, although values outside this range may be observed. Note, however, that the term "typical" here refers to values observed over a broad cross-section of the general population, and variations in body type, bone size, weight, body fat content, and the like may cause significant variations in I_s between two individuals.

From the scaling index value I_s determined for each individual, a scale factor K_s is next determined (step **566**). Table 1 below illustrates one exemplary approach used to derive the scaling factor K_s from the scaling index I_s. This table is derived from empirical data obtained by the Assignee during clinical trials of a statistically significant number of individuals, as compared to auscultation/oscillometry ("cuff") measurements obtained from the same individuals.

TABLE 1

Scale Index (I_s)	Scale Factor (K_s)	Remarks
>4.0	1.2 (20%)	Significant fatty tissue present at radial artery
3.3-4.0	1.09 (9%)	Some fatty tissue present at radial artery

TABLE 1-continued

Scale Index (I_s)	Scale Factor (K_s)	Remarks
<3.3	1.0 (no scaling)	Little fatty tissue present at radial artery

The embodiment of Table 1 has the advantage of simplifying the K_s determination process, since the K_s value to be applied to the measured blood pressure of the subject is chosen from a limited number of discrete intervals (i.e., I_s value ranges). For example, consider the subject having an I_s value of 2.8. Using Table 1, it can be seen that no scaling of the raw blood pressure measurement is required. This relates primarily to the subject having a comparatively large wrist circumference in relation to their BMI, often indicating the absence of significant amounts of fatty tissue at the measurement site (i.e., radial artery). Less fatty tissue provides more complete "coupling" (less transfer loss) between the pressure transducer and the blood vessel wall, thereby requiring less corrective scaling.

In contrast, consider the individual with an I_s value of 6.0. For this individual, Table 1 indicates that a scale factor of 1.2 should be applied (effectively correcting the observed pressure value upward by 20 percent). Such scaling is needed since the transfer loss for this individual is substantially greater, as reflected in the greater ratio of their body mass index (BMI) to their wrist circumference. Hence, the BMI (numerator) tends to drive or be directly related to the amount of fatty tissue present at the subject's wrist.

Lastly, in step **568**, the scale factor K_s is applied to the raw or uncorrected blood pressure measurement to obtain a scaled or corrected measurement. This is accomplished in the illustrated embodiment by simply multiplying the uncorrected pressure measurement by the scale factor K_s. For example, an unsealed value of 100 mmHg and a K_s of 1.2 would result in a corrected pressure value of 120 mmHg. As previously noted with respect to the BMI/PP embodiment described above, the tonometrically measured value will in effect always be less than true intravascular pressure, and accordingly the tonometric value will always be scaled upwards in magnitude.

It will be recognized that while the embodiment of Table 1 above is rendered in terms of a small number (three) of discrete scale index intervals, other numbers of intervals (whether equal in magnitude or not, or companded) may be utilized to impart a greater degree of precision or granularity to the pressure scaling correction process. For example, ten (10) intervals arranged in a logarithmic relationship could be utilized. As yet another alternative, other parameters may be used to qualify or substantiate the scaling process. For example, after the scaling factor K_s is determined using Table 1 (or similar), the proposed scaling factor could be cross-checked against a statistical database for other individuals or sub-classes of individuals (e.g., those with BMI above a certain value). In this fashion, data "outliers" can be identified before the scaling is applied, potentially instigating the caregiver to obtain a confirmatory measurement or consult other resources.

Note that since the method of FIG. **5***i* is at least in the present embodiment somewhat heuristic, very precise measurement of this second parameter is not critical. Accordingly, precise location of the measurement on the subject's wrist is similarly not critical. This underscores a significant advantage of the present methodology, in that the resulting scaling applied to the un-scaled pressure measurement is substantially insensitive to errors in the clinician's or caregiver's wrist circumference measurements. This advantage also exists with respect to the BMI determination of step **1002** previously described, since the BMI determination is fairly insensitive to errors in measurement of the subject's height and/or weight.

Alternatively, other physiological parameters may be utilized to "scale" the waveform (or scaling factor K_s before it is applied to the raw pressure measurement). For example, it is well known that the electrical impedance of a subject's tissue in a given region of the body can be related to the body mass of the subject. Typically, such measurements are made using electrical signals at high frequencies (e.g., 100-200 kHz) so as to overcome noise and other deleterious effects present at lower frequencies. Hence, the present invention may utilize such an electrical impedance measurement obtained from the subject's wrist or arm as a basis for determining body mass (or a BMI-equivalent parameter), the latter being used to scale the tonometric pressure waveform. Such measurements may also be used in a confirmatory capacity to qualify the scale factor derived by other means, and/or provide additional granularity within a given discrete range of scale factor.

In another embodiment, the relationship between the scale factor K_s and the scale index I_s is determined using a nomograph as illustrated in FIG. **6**. As shown in FIG. **6**, the nomograph **600** comprises a series of vertical scales **602**, **604**, **606**, **608**, **610**, **612**, **614** which are disposed in parallel relationship to one another on a planar surface (e.g., laminated card, paper, or the like), not shown. In the illustrated embodiment, the vertical scales comprise a weight scale **602**, a height scale **604**, a BMI scale **606**, a wrist circumference (WC) scale **608**, a scale index (I_s) scale **610**, a measured (raw) blood pressure scale **612**, and an actual or scaled blood pressure scale **614**. The various scales are aligned so as to permit sequential determination of the parameters of interest relating to the scaled blood pressure determination methodology described above. For example, the two left-hand scales **602**, **604** are entered (using the data obtained from the subject) and, using a straight-edge such as a ruler, the BMI value determined by aligning the straight-edge to intersect the weight and height scales **602**, **604** at the values obtained for each from the subject. The BMI value is then read off of the third (BMI) scale **606** where the straight edge intersects that scale **606**. The construction of such nomographic scales is well known in the mathematical arts, and accordingly is not described further herein.

In the nomograph **600** of FIG. **6**, the remaining scales (WC, scale factor, measured blood pressure, and corrected blood pressure) are disposed adjacent to the weight, height, and BMI scales to facilitate calculation of the corrected blood pressure. Specifically, after calculating the BMI as previously described, the user simply places the straight-edge on the nomograph such that the edge intersects the BMI and WC scales **606**, **608** at the determined BMI value and actual WC value of the subject, respectively. The scale factor K_s is then determined as being the point of intersection of the edge and the scale factor scale **610**. Continuing in similar fashion, the user then subsequently aligns the straight-edge such that it intersects the scale factor and raw blood pressure scales **610**, **612**, thereby intersecting the corrected pressure scale **614** at the value of the true (corrected) blood pressure. Using such scales on the same nomograph **600**, the present invention allows the user to "walk" the straight edge across the nomograph **600**, thereby obviating the need to record or even remember the results of intermediary calculations. Specifically, for example, after the BMI is calculated, the

user simply pivots the straight edge around the point of intersection of the straight edge and the BMI scale **606** until the WC scale **608** is properly intersected, thereby yielding the scale factor. Similarly, the user then pivots the straight edge around the point of intersection of the edge and the scale factor scale **610**, and so forth. The user accordingly need never even know the values of BMI or scale factor determined in these intermediary steps; rather, they need only remember (or record) the corrected blood pressure vale from the last scale **614**. However, a table **625** for recording the intermediary values (and the initial data obtained from the subject) is optionally provided to facilitate calculation and record keeping. With respect to the latter, the nomograph **600** may be reproduced on a sheet of paper which is layed upon a flat surface. The caregiver simply obtains the weight, height, and WC data from the subject, enters it into the applicable space in the table **625**, and then can easily refer to the date when conducting the aforementioned nomographic determinations. After these determinations are mad, the caregiver records the results in the appropriate spaces of the table **625**, and then saves the entire sheet in the subject's file or other location. In this fashion, the blood pressure determination can be advantageously reconstructed at a later date, thereby providing accountability and error identification.

It will be appreciated that the foregoing nomograph **600** of FIG. **6** can also be rendered or reduced to a "wheel" calculator configuration of the type well known in the art (not shown). Such wheel comprises one or more stationary and moving wheels, typically fabricated from a flexible laminated material, which rotate around a central spindle. The periphery or surfaces of the wheels are coded such that when various portions of the wheel are aligned (representing various values of the aforementioned parameters), the resulting value can be directly read off of another portion of a wheel. Such devices have the advantage of not requiring use on a flat surface, thereby allowing (i) the user significant mobility, and (ii) preventing the lack of a flat surface or straight edge from potentially distorting the results of the calculation. Yet other configurations may also be used consistent with the invention.

It will further be appreciated that the scales of the nomograph **600** as described above may be made discrete or continuous in nature, consistent with the desired application of the scaling factors. Hence, the functionality represented in Table 1 above may be readily made in nomographic form, or alternatively, a continuous, non-discrete representation (i.e., with I_s and K_s being continuous variables) may be made with equal ease.

Lastly, it is noted that the nomographic technique described above may also be applied if desired to the BMI/PP method previously described, the calculations of Eqns. 1-5 above being reduced to a nomographic representation by one of ordinary skill in the mathematical arts.

In yet another embodiment of the method of FIG. **5***i*, the relationship between the scale factor K_s and the scale index I_s is determined algorithmically via an embedded code within the processor or storage device of the blood pressure measurement apparatus (e.g., see discussion relating to FIG. **7** below). For example, the relationships of Table 1 above can be readily reduced to an algorithm or computer program (such as an assembly language program compiled from a C-based source code listing using an assembler) which performs the aforementioned determinations via the digital processor. A look-up table or similar structure can also be coded within the algorithm if desired. This algorithmic embodiment has the distinct advantage of obviating the aforementioned nomograph or similar device, and making the blood pressure correction process transparent to the user. Once properly qualified, the use of software code also reduces the risk of error in the scaling determination, since no misalignment of the straight-edge or similar error can occur. The coding and implementation of such algorithm is readily accomplished by those of ordinary skill in the computer programming arts, and accordingly is not described further herein.

Results of the various intermediary steps (i.e., BMI, scale factor determination) may also be optionally displayed on any display device associated with the system, and stored within the storage device or other desired location (or transmitted to a remote location such as via a computer network) to facilitate additional analysis.

It will further be recognized that the BMI/PP and BMI/WC methodologies may be combined and/or used in a confirmatory fashion to complement each other. For example, the scaling factor (and/or corrected blood pressure) determined using the aforementioned WC-based technique can be validated or checked using the PP-based technique, or vice versa. Alternatively, the results of the PP and WC-based techniques may be averaged or analyzed statistically. Many such permutations and combinations are possible consistent with the teachings of the present invention.

Lateral Search Methodology

Referring now to FIG. **7**, the methodology of lateral positioning of the transducer assembly of the applanator **402** is described. As previously discussed, it is desirable to properly place the transducer **422** directly superior to the blood vessel of concern (e.g., radial artery) prior to performing the optimal applanation, measurement, and scaling procedures discussed above. Such proper lateral placement helps ensure a high level of coupling between the blood vessel wall and transducer face, and in some regards helps to mitigate transfer loss.

As shown in FIG. **7**, the exemplary method **700** of the illustrated embodiment comprises first positioning the applanator element **402** (and hence the pressure transducer **422**) generally over the blood vessel of interest per step **702** as previously described with respect to FIG. **5**. The applanator element **402** is held within a brace or other apparatus such that the former is positioned generally over the inside surface of the subject's wrist. It is noted that the present method anticipates some degree of lateral misalignment.

Next, in step **704**, the level of applanation for the applanator **402** is adjusted so as to maintain a substantially constant pressure reading from the transducer **422**. This adjustment comprises "servoing" around the designated pressure so as to closely maintain the constant target pressure. This pressure is selected so as to provide adequate signal coupling between the artery wall and the active face of the transducer (via the interposed tissue and coupling layer **423**), while also permitting movement of the transducer **422** (and the coupling layer **423**) across the surface of the subject's skin without undue friction or distortion of the tissue which might be painful to the subject, or cause anomalies in the measured pressure waveform.

The applanator **402** is then moved laterally across the subject's wrist to a starting position which is offset from the blood vessel of concern (step **706**). For example, in one embodiment, the applanator **402** is moved toward the lateral portion of the subject's wrist, more proximate to the radial bone (and specifically the styloid process). It will be recognized, however, that other starting positions (e.g., medial or otherwise) may be used. The applanator **402** is positioned using a lateral positioning stepper motor **845** (see discussion

of FIG. **8** below) which is coupled to the applanator **402**. However, such positioning may be accomplished using any type of motive force, and may even be performed manually if desired.

Once the applanator **402** is positioned at its starting point, the pulse pressure (PP) is monitored (step **708**) based on the systolic and diastolic components obtained from the pressure waveform of the transducer **422**.

Next, in step **710**, a lateral position sweep is commenced using the lateral positioning motor **845**, the latter drawing the applanator **402** (and pressure transducer **422**) across the surface of the subject's skin while servoing in the sagittal direction to maintain the aforementioned predetermined pressure. In the present embodiment, a linear position sweep; i.e., constant rate of travel across the surface of the wrist, is utilized, although it will be appreciated that as with the applanation sweep previously described, other profiles (non-linear or otherwise) may be employed. Pulse pressure is measured during the sweep of step **710**, and the data stored for analysis.

The sweep rate is selected so as to penult sufficient collection of pressure waveform data and calculation of the PP per unit time, therefore providing the desired level of granularity for PP measurements. Specifically, if the sweep rate is too high, only a few PP data points will be generated, and the lateral position accuracy will be degraded. Conversely, if the sweep rate is too slow, positional localization using PP will be high, but the localization process will be long, thereby extending the time required to ultimately obtain a blood pressure measurement.

The sweep of step **710** continues until (i) a predetermined position for the applanator **402** relative to the starting position is achieved; and/or (ii) a pulse pressure maximum is observed. Other criteria for terminating the first lateral position sweep may also be utilized. FIG. **7***a* illustrates an exemplary PP versus lateral position profile obtained using the method **700**.

Once the lateral sweep of step **710** is completed, a second lateral sweep in the opposite direction is completed (step **712**). As shown in FIG. **7***b*, this second sweep back-tracks over the first sweep and again records measured PP as a function of time and/or position. In one embodiment, the second sweep operates over a smaller region (i.e., smaller lateral distance) than the first sweep, and at a slower rate to achieve a more precise location for the artery. Similar criteria for terminating the second sweep as to those used in the first sweep (step **710**) are employed.

Once the second sweep (step **712**) is completed, the data collected for both sweeps is analyzed (step **714**) to determine if a true PP maximum has been observed. Specifically, each set of data are analyzed to determine if the maximum PP value occurs at a lateral position (as determined by, e.g., the stepper motor position encoding) corresponding to that for the other sweep, within a prescribed error band. If the PP maxima are well correlated, there is a high confidence that one of the two maxima (or a position there between) comprises the true position where PP maximum pressure would be measured. Conversely, if the two maxima are not well correlated, additional data gathering (sweeps) may be needed to resolve the ambiguity and/or more accurately localize the desired lateral position for the transducer **422**.

In addition to maxima which are not well correlated in position, lateral sweep profiles with multiple local maxima and/or artifacts may be observed. As shown in FIGS. **7***c*-**7***d*, movement by the subject during sweep or other sources may induce noise within the PP profile(s), thereby frustrating the identification of the true maximum position. In the present embodiment, the occurrence of multiple or no maxima (as determined by, e.g., a mathematical analysis of each interval of the sweep relative to the others) will disqualify a given lateral sweep from consideration, and necessitate additional sweeps (step **716**). Signal processing algorithms capable of identifying artifacts and maxima/minima within pressure waveforms are well known in the art, and accordingly are not described further herein.

It is also noted that a "statistical mode" of operation may be employed with respect to the above-described method **700**. Specifically, a plurality of lateral position sweeps may be conducted before the analysis of step **714** is performed, with a corresponding (or lesser) number of those sweeps being included in the analyzed data set. In this fashion, artifacts or noise which is present in one sweep may not be present in the next, and therefore will have less degrading effect on the ultimate position determination. Signal processing and/or statistical analysis may be performed to the resulting data as desired.

Furthermore, the method of FIG. **7** (and the apparatus of FIG. **8** below) may be configured so as to localize in an iterative fashion around a calculated position. For example, each lateral positioning sweep is analyzed at its completion, and the results of the maximum location analysis used to localize the spatial region for subsequent sweep(s). Specifically, in one embodiment, the PP data obtained from the first lateral position sweep is analyzed, and the maximum PP location identified. Based on this information, the lateral positioning motor is repositioned (in the direction of motion opposite to the original sweep) to the beginning of a position window centered around the detected maximum PP location. A second, reduced duration "mini-sweep" is then conducted while the PP is measured, and the PP data subsequently analyzed at completion of the mini-sweep to identify the maximum PP location. Correlation analyses such as those previously described herein may or may not be applied as desired, to determine the correlation between the maximum PP locations identified in each sweep. This process may be continued if desired to more accurately locate the maximum PP location. It may also be performed periodically during continuous blood pressure monitoring (i.e., after the optimal applanation level has been determined and any necessary waveform scaling applied, per FIG. **5** above) if desired, so as to account for patient movement, slippage, etc. Specifically, the system may take a lateral positioning "time out", wherein the controller causes the applanation motor **406** to retract the applanator **402** to the predetermined constant pressure level (step **704** of FIG. **7**), and one or more lateral update sweeps performed.

It will be recognized that myriad different permutations of the foregoing steps (i.e., compression to a desired level, movement of the applanator **402** laterally across the blood vessel, and analysis of the maxima) may be utilized consistent with the present invention. All such permutations and modifications to this methodology are, given the disclosure provided herein, within possession of those of ordinary skill in the art.

System Apparatus for Hemodynamic Assessment

Referring now to FIG. **8**, an apparatus for measuring hemodynamic properties within the blood vessel of a living subject is now described. In the illustrated embodiment, the apparatus is adapted for the measurement of blood pressure within the radial artery of a human being, although it will be recognized that other hemodynamic parameters, monitoring sites, and even types of living organism may be utilized in conjunction with the invention in its broadest sense.

The exemplary apparatus **800** of FIG. **8** fundamentally comprises the applanation assembly **400** of FIG. **4** (including element **402** and pressure transducer **422**) for measuring blood pressure from the radial artery tonometrically; a digital processor **808** operatively connected to the pressure transducer(s) **422** (and a number of intermediary components) for (i) analyzing the signals generated by the transducer(s); (ii) generating control signals for the stepper motor **406** (via a microcontroller **811***a* operatively coupled to the stepper motor control circuits); and (iii) storing measured and analyzed data. The motor controllers **811**, processor **808**, auxiliary board **823**, and other components may be housed either locally to the applanator **402**, or alternatively in a separate stand-alone housing configuration if desired. The pressure transducer **422** and its associated storage device **852** are optionally made removable from the applanator **402** as described in greater detail below with respect to FIG. **8***a*.

The pressure transducer **422** is, in the present embodiment, a strain beam transducer element which generates an electrical signal in functional relationship (e.g., proportional) to the pressure applied to its sensing surface **421**, although other technologies may be used. The analog pressure signals generated by the pressure transducer **422** are converted into a digital form (using, e.g., an ADC **809**) after being optionally low-pass filtered **813** and sent to the signal processor **808** for analysis. Depending on the type of analysis employed, the signal processor **808** utilizes its program (either embedded or stored in an external storage device) to analyze the pressure signals and other related data (e.g., stepper motor position as determined by the position encoder **877**, scaling data contained in the transducer's EEPROM **852** via I2C1 signal, etc.).

As shown in FIG. **8**, the apparatus **800** is also optionally equipped with a second stepper motor **845** and associated controller **811***b*, the second motor **845** being adapted to move the applanator assembly **402** laterally across the blood vessel (e.g., radial artery) of the subject as described above with respect to FIG. **7**. Operation of the lateral positioning motor **845** and its controller **811***b* is substantially analogous to that of the applanation motor **406**, consistent with the methodology of FIG. **7**.

As previously discussed, continuous accurate non-invasive measurements of hemodynamic parameters (e.g., blood pressure) are highly desirable. To this end, the apparatus **800** is designed to (i) identify the proper level of applanation of the subject blood vessel and associated tissue; (ii) continuously "servo" on this condition to maintain the blood vessel/tissue properly biased for the best possible tonometric measurement; and (iii) scale the tonometric measurement as needed to provide an accurate representation of intravascular pressure to the user/operator. During an applantion "sweep", the controller **811***a* controls the applanation motor **406** to applanate the artery (and interposed tissue) according to a predetermined profile, such as that described with respect to FIG. **5**. Similarly, the extension and retraction of the applanation element **402** during the later states of the algorithm (i.e., when the applanation motor **406** is retracted to the optimal applanation position, and subsequent servoing around this point) are controlled using the controller **811***a* and processor **808**. The apparatus **800** is also configured to apply the scaling methodologies previous discussed with respect to FIGS. **5***d*-**5***i*. Specifically, as discussed with respect to FIG. **5***d* above, the corrected (scaled) pressure waveform is derived by (i) subtracting the average "n" pulse tonometrically measured mean pressure from each subsequent tonometric sample value of pressure (a "zero mean" sample result); (ii) multiplying each "zero mean" sample value derived in (i) by the derived scale factor, and adding back the "n" beat average mean pressure value; and (iii) repeating the process every "n" beats, using a newly derived scale factor. The resultant waveform is a scaled waveform which is effectively corrected for transfer loss.

In an alternate implementation, a "stretch" calculation is performed according to Eqn. 7 after the applanation sweep and optimization process has been completed:

$$P_{ts}=P_{tu}+(P_{th}\times S_{BMI}) \quad \text{(Eqn. 7)}$$

Where:

P_{ts}="stretched" or corrected tonometric pressure

P_{tu} uncorrected tonometric pressure

P_{th}=uncorrected tonometric pressure (high-pass filtered)

S_{BMI}=BMI stretch factor

This function effectively generates the corrected tonometric pressure data by adding the uncorrected pressure data to a high-pass filtered component of the uncorrected data which has been scaled by the BMI stretch factor. Based on empirical data, the BMI stretch factor in the present embodiment is set to range from between approximately 0.0 to +0.6, although other values may be used.

Note that during an applantion sweep of the "stretch" calculation, the scaling functionality described above is automatically turned off (with auto "on" feature" as well) since no scaling is required during the process of identifying the artifact of concern (e.g., maximum pulse pressure point). Additionally, the user/operator is permitted to determine the minimum cutoff value for the hemodynamic parameter (e.g., pressure) for the applanation sweep. A default value is set at 90 mmHg, although other values may be substituted. This minimum cutoff helps prevent the system from spuriously or erroneously triggering on an invalid event (e.g., a "false" maximum which may result at low pressure values due to the system configuration).

When the apparatus **800** begins data acquisition, a routine is optionally initiated which calculates the coefficients for the system's 4th-order high pass filter (with a cutoff frequency of 0.1625 Hz, which is selected to eliminate any DC component present in the signal. Additionally, for each data block (i.e., each group of data associated with a given monitoring interval), the apparatus **800** performs a parallel calculation of highpass filter tonometric data for the "stretch" calculation.

The present embodiment also includes a beat detection algorithm. When a new beat is detected (based on processing of the tonometric pressure waveform), a software call is made to update the BMI-determined stretch factor. If the subject's BMI information has not yet been entered, then system simply updates the (pulse) pressure history for future calculations.

The physical apparatus **800** of FIG. **8** comprises, in the illustrated embodiment, a substantially self-contained unit having, inter alia, a combined pressure transducer **422** and applanation device **400**, motor controllers **811**, RISC digital processor **808** with associated synchronous DRAM (SDRAM) memory **817** and instruction set (including scaling lookup tables), display LEDs **819**, front panel input device **821**, and power supply **823**. In this embodiment, the controllers **811** is used to control the operation of the combined pressure transducer/applanation device, with the control and scaling algorithms are implemented on a continuing basis, based on initial operator/user inputs.

For example, in one embodiment, the user input interface comprises a plurality (e.g., two) buttons disposed on the face of the apparatus housing (not shown) and coupled to the LCD display **879**. The processor programming and LCD

driver are configured to display interactive prompts via the display **879** to the user upon depression of each of the two buttons. For example, in the present context, one button is assigned as the "weight range" button, wherein when depressed, the LCD display **879** prompts the user to select from one of a plurality of discrete weight ranges. Similarly, the other button is assigned the "height range" function, wherein its depression prompts the user via the display to select one of a plurality of height ranges. Once these two values have been entered, the apparatus **800** automatically determines the PP as previously described, and uses the two inputs to calculate BMI, which is then automatically ratioed to the PP to generate a scaling factor. Such display and control functions are well within the capability of those of ordinary skill in the electronic arts, and accordingly are not described further herein.

Furthermore, a patient monitor (PM) interface circuit **891** shown in FIG. **8** may be used to interface the apparatus **800** to an external or third-party patient monitoring system. Exemplary configurations for such interfaces **891** are described in detail in co-pending U.S. patent application Ser. No. 10/060,646 entitled "Apparatus and Method for Interfacing Time-Variant Signals" filed Jan. 30, 2002, and assigned to the Assignee hereof, which is incorporated by reference herein in its entirety, although other approaches and circuits may be used. The referenced interface circuit has the distinct advantage of automatically interfacing with literally any type of patient monitor system regardless of its configuration. In this fashion, the apparatus **800** of the present invention coupled to the aforementioned interface circuit allows clinicians and other health care professionals to plug the apparatus into in situ monitoring equipment already on hand at their facility, thereby obviating the need (and cost) associated with a dedicated monitoring system just for blood pressure measurement.

Additionally, an EEPROM **852** is physically coupled to the pressure transducer **422** as shown in FIGS. **8** and **8***a*, so as to form a unitary unit **850** which is removable from the host apparatus **800**. The details of the construction and operation of such coupled assemblies are described in detail in co-pending U.S. application Ser. No. 09/652,626, entitled "Smart Physiologic Parameter Sensor and Method", filed Aug. 31, 2000, assigned to the Assignee hereof, and incorporated by reference herein in its entirety.

By using such a coupled and removable arrangement, both the transducer **422** and EEPROM **852** may be readily removed and replaced within the system **800** by the operator. Referring to the scaling methodologies previously described herein (e.g., BMI/PP and BMI/WC), the discrete scaling ranges are advantageously correlated to the unitary assembly **850** such that different assemblies are used for different scaling ranges. For example, in the context of the BMI/WC method as shown best in Table 1 above, three unitary assemblies **850** are provided, one corresponding to each range of scale index I_s. The EEPROM **852** of each assembly **850** is accordingly coded with the appropriate scale factor(s) corresponding to that scale index I_s, and is also visually coded (e.g., by color). The user/operator selects the appropriate assembly **850** based on the BMI/WC (scale index) value obtained from the subject to be monitored, and inserts the assembly **850** into the apparatus **800**. Scaling factors or related data present in the EEPROM **852** are retrieved from the EEPROM, and applied to the unsealed waveform (after applanation level, etc., are optimized as previously described herein) to produce a scaled output. This approach has the benefit of obviating the input or selection of data on the system by the operator; the operator simply determines the scale index value (such as by nomograph or calculator), and then selects the appropriate assembly **750** based on color (or textual information on the assembly or its package).

It will be recognized that the use of a limited number of transducer/EEPROM assemblies may be readily applied to the BMI/PP methodology previously described as well. For example, the full range of BMI/PP can be divided into n=0, 1, 2 . . . discrete intervals (whether linearly or in companded fashion), with a separate assembly **850** for each interval. The EEPROM **852** for each assembly will then contain the scaling data applicable to that interval, such scaling data being for example a scaling function segment, "stretch" factor, or similar. As yet another alternative, the assemblies **850** can be coded based purely on BMI value, thereby alleviating the operator from determining PP and calculating BMI/PP. Numerous other such variants are possible, all considered to fall within the scope of the present invention.

It is also noted that the apparatus **800** described herein may be constructed in a variety of different configurations, and using a variety of different components other than those specifically described herein. The construction and operation of such apparatus (given the disclosure provided herein) are readily within the possession of those of ordinary skill in the medical instrumentation and electronics field, and accordingly not described further herein.

The computer program(s) for implementing the aforementioned methods of hemodynamic assessment using optimal applanation and scaling is/are also included in the apparatus **800**. In one exemplary embodiment, the computer program comprises an object ("machine") code representation of a C^{++} source code listing implementing the methodology of FIGS. **5***d*-**5***i*, either individually or in combination thereof. While C^{++} language is used for the present embodiment, it will be appreciated that other programming languages may be used, including for example VisualBasic™, Fortran, and C^{+}. The object code representation of the source code listing is compiled and may be disposed on a media storage device of the type well known in the computer arts. Such media storage devices can include, without limitation, optical discs, CD ROMs, magnetic floppy disks or "hard" drives, tape drives, or even magnetic bubble memory. The computer program further comprises a graphical user interface (GUI) of the type well known in the programming arts, which is operatively coupled to the display and input device of the host computer or apparatus on which the program is run.

In terms of general structure, the program is comprised of a series of subroutines or algorithms for implementing the applanation and scaling methodologies described herein based on measured parametric data provided to the host apparatus **800**. Specifically, the computer program comprises an assembly language/micro-coded instruction set disposed within the embedded storage device, i.e. program memory, of the digital processor or microprocessor associated with the hemodynamic measurement apparatus **800**. This latter embodiment provides the advantage of compactness in that it obviates the need for a stand-alone PC or similar hardware to implement the program's functionality. Such compactness is highly desirable in the clinical and home settings, where space (and ease of operation) are at a premium.

Method of Providing Treatment

Referring now to FIG. **9**, a method of providing treatment to a subject using the aforementioned methods is disclosed. As illustrated in FIG. **9**, the first step **902** of the method **900** comprises selecting the blood vessel and location to be monitored. For most human subjects, this will comprise the

radial artery (as monitored on the inner portion of the wrist), although other locations may be used in cases where the radial artery is compromised or otherwise not available.

Next, in step **904**, the applanation mechanism **400** is placed in the proper location with respect to the subject's blood vessel. Such placement may be accomplished manually, i.e., by the caregiver or subject by visually aligning the transducer and device over the interior portion of the wrist, by the pressure/electronic/acoustic methods of positioning previously referenced, or by other means. Next, the first applanation element **402** is operated per step **906** so as to applanate the tissue surrounding the blood vessel to a desired level so as to identify an optimal position where the effects of transfer loss and other errors associated with the tonometric measurement are mitigated. The prior discussion regarding FIG. **5** herein illustrates one exemplary method of finding this optimum applanation level.

Once the optimal level of applanation for the applanator element **402** is set, the pressure waveform is measured per step **908**, and the relevant data processed and stored as required (step **910**). Such processing may include, for example, calculation of the pulse pressure (systolic minus diastolic), calculation of mean pressures or mean values over finite time intervals, and optional scaling of the measured pressure waveform(s). One or more resulting outputs (e.g., systolic and diastolic pressures, pulse pressure, mean pressure, etc.) are then generated in step **912** based on the analyses performed in step **910**. The relevant portions of the process is then repeated (step **914**) if desired so as to provide continuous monitoring and evaluation of the subject's blood pressure.

Lastly, in step **916**, the "corrected" measurement of the hemodynamic parameter (e.g., systolic and/or diastolic blood pressure) is used as the basis for providing treatment to the subject. For example, the corrected systolic and diastolic blood pressure values are generated and displayed or otherwise provided to the health care provider in real time, such as during surgery. Alternatively, such measurements may be collected over an extended period of time and analyzed for long term trends in the condition or response of the circulatory system of the subject. Pharmacological agents or other courses of treatment may be prescribed based on the resulting blood pressure measurements, as is well known in the medical arts. Similarly, in that the present invention provides for continuous blood pressure measurement, the effects of such pharmacological agents on the subject's physiology can be monitored in real time.

It is noted that many variations of the methods described above may be utilized consistent with the present invention. Specifically, certain steps are optional and may be performed or deleted as desired. Similarly, other steps (such as additional data sampling, processing, filtration, calibration, or mathematical analysis for example) may be added to the foregoing embodiments. Additionally, the order of performance of certain steps may be permuted, or performed in parallel (or series) if desired. Hence, the foregoing embodiments are merely illustrative of the broader methods of the invention disclosed herein.

While the above detailed description has shown, described, and pointed out novel features of the invention as applied to various embodiments, it will be understood that various omissions, substitutions, and changes in the form and details of the device or process illustrated may be made by those skilled in the art without departing from the spirit of the invention. The foregoing description is of the best mode presently contemplated of carrying out the invention. This description is in no way meant to be limiting, but rather should be taken as illustrative of the general principles of the invention. The scope of the invention should be determined with reference to the claims.

What is claimed is:

1. A method for determining an optimum location for applanating a blood vessel, comprising:

placing a transducer proximate to one side of a blood vessel at a starting position laterally offset from said substantially optimum location for applanating said blood vessel;

automatically moving said transducer laterally over said blood vessel from said starting position to an ending position at a first rate, said ending position being past said substantially optimum location for applanating said blood vessel on a second side of said blood vessel, said automatic moving occurring while simultaneously measuring pulse pressure of said blood vessel via said transducer in order to collect a first pulse pressure data set;

automatically backtracking said transducer laterally over said blood vessel from said ending position toward said starting position at a second rate, said automatic backtracking occurring while simultaneously measuring pulse pressure of said blood vessel via said transducer in order to collect a second pulse pressure data set;

based at least in part on a correlation between said first and second pulse pressure data sets, determining said optimum location; and

based at least in part on said determination of said optimum location, automatically positioning said transducer over said blood vessel to place said transducer over said substantially optimum location.

2. The method of claim **1**, wherein said act of determining said substantially optimum location of said blood vessel based at least in part on said first and second pulse pressure data sets comprises determining a location at which said measured pulse pressure of said blood vessel reaches a substantial maximum during said acts of automatically moving and backtracking said transducer laterally over said blood vessel.

3. The method of claim **1**, wherein said acts of automatically moving and backtracking said transducer laterally over said blood vessel each comprise moving said transducer continuously.

4. The method of claim **1**, wherein said first rate is a first substantially constant rate, and said second rate is a second substantially constant rate.

5. The method of claim **1**, wherein each of said act of simultaneously measuring said pulse pressure of said blood vessel while moving said transducer and said act of simultaneously measuring said pulse pressure of said blood vessel while backtracking said transducer comprises substantially continuous measurement of said pulse pressure of said blood vessel.

6. The method of claim **1**, further comprising attempting to maintain a constant level of compression by said transducer to said blood vessel during said acts of automatically moving and backtracking said transducer laterally over said blood vessel.

7. The method of claim **6**, wherein said level of compression comprises a level which is sufficient to at least partially compress said blood vessel.

8. The method of claim **1**, wherein said first sweep rate is greater than said second sweep rate.

9. The method of claim **1**, wherein said automatic backtracking of said transducer comprises automatically backtracking said transducer laterally over said blood vessel from

said ending position to an intermediate position between said starting position and said blood vessel.

10. The method of claim **9**, wherein a distance between said starting position and said ending position is greater than a distance between said ending position and said intermediate position.

11. The method of claim **1**, further comprising:

determining of a location of a pulse pressure maximum of said first pulse pressure data set, and

determining a location of a pulse pressure maximum of said second pulse pressure data set; and

wherein said determining said optimum location comprises determining whether said location of said pulse pressure maximum of said first pulse pressure data set correlates within a pre-determined error band to said location of said pulse pressure maximum of said second pulse pressure data set.

12. A method, comprising:

positioning a transducer laterally offset from a central portion of a blood vessel;

in a first sweep procedure, automatically sweeping said transducer laterally over said blood vessel past said central portion while simultaneously measuring pulse pressure of said blood vessel via said transducer;

in a second sweep procedure, automatically backtracking said transducer laterally over said blood vessel past said central portion substantially along a pathway of said first sweep procedure while simultaneously measuring pulse pressure of said blood vessel via said transducer;

determining a correlation between (i) a first location based at least on an optimal pulse pressure measured during said first sweep procedure and (ii) a second location based at least on an optimal pulse pressure measured during said second sweep procedure; and

based at least in part on said correlation being within a prescribed error band, automatically repositioning said transducer over an optimal location within said central portion of said blood vessel, said optimal location based at least in part on one or more said first or second locations.

13. The method of claim **12**, wherein each of said acts of automatically sweeping and backtracking said transducer laterally over said blood vessel further comprises moving said transducer continuously.

14. The method of claim **12**, wherein said act of automatically sweeping said transducer laterally over said blood vessel further comprises moving said transducer at a first substantially constant rate, and

said act of automatically backtracking said transducer laterally over said blood vessel further comprises moving said transducer at a second substantially constant rate, said first substantially constant rate being greater than said second substantially constant rate.

15. The method of claim **12**, wherein said act of measuring said pulse pressure of said blood vessel via said transducer during said first sweep procedure further comprises measuring said pulse pressure of said blood vessel continuously during said act of automatically sweeping said transducer laterally over said central portion of said blood vessel, and

said act of measuring said pulse pressure of said blood vessel via said transducer during said second sweep procedure further comprises measuring said pulse pressure of said blood vessel continuously during said act of automatically backtracking said transducer laterally over said central portion of said blood vessel.

16. The method of claim **12**, further comprising maintaining a substantially constant level of compression by said transducer to said blood vessel during said acts of automatically sweeping and backtracking said transducer laterally over said blood vessel past said central portion.

17. The method of claim **15**, wherein said level of compression comprises a level which is sufficient to at least partially compress said blood vessel.

18. The method of claim **12**, wherein:

said optimal pulse pressure measured during said first sweep procedure comprises a maximum pulse pressure measured during said first sweet procedure, and

said optimal pulse pressure measured during said second sweep procedure comprises a maximum pulse pressure measured during said second sweep procedure.

19. An apparatus configured to determine an optimum location for applanating a blood vessel, the apparatus comprising:

processor apparatus;

transducer apparatus in data communication with said processor apparatus;

storage apparatus in data communication with said processor apparatus, said storage apparatus having at least one computer program stored thereon, said at least one computer program comprising a plurality of instructions which are configured to, when executed, cause said apparatus to:

in a first sweep procedure, automatically move said transducer apparatus laterally over said blood vessel from a starting position to an ending position, said ending position being past said relative optimum location for applanating said blood vessel on a second side of said blood vessel;

simultaneously with said automatic movement of said transducer apparatus during said first sweep procedure, measure a pulse pressure of said blood vessel via said transducer apparatus to collect a first pulse pressure data set;

in a second sweep procedure, automatically backtrack said transducer apparatus laterally over said blood vessel from said ending position toward said starting position;

simultaneously with said automatic backtrack of said transducer apparatus during said second sweep procedure, measure a pulse pressure of said blood vessel via said transducer to collect a second pulse pressure data set;

analyze (i) said first pulse pressure data set to identify a first location based at least on an optimal pulse pressure measured during said first sweep procedure, and (ii) said second pulse pressure data set to identify a second location based at least on an optimum pulse pressure measured during said second sweep procedure;

determine a correlation between said first location and said second location;

based at least in part on said correlation being within a prescribed error band, automatically reposition said transducer apparatus over a relative optimum location within a central portion of said blood vessel, said relative optimum location based at least in part on one or more said first or second locations; and

based at least in part on said correlation being outside of said prescribed error band, automatically perform at least a third sweep procedure to collect at least a third pulse pressure data set.

20. The apparatus of claim **19**, wherein said plurality of instructions are further configured to, when executed, cause said apparatus to:

analyze said third pulse pressure data set to identify a third location based at least on an optimum pulse pressure measured during said third sweep procedure;

determine an additional correlation between said first location, said second location, and said third location;

based at least in part on said additional correlation being within said prescribed error band, automatically reposition said transducer apparatus over an alternate optimum location within said central portion of said blood vessel, said alternate optimum location based at least in part on said third location.

* * * * *

专利名称(译)	使用参数来非侵入地测量血液动力学参数的方法和设备		
公开(公告)号	US9814398	公开(公告)日	2017-11-14
申请号	US14/094574	申请日	2013-12-02
[标]申请(专利权)人(译)	坦西斯医药股份有限公司		
申请(专利权)人(译)	TENSYS MEDICAL，INC.		
[标]发明人	GALLANT STUART L VOSS GREGORY I MARKLE WILLIAM H		
发明人	GALLANT, STUART L. VOSS, GREGORY I. MARKLE, WILLIAM H.		
IPC分类号	A61B5/021 A61B5/00 A61B5/0225 A61B5/022		
CPC分类号	A61B5/021 A61B5/6843 A61B2562/0247 A61B2562/02		
其他公开文献	US20140163399A1		
外部链接	Espacenet USPTO		

摘要(译)
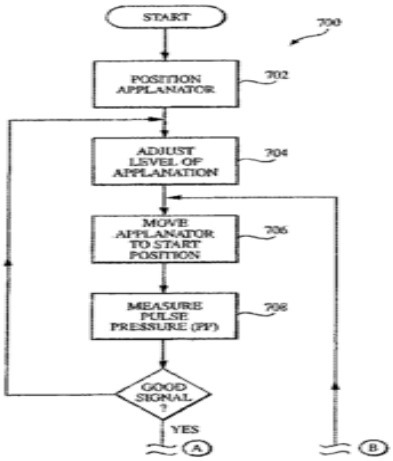
一种改进的方法和装置，用于非侵入性地评估与生物体的循环系统相关的一个或多个血液动力学参数。在一个方面，本发明包括通过压平或压缩接近所关注血管的组织部分直至达到所需条件，然后测量血液动力学参数来测量血液动力学参数（例如，动脉血压）的方法。这种压平有效地减轻了靠近血管的组织产生的转移和其他损失，从而促进了准确和稳健的眼压测量。还描述了适于维持最佳压平水平的算法。还公开了用于基于受试者生理学缩放这种血液动力学参数测量值并基于测量的参数向受试者提供治疗的方法和装置。