US 20180071023A1

(19) United States

(12) Patent Application Publication

(10) Pub. No.: US 2018/0071023 A1

(43) Pub. Date: Mar. 15, 2018

BUYSSE et al.

(54) **THERMAL FEEDBACK SYSTEMS AND METHODS OF USING THE SAME**

(71) Applicant: **COVIDIEN LP**, Mansfield, MA (US)

(72) Inventors: **STEVEN P. BUYSSE**, NIWOT, CO (US); **CASEY M. LADTKOW**, ERIE, CO (US); **BRANDON C. GAY**, SUPERIOR, CO (US)

(21) Appl. No.: **15/814,566**

(22) Filed: **Nov. 16, 2017**

Related U.S. Application Data

(60) Continuation of application No. 14/618,113, filed on Feb. 10, 2015, now Pat. No. 9,833,287, which is a continuation of application No. 14/066,050, filed on Oct. 29, 2013, now Pat. No. 8,956,350, which is a continuation of application No. 13/539,725, filed on Jul. 2, 2012, now Pat. No. 8,568,402, which is a division of application No. 12/023,606, filed on Jan. 31, 2008, now Pat. No. 8,211,099.

(60) Provisional application No. 60/887,537, filed on Jan. 31, 2007.

Publication Classification

(51) **Int. Cl.**

A61B 18/18	(2006.01)
A61B 18/12	(2006.01)
A61B 18/14	(2006.01)
A61B 5/01	(2006.01)
A61B 5/00	(2006.01)
A61B 18/00	(2006.01)

(52) **U.S. Cl.**

CPC .. ***A61B 18/1815*** (2013.01); *A61B 2018/1823* (2013.01); ***A61B 18/1477*** (2013.01); ***A61B 18/18*** (2013.01); ***A61B 5/015*** (2013.01); ***A61B 5/4836*** (2013.01); ***A61B 5/743*** (2013.01); *A61B 2018/00702* (2013.01); *A61B 2018/00011* (2013.01); *A61B 2090/378* (2016.02); *A61B 2090/3762* (2016.02); *A61B 2090/376* (2016.02); *A61B 2018/00791* (2013.01); *A61B 2018/00797* (2013.01); *A61B 2018/00815* (2013.01); *A61B 2018/00821* (2013.01); *A61B 2090/374* (2016.02); *A61B 2018/183* (2013.01); ***A61B 18/1206*** (2013.01)

(57) **ABSTRACT**

A system for providing feedback during an electrosurgical procedure on a target tissue is provided. The system includes an electrosurgical energy source; an electrode probe assembly connected to the electrosurgical energy source, wherein the electrode probe assembly includes at least one electrode assembly having a needle configured to deliver electrosurgical energy to the target tissue; at least one thermal feedback assembly connected to the electrosurgical energy source, wherein each thermal feedback assembly includes at least one temperature sensor assembly; and a hub configured to selectively support the electrode probe assembly and each thermal feedback assembly such that the needle of the electrode probe assembly and each temperature sensor assembly of each thermal feedback assembly are proximate one another when disposed proximate the target tissue.

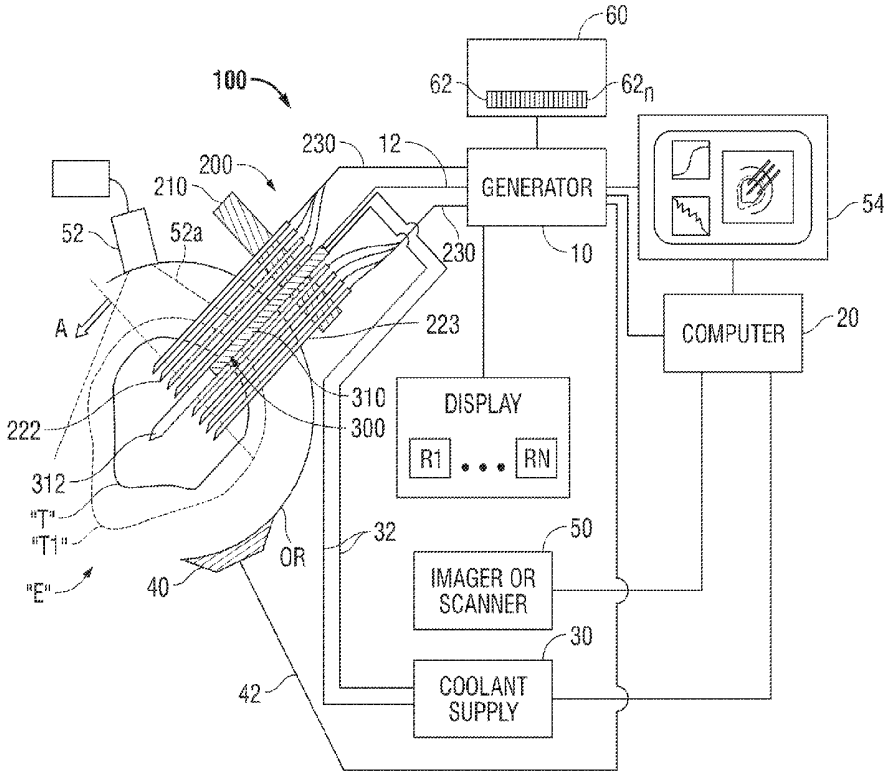

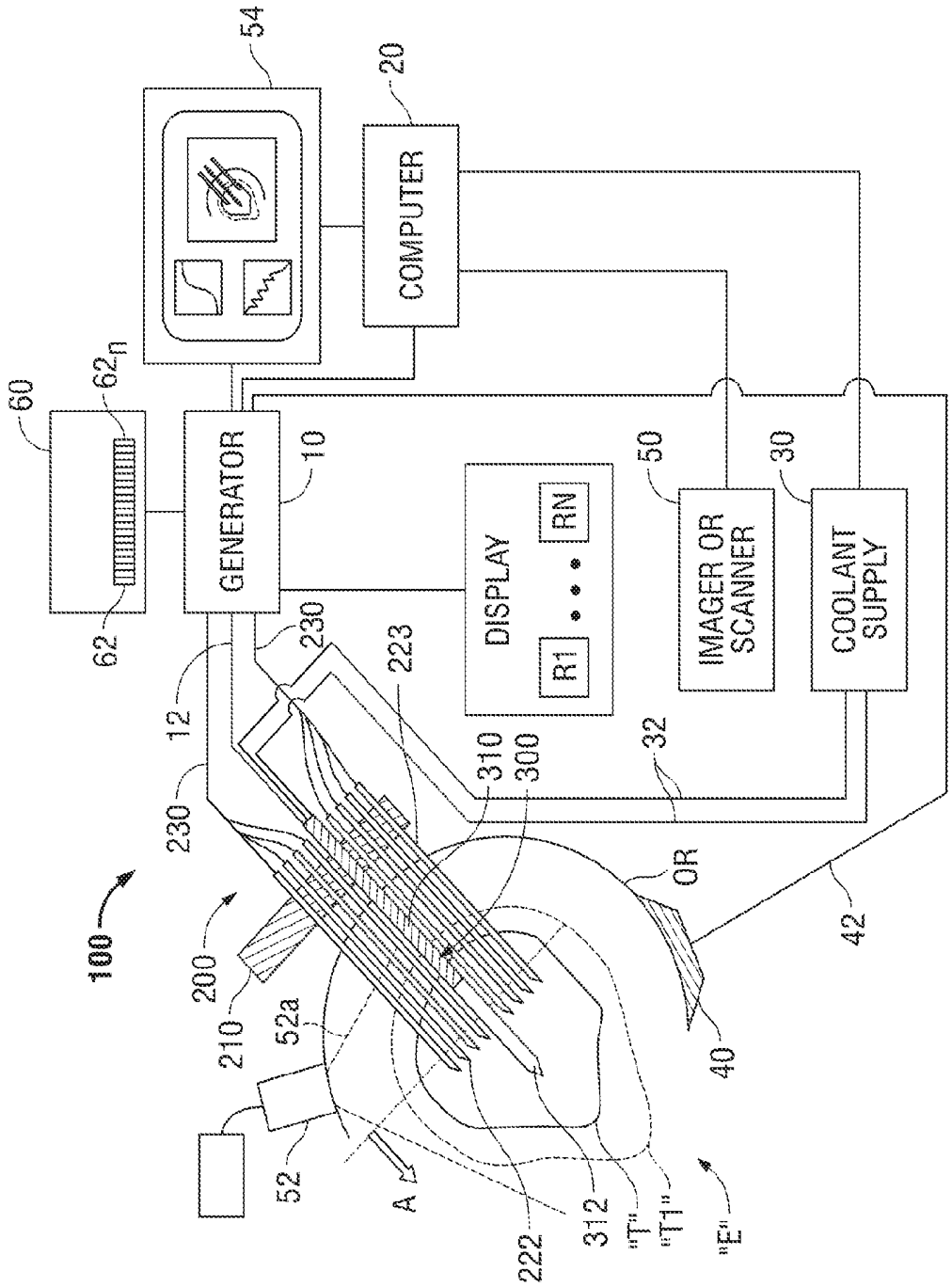
54
20
COMPUTER
60
62n
GENERATOR
10
62
12
230
223
DISPLAY
R1
RN
50
IMAGER OR SCANNER
30
COOLANT SUPPLY
32
310
300
OR
42
100
200
210
52a
40
52
A
222
312
"T"
"T1"
"E"

FIG. 1

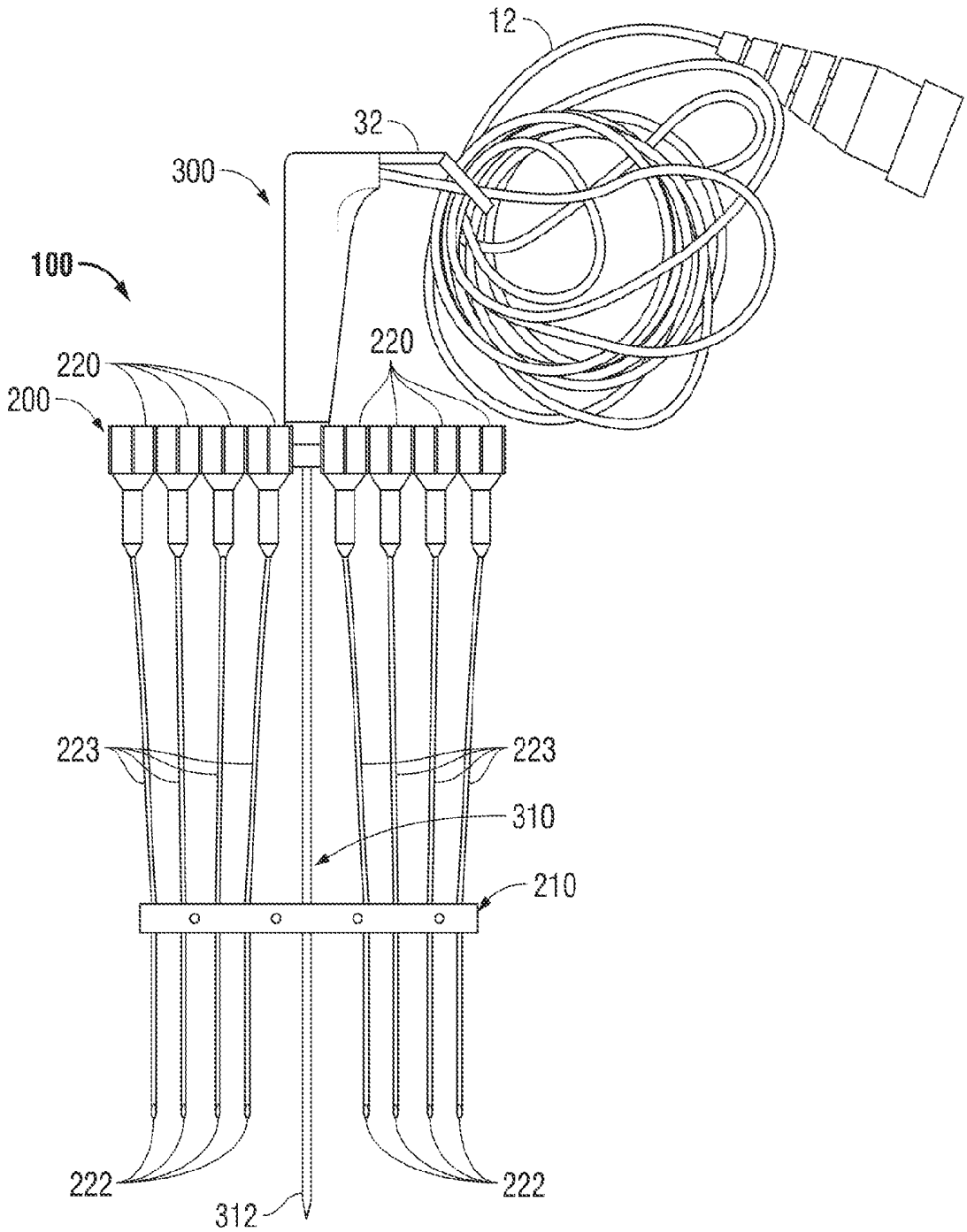

FIG. 2

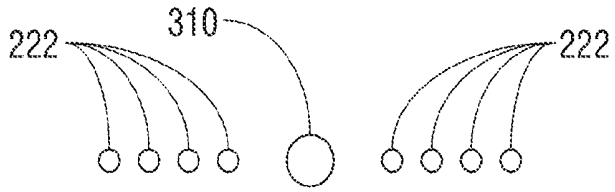

FIG. 2A

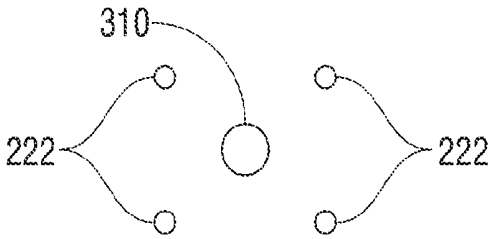

FIG. 2B

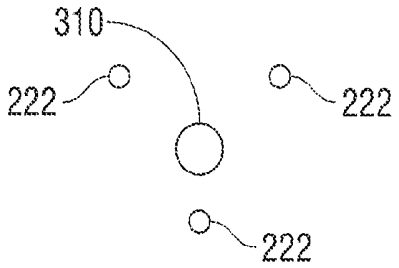

FIG. 2C

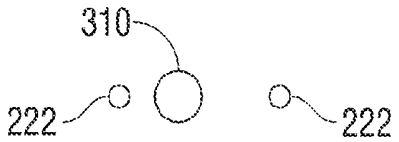

FIG. 2D

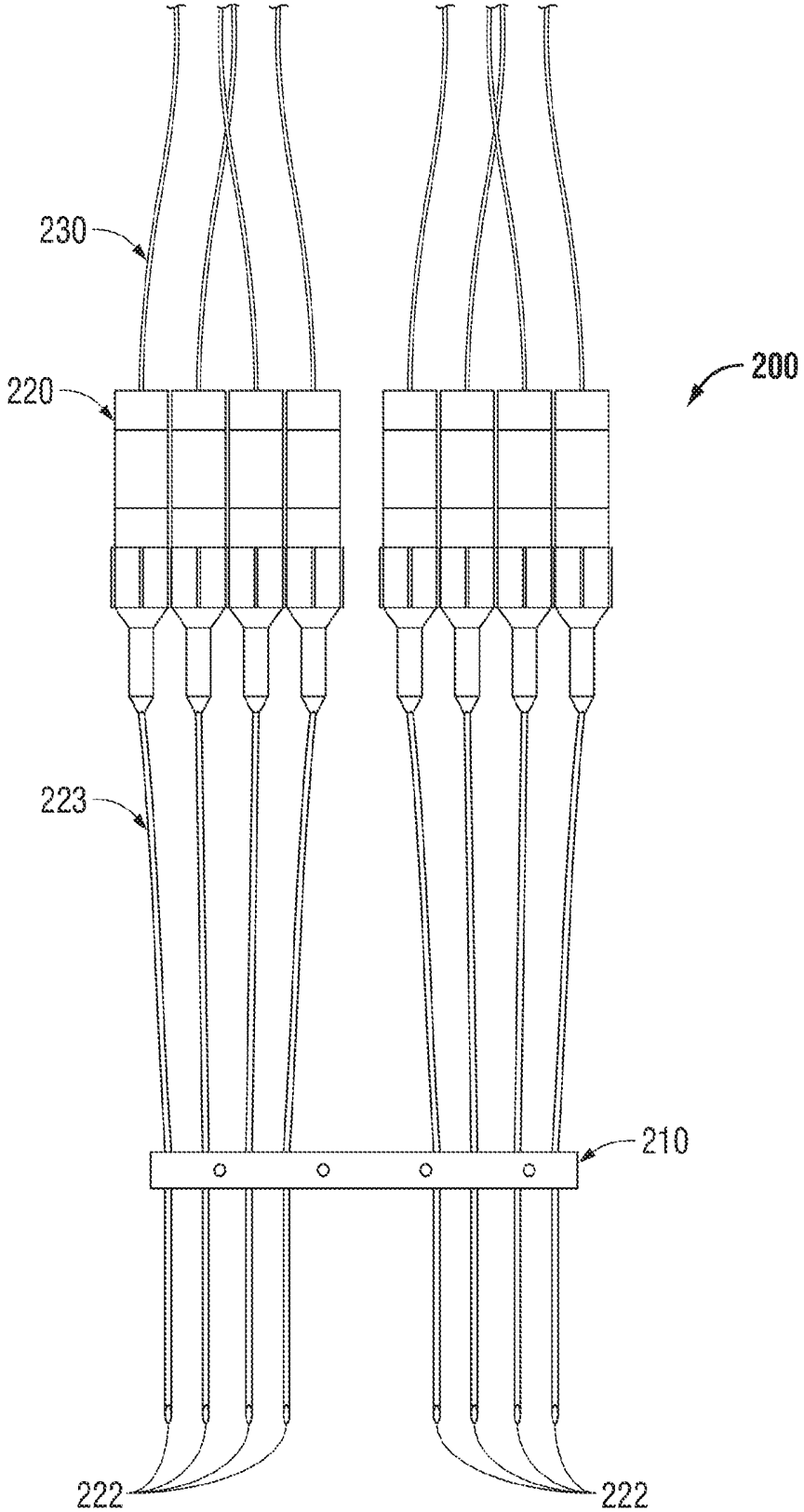

FIG. 3

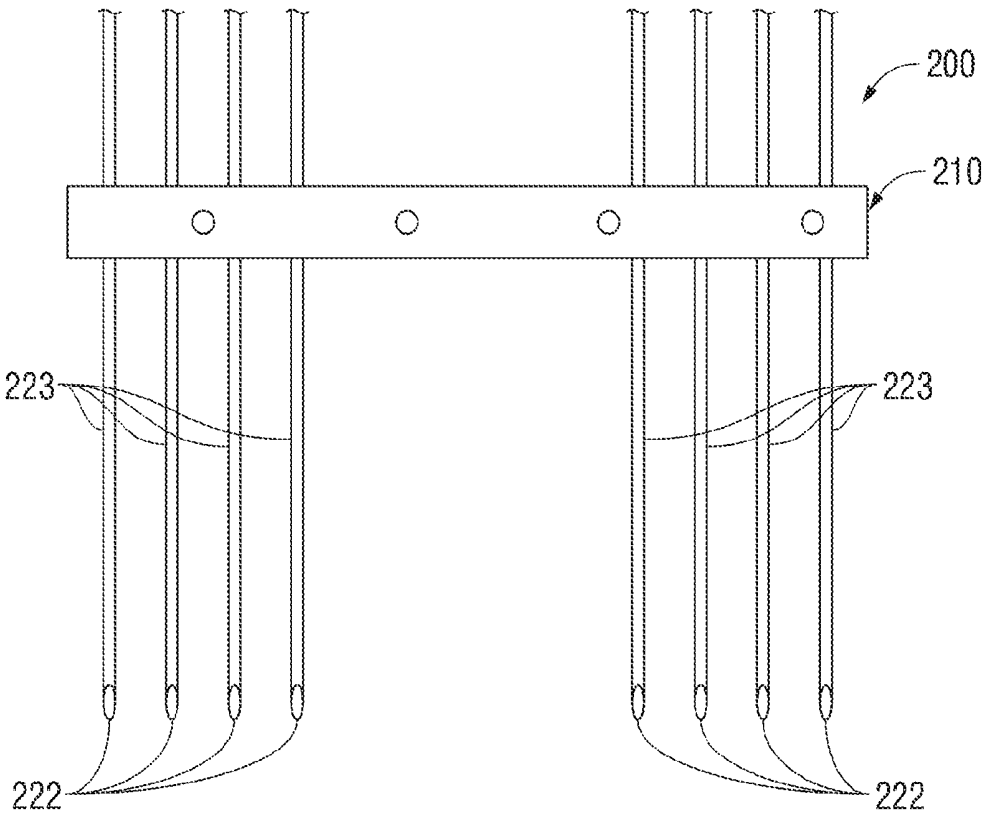

FIG. 4

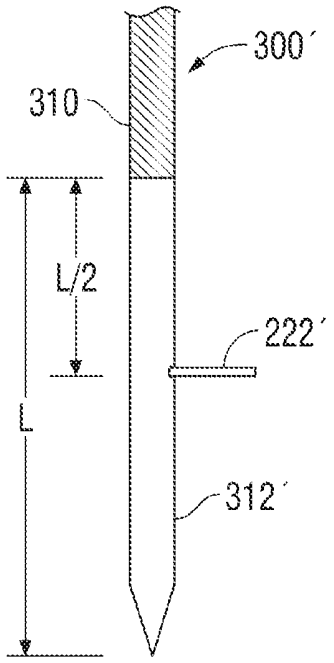

FIG. 5

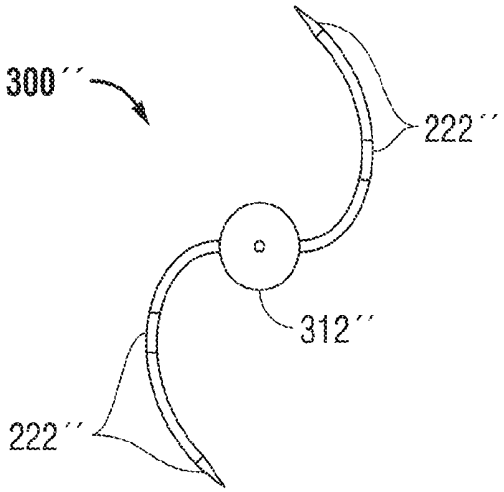

FIG. 6

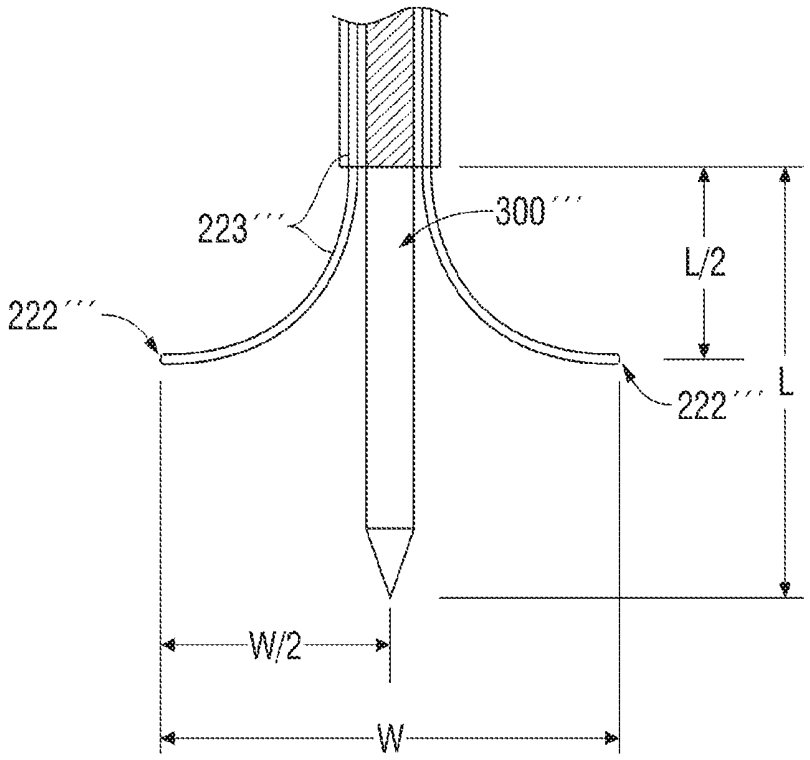

FIG. 7A

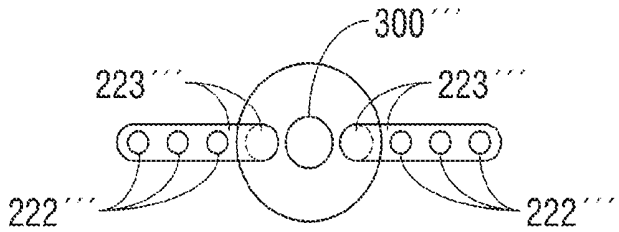

FIG. 7B

THERMAL FEEDBACK SYSTEMS AND METHODS OF USING THE SAME

CROSS-REFERENCE TO RELATED APPLICATIONS

[0001] The present application is a continuation application of U.S. patent application Ser. No. 14/618,113, filed Feb. 10, 2015, which is a continuation application of U.S. Pat. No. 8,956,350, filed Oct. 29, 2013, which is a continuation application of U.S. patent application Ser. No. 13/539,725, now U.S. Pat. No. 8,568,402, filed Jul. 2, 2013, which is a divisional application of U.S. patent application Ser. No. 12/023,606, now U.S. Pat. No. 8,211,099, filed Jan. 31, 2008, which claims the benefit of and priority to U.S. Provisional Application Ser. No. 60/887,537, filed on Jan. 31, 2007, the entire contents of all of which are incorporated by reference herein.

BACKGROUND

1. Technical Field

[0002] The present disclosure relates to energy delivery feedback systems and, more particularly to thermal feedback systems for electrosurgical energy systems and methods of their use.

2. Background of Related Art

[0003] The use of electrical energy including radiofrequency and microwave energy ("RF & MW energy") and, in particular, radiofrequency electrodes or microwave antennae ("RF-electrodes/MW-antennae") for ablation of tissue in the body or for the treatment of pain is known. Generally, such RF electrodes (e.g., probes, resistive heating elements and the like) include an elongated cylindrical configuration for insertion into the body to target tissue which is to be treated or ablated. The RF electrodes can further include an exposed conductive tip portion and an insulated portion. The RF electrodes can also include a method of internal cooling (e.g., a Cool-tip™ or the like), such as the RF electrodes shown and described in U.S. Pat. No. 6,506,189 entitled "COOL-TIP ELECTRODE THERMOSURGERY SYSTEM" issued to Rittman, III et al., on Jan. 14, 2003 and U.S. Pat. No. 6,530,922 entitled "CLUSTER ABLATION ELECTRODE SYSTEM" issued to Cosman et al., on Mar. 11, 2003, the entire content of which is incorporated herein by reference. Accordingly, when the RF electrode is connected to an external source of radiofrequency power, e.g., an electrosurgical generator (device used to generate therapeutic energy such as radiofrequency (RF), microwave (MW) or ultrasonic (US)), and current is delivered to the RF electrode, heating of tissue occurs near and around the exposed conductive tip portion thereof, whereby therapeutic changes in the target tissue, near the conductive tip, are created by the elevation of temperature of the tissue.

[0004] In some applications, for example, tumor ablation procedures, multiple electrodes are inserted into the body in an array to enlarge ablation volumes.

[0005] In a particular application, arrays of high frequency electrodes are inserted into tumors. The electrodes are typically placed in a dispersed fashion throughout the tumor volume to cover the tumor volume with uniform heat. The multiple electrodes may be activated simultaneously or sequentially applied with high frequency energy so that each electrode heats the surrounding tissue. During series activation, energy is applied to each electrode one at a time. This sequence of cycling the energy through the electrodes continues at a prescribed frequency and for a period of time.

[0006] The electrode systems discussed above are limited by the practical size of lesion volumes they produce. Accordingly, electrodes with cooled conductive tips have been proposed. With cooling, radiofrequency electrode tips generally produce larger lesion volumes compared with radiofrequency electrodes, which are not cooled. For example, standard single cylindrical electrodes, with cooled tips, as described above, may make lesion volumes up to 2 to 3 cm in diameter in living tissue (e.g., the liver) by using needles of 1 to 2 mm in diameter and having exposed tip lengths of several centimeters.

SUMMARY

[0007] The present disclosure relates to thermal feedback systems for electrosurgical energy systems and methods of their use.

[0008] According to an aspect of the present disclosure, a system for providing feedback during an electrosurgical procedure on a target tissue is provided. The system includes an electrosurgical energy source; an electrode probe assembly connected to the electrosurgical energy source, wherein the electrode probe assembly includes at least one electrode assembly having a needle configured to deliver electrosurgical energy to the target tissue; at least one thermal feedback assembly connected to the electrosurgical energy source, wherein each thermal feedback assembly includes at least one temperature sensor assembly; and a hub configured to selectively support the electrode probe assembly and each thermal feedback assembly such that the needle of the electrode probe assembly and each temperature sensor assembly of each thermal feedback assembly are proximate one another when disposed proximate the target tissue.

[0009] The needle of the electrode probe assembly may include an electrically conductive distal tip electrically connected to the electrosurgical energy source.

[0010] The electrode probe assembly may be fluidly connected to a coolant supply and may be configured to receive a circulating fluid therein.

[0011] The thermal feedback assembly may include a one or more temperature sensors. Each temperature sensor may be oriented substantially parallel to an axis defined by the needle of the electrode probe assembly or protrude 90 degrees from the center exposed active electrode. The plurality of temperature sensors may be arranged in a linear array. The plurality of temperature sensors may be disposed on opposed sides of the needle of the electrode probe assembly. The plurality of temperature sensors may be uniformly spaced from one another. The plurality of temperature sensors may be arranged in one of a linear, rectilinear and a triangular array.

[0012] The system may further include a computer connected to at least one of the electrosurgical energy source, the electrode probe assembly and each thermal feedback assembly. In an embodiment, at least one of the electrosurgical or microwave generator, the electrode probe assembly and each thermal feedback assembly may transmit information to the computer, and wherein the computer performs an Arrhenius model calculation on the information received

from the at least one of the electrosurgical energy source, the electrode probe assembly and each thermal feedback assembly.

[0013] The temperature sensors may include fiber optic temperature probes, thermisters, thermocouples or resistive temperature devices (RTD).

[0014] According to another aspect of the present disclosure, a method of performing a thermal treatment on a target tissue is provided. The method comprises the steps of providing an electrosurgical energy source; and providing a thermal feedback system. The thermal feedback system includes an electrode probe assembly connectable to the electrosurgical generator, wherein the electrode probe assembly includes at least one electrode assembly having a needle configured to deliver electrosurgical energy to the target tissue; at least one thermal feedback assembly connectable to the electrosurgical energy source, wherein each thermal feedback assembly includes at least one temperature sensor assembly; and a hub configured to selectively support the electrode probe assembly and each thermal feedback assembly such that the needle of the electrode probe assembly and each temperature sensor assembly of each thermal feedback assembly are proximate one another when disposed proximate the target tissue.

[0015] The method further includes the steps of inserting the needle of the electrode probe assembly and each temperature sensor of the thermal feedback assembly into a patient proximate the target tissue; activating the electrosurgical energy source for delivering electrosurgical energy to the target tissue via the needle of the electrode probe; and monitoring and transmitting changes in a characteristic of the target tissue to the electrosurgical energy source via the temperature sensors of the thermal feedback assembly.

[0016] The method may further include the step of performing an Arrhenius model calculation on the information received from each thermal feedback assembly.

[0017] The method may further include the step of selecting a particular electrode probe assembly for a particular thermal procedure or desired treatment size or volume. Size estimation may be accomplished prior to delivery of the electrode probe assembly. The method may further include the step of selecting a characteristic energy value to be delivered to the particular electrode probe assembly based on the characteristics of the electrode probe assembly and the characteristics of the target tissue to be treated.

[0018] The method may further include the step of providing feedback to the electrosurgical energy source from the plurality of thermal feedback probes. Size estimation may be conducted during energy activation.

[0019] The method may further include the step of providing a computer configured to receive information regarding characteristics of at least one of the target tissue, the feedback of energy delivery, the electrode probe assembly, the thermal feedback assembly and the electrosurgical energy source. The computer may be configured to receive feedback information from the thermal feedback assembly during a thermal treatment of the target tissue. The computer may be configured to perform an Arrhenius model calculation or other ablation size estimation on the information received from each thermal feedback assembly.

[0020] The method may further include the step of arranging the electrode probe assembly and each thermal feedback assembly in a linear array.

[0021] The method may further include the step of spacing the thermal feedback assemblies equally from each other and from the electrode probe assembly.

[0022] The method may further include the step of spacing the thermal feedback assemblies at a known or predetermined spacing.

[0023] The method may further include the step of circulating a fluid through the electrode probe assembly.

[0024] The method may further include the step of introducing the electrode probe assembly and each of the plurality of thermal feedback assemblies into the target tissue.

[0025] These and other aspects and advantages of the disclosure will become apparent from the following detailed description and the accompanying drawings, which illustrate by way of example the features of the disclosure.

BRIEF DESCRIPTION OF THE DRAWINGS

[0026] The features of the system and method of use of the system of the present disclosure will become more readily apparent and may be better understood by referring to the following detailed descriptions of illustrative embodiments of the present disclosure, taken in conjunction with the accompanying drawings, wherein:

[0027] FIG. **1** is a schematic illustration of a thermal feedback system illustrating an electrode probe assembly and a thermal feedback assembly of the present disclosure operatively associated with a target surgical site;

[0028] FIG. **2** is an illustration of the thermal feedback system of FIG. **1**;

[0029] FIG. **2**A is a schematic distal end view of the thermal feedback system of FIG. **2**, illustrating the temperature array in a linear arrangement;

[0030] FIG. **2**B is a schematic distal end view of an alternate arrangement of the thermal feedback system of FIG. **2**, illustrating the temperature array in a rectangular arrangement;

[0031] FIG. **2**C is a schematic distal end view of a further alternate arrangement of the thermal feedback system of FIG. **2**, illustrating the temperature array in a triangular arrangement;

[0032] FIG. **2**D is a schematic distal end view of the thermal feedback system of FIG. **2**, illustrating the temperature array in an alternate linear arrangement;

[0033] FIG. **3** is an illustration of a feedback/monitoring assembly of the thermal feedback system;

[0034] FIG. **4** is an enlarged view of the indicated area of detail of FIG. **3**;

[0035] FIG. **5** is a schematic illustration of a distal end of an electrode probe assembly according to a further embodiment of the present disclosure;

[0036] FIG. **6** is a distal end view of an electrode probe assembly similar to the electrode probe assembly of FIG. **5**;

[0037] FIG. **7**A is a schematic illustration of a distal end of an electrode probe according to an embodiment of the present disclosure; and

[0038] FIG. **7**B is a distal, elevational view of the electrode probe of FIG. **7**A.

DETAILED DESCRIPTION OF EMBODIMENTS

[0039] The systems and methods of the present disclosure provide for a more precise controlled monitoring and/or feedback of an electrode probe during therapeutic use in a target surgical site, e.g., in a cancer tumor. Moreover, the

systems and methods of the present disclosure provide for an improved ability to predict and/or estimate the depth and/or volume of treatment possible by the electrode probe when the electrode probe of an electrosurgical treatment device is set to a particular or various operative parameters.

[0040] It will be readily apparent to a person skilled in the art that the systems and methods of use of the systems can be used to monitor or provide feedback during treatment of body tissues in any body cavity or tissue locations that are accessible by percutaneous or endoscopic catheters or open surgical techniques, and is not limited to cancer tumors or the like. Application of the systems and methods in any corporal organ and/or tissue is intended to be included within the scope of the present disclosure.

[0041] 1. System for Thermal Feedback

[0042] In the drawings and in the description which follows, the term "proximal", as is traditional, will refer to the end of the system, or component thereof, which is closest to the operator, and the term "distal" will refer to the end of the system, or component thereof, which is more remote from the operator.

[0043] With reference to FIG. **1**, a thermal feedback system, according to an embodiment of the present disclosure, is generally designated as **100**. Feedback system **100** includes a thermal feedback assembly **200** operatively connected to an electrosurgical generator and/or energy source **10** and/or computer **20**.

[0044] At least one electrode probe assembly **300** is provided which is operatively associated with feedback assembly **200** and is connectable to electrosurgical energy source **10** in order to perform tissue ablation and the like. Each electrode probe assembly **300** may include a rigid shaft, antenna or needle **310** configured for insertion into a target tissue or organ "OR". Needle **310** of each probe assembly **300** may terminate in an exposed distal tip **312** having a pointed configuration for facilitating percutaneous insertion of needle **310** into body organ "OR". A portion of the external surface of needle **310** of each electrode probe assembly **300** is covered with an insulating material, as indicated by hatched line areas in FIG. **1**. Distal tip **312** remains uncovered and is connected, through needle **310**, to cable **12** and thereby to electrosurgical energy source **10**. Electrode probe assembly **300** may include a coolant supply **30** fluidly connected to needle **310** for circulating a fluid thereto via conduit(s) **32**.

[0045] Reference may be made to commonly assigned U.S. application Ser. No. 11/495,033, filed on Jul. 28, 2006, and entitled "COOL-TIP THERMOCOUPLE INCLUDING TWO-PIECE HUB" for a detailed discussion of the construction and operation of electrode probe assembly **300**.

[0046] Temperatures at, or near the exposed distal tip(s) **312** of needle(s) **310** may be controlled by adjusting a flow of fluid coolant through needle **310**. Accordingly, the temperature of the tissue contacting at or near distal tip(s) **312** is controlled. In operation, fluid from coolant supply **30** is carried the length of needle **310** through an inner tube (not shown) extending therethrough to the distal end of needle **310** terminating in an open end or cavity (not shown) of distal tip **312**. At the opposite end of needle **310**, the inner tube is connected to receive fluid. Backflow from distal tip(s) **312** is through an exit port (not shown) of needle **310**.

[0047] Feedback system **100** may further include a reference electrode **40** that may be placed in contact with the skin of a patient or an external surface of organ "OR" with a connection **42** to electrosurgical energy source **10**. Reference electrode **40** and connection **42** serve as a path for return current from electrosurgical energy source **10** through needle **310** of electrode probe assembly **300**.

[0048] As seen in FIG. **1**, by way of illustration only, a targeted region to be ablated is represented in sectional view by the line "T". It is desired to ablate the targeted region "T" by fully engulfing targeted region "T" in a volume of lethal heat elevation. The targeted region "T" may be, for example, a tumor which has been detected by an image scanner **50**. For example, CT, MRI, fluoroscopy or ultrasonic image scanners may be used, and the image data transferred to computer **20**. As an alternate example, an ultrasonic scanner head **52** may be disposed in contact with organ "OR" to provide an image illustrated by lines **52***a*.

[0049] For example, in FIG. **1**, dashed line "T**1**" represents the ablation isotherm in a sectional view through organ "OR". Such an ablation isotherm may be that of the surface achieving possible temperatures of approximately 50° C. or greater. At that temperature range, sustained for approximately 30 seconds to approximately several minutes, tissue cells will be ablated. The shape and size of the ablation volume, as illustrated by dashed line "T**1**", may accordingly be controlled by a configuration of the electrode probe assemblies **300** used, the geometry of distal tips **312** of electrode probe assemblies **300**, the amount of RF power applied, the time duration that the power is applied, the cooling of the needles **310** of electrode probe assemblies **300**, etc.

[0050] Data processors may be connected to display devices to visualize targeted region "T" and/or ablation volume "T**1**" in real time during the ablation procedure.

[0051] As seen in FIG. **1**, feedback system **100** may further include a library **60** including a plurality of thermal profiles/overlays $\mathbf{62}_n$. As used herein, the term library is understood to include and is not limited to repository, databank, database, cache, storage unit and the like. Each overlay **62** includes a thermal profile which is characteristic of and/or specific to a particular configuration of cannula/electrode assembly or amount of exposure (i.e., specific to the length of exposure of distal tip **312** of needle **310** or the amount of needle **310** extending from a distal tip of a cannula) of the cannula/electrode assembly. In addition, for each amount of exposure or configuration of the cannula/electrode assembly, a plurality of overlays $\mathbf{62}_n$ is provided which includes a thermal profile which relates to, for example, the amount of time electrode probe assembly **300** is activated, to the temperature to which electrode probe assembly **300** is heated, etc.

[0052] With continued reference to FIG. **1**, feedback system **100**, as mentioned above, includes a thermal feedback assembly **200** operatively connected to an electrosurgical generator **10** and/or computer **20**. Thermal feedback assembly **200** is operatively associated with the at least one electrode probe assembly **300**.

[0053] As seen in FIG. **1**, feedback assembly **200** includes a hub or housing **210** configured to selectively support at least one electrode probe assembly **300** and at least one temperature sensor assembly **220**. As seen in FIG. **1**, a plurality of temperature sensor assemblies **220** are shown supported in housing **210** on opposed sides of a single electrode probe assembly **300**. It is contemplated that any number of temperature sensor assemblies **220** may be disposed on a single side, on opposed sides, or on multiple sides

of the single electrode probe assembly **300** or relative to multiple electrode probe assemblies **300**. It is further contemplated that multiple temperature sensor assemblies **220** may be interspersed amongst multiple electrode probe assemblies **300**. Individual needles, cannula or introducers **223** may be used to introduce temperature sensors **222** into the target site or organ "OR".

[0054] As seen in FIG. **2**, housing **210** is used to position temperature sensor assemblies **220** on opposed sides of a singe electrode probe assembly **300** so as to define a single axis or plane. Housing **210** may be configured to position cannula **223** and temperature sensors **222** of temperature sensor assemblies **220** at a known distance from electrode probe assembly **300** and/or from one another, or are equidistant or uniformly spaced from one another.

[0055] As seen in FIG. **2**A, temperature sensors **222** and electrode assembly **310** are arranged in a linear array. As seen in FIG. **2**B, temperature sensors **222** and electrode assembly **310** may be arranged in a rectilinear array. As seen in FIG. **2**C, temperature sensors **222** and electrode assembly **310** may be arranged in a triangular array. As seen in FIG. **2**D, temperature sensors **222** are arranged at a known distance from electrode assembly **310**. As seen in FIGS. **2-2**D, electrode assembly **310** is located at the center of temperature sensors **222**; however, electrode assembly **310** may be located at any position relative to sensors **222**.

[0056] Each temperature sensor assembly **220** is electrically or optically connected to electrosurgical generator **10** via a suitable electrical connector or the like **230**.

[0057] Temperature sensors **222** include one or more of an emitter, sensor or marker to provide special relationship to electrode assembly **310**. Each temperature sensor assembly **220** may include a temperature sensor **222** in the form of a rigid or semi-rigid cannula **223** and/or needles configured for insertion and/or penetration into the target surgical site. Suitable temperature sensors **222** may include thermocouples, resistive temperature devices (RTD) or fiber optic temperature probes sold under the tradename "Fluoroptic® Thermometer, available from Luxtron®, Santa Clara, Calif. Temperature sensors **222** are shown and described in U.S. Pat. Nos. 4,075,497; 4,215,275; 4,448,547; 4,560,286; 4,752,141; 4,883,354; and 4,988,212.

[0058] Fluoroptic® temperature sensors **222** are configured to measure the decay time of light emitted from phosphorescent materials (e.g., phosphors). The decay time is a persistent property of the sensor that varies directly with the temperature.

[0059] Other suitable temperature sensors for use with temperature sensor assemblies **220**, to measure the temperature at a target surgical site, include and are not limited to optical sensors (e.g., Fluoroptic®, infrared, etc.), thermocouples, Resistance-Temperature-Detectors (RTD), thermistors, MRI, fluoroscopic, ultrasound, CT and the like.

[0060] Temperature sensors **222** may be configured to measure or monitor temperatures greater than about 60° C. In an embodiment, feedback system **100** may be provided with suitable algorithms or the like for interpolating temperature values from at least two temperature sensors **222** and/or for integrating thermal damage from at least two temperature sensors **222**. One real-time temperature sensor may be used in conjunction with an assumed or predetermined value from a look-up table or similar method.

[0061] The temperature measurements delivered to feedback system **100** may be used to generate a thermal map of the target area and/or, upon integration, may be used to account for particular tissue characteristics, such as, for example, perfusion, conduction, resistance and/or density.

[0062] In an embodiment, temperature sensors **222** may be deployed around needle **310** of the electrode probe assembly **300**. Such temperature sensors may be constructed of suitable shape memory alloys so as to permit the temperature sensor to wrap around needle **310**. Additionally, in an embodiment, a cannula including temperature sensors may be deployed about needle **310** of the electrode probe assembly **300**. In another embodiment, as seen in FIGS. **7**A and **7**B, temperature sensors **222** may protrude at a substantially right angle from a center or mid point of the exposed distal tip **312** of needle **310**.

[0063] Electrosurgical generator **10** and electrode probe assembly **300** may be configured to deliver energy to at least one of a radiofrequency, a microwave, an ultrasound, and a cryo-therapy needle.

[0064] Feedback system **100** is capable of providing size predictability for ablation volume to be created during a thermal procedure of a target region prior to the ablation volume exceeding a predetermined volume during the thermal procedure. For example, feedback system **100** may provide feedback regarding a volume of the thermal therapy (e.g., diameter), and estimation of an overall size of the volume of the thermal therapy, an estimation of a rate of growth of the volume of the thermal therapy, and/or an estimation of a time to completion of the thermal therapy. All of this information may be displayed on a monitor **54** (See FIG. **1**) or the like. Additionally, monitor **54** may illustrate the growth of the ablation volume, in real-time, as the procedure is going forward.

[0065] As seen in FIGS. **5-7**, a distal end of electrode probe assemblies according to further embodiments of the present disclosure are generally designated as **300'** and **300"**, respectively. Electrode probe assembly **300'**, **300'"** is substantially similar to electrode probe assembly **300** and thus will only be discussed in further detail herein to the extent necessary to identify differences in construction and operation thereof.

[0066] As seen in FIGS. **5** and **7**, distal tip **312'** of electrode probe assembly **300'** has a length of exposure "L". Additionally, electrode probe assembly **300'** is configured such that temperature sensor **222'** extends radially outward therefrom at a location approximately equal to "L/2". As seen in FIG. **5**, temperature sensor **222'** may extend radially and linearly from electrode probe assembly **300'** (e.g., in a plane that is substantially orthogonal to a longitudinal axis of electrode probe assembly **300'**), or, as seen in FIG. **6**, temperature sensor **222"** may extend radially and arcuately from electrode assembly **300"** (e.g., in a plane that is substantially orthogonal to a longitudinal axis of electrode probe assembly **300"**).

[0067] As seen in FIG. **5**, a single temperature sensor **222'** may extend from electrode assembly **300'**, and as seen in FIG. **6**, a pair of temperature sensors **222"** may extend from electrode assembly **300"**. In any of the embodiments disclosed herein, any number of temperature sensors **222'** or **222"** may be used to extend from electrode assembly **300'**, **300"** or **300'"**.

[0068] Each temperature sensor **222'** or **222"** may include at least one, and as seen in FIGS. **5** and **6**, a plurality of discrete respective temperature sensor elements **222*a*'**,

222*a*" disposed along a length thereof, such as, for example, at least at a tip thereof, at a mid-point thereof and at a base or proximal end thereof.

[0069] As seen in FIGS. **5** and **6**, each temperature sensor **222'** or **222"** may be slidably disposed within a respective electrode probe assembly **300'**, **300"** and configured so as to project and/or retract from within electrode probe assembly **300'** or **300"**. Each temperature sensor **222'**, **222"** may extend along an outer surface of a respective electrode probe assembly **300'**, **300"**.

[0070] Each temperature sensor **222'**, **222"** may be deployable to a known and/or predetermined radial distance from respective distal tips **312'**, **312"** of respective electrode probe assembly **310'**, **310"**. In accordance with FIG. **6**, or in embodiments employing multiple temperature sensors **222'"**, the multiple temperature sensors **222"** may be deployed to a known and/or predetermined distance from one another.

[0071] As seen in FIG. **7**, temperature sensors **222'"** may be disposed to a known and/or predetermined radial distance from electrode probe assembly **300'"**. Temperature sensors **222'"** are generally disposed L/2 and ½ desired diameter of thermal ablation (W/2), wherein "L" is the length of exposure of the distal end of electrode probe assembly **300'"** and "W" is the approximate diameter of the thermal ablation.

[0072] 2. Method for Thermal Feedback

[0073] With reference to FIGS. **1-7**B, a method of using thermal feedback system **100** during the thermal treatment of a target tissue or organ "OR" with electrode probe assembly **300**, **300'** or **300"**, in conjunction with hyperthermia feedback assembly **200**, is described.

[0074] A method of the present disclosure includes determining a zone of thermal treatment during and/or post treatment of the target tissue or organ "OR". The method may comprise the step of measuring a temperature of the target tissue or organ "OR", at known distances relative thereto, during and/or post treatment of the target tissue or organ "OR". The temperature of the target tissue or organ "OR", at the known distance, may be an absolute temperature and/or a temperature that is interpolated. Additionally, the method may comprise integrating the temperature over time to determine an extent of thermal treatment. Such an integration may be calculated using an "Arrhenius thermal treatment integral" or other methods of thermal damage estimation.

[0075] As used herein, "thermal damage" is a term that describes a quantity representing a relative amount of destruction to a tissue component. The component of interest can vary widely between applications from sub-cellular components, such as, for example, protein or organelles, to many celled systems, such as, for example, tumors or organs. To study systems spanning such a wide range of scale different techniques may be applied. For a relatively small system, one approach may be an "ab initio" method or some other molecular dynamic approach. For relatively larger systems, one approach may be to use an empirical method, such as, for example, the "Arrhenius" method described herein or a critical temperature criterion.

[0076] The term "Arrhenius thermal treatment" refers to a method of quantifying thermal effects on underlying tissue. The present method thus models microscopic effects in tissue, such as, for example, the denaturation of a single species of protein, or models macroscopic effects in tissue, such as, for example, a color change of the tissue associated with the thermal treatment where many different reactions have taken place.

[0077] The equation for the "Arrhenius model" may be represented by the following equation:

$$\Omega(t) = -\ln\left(\frac{c(t)}{c(o)}\right) = A\int_0^{\tau} e^{\left(\frac{-\Delta E}{RT}\right)}dt$$

[0078] where:

[0079] Ω=is the thermal effect sustained by the tissue or organ;

[0080] c(t)=is the amount of the component of interest remaining;

[0081] c(0)=is the amount of the component of interest at time zero;

[0082] A=is the frequency factor, approximately 7.39×10^{39} l/s (specific to liver tissue); and

[0083] ΔE=is the activation energy, approximately 2.577×10^{5} J/mol (specific to liver tissue).

[0084] The "Arrhenius model" is used because, in addition to combined processes, the "Arrhenius model" applies to individual processes as well. Individual processes that may be of interest include and are not limited to the denaturation of a lipid bi-layer of a cell, the denaturation of mitochondrial proteins, and the denaturation of nuclear proteins. The denaturation of lipid bi-layer is of interest because the lipid bi-layer loses its structure before many other parts of a cell. The denaturation of mitochondrial and nuclear proteins is of interest because they denature at temperatures in the range of about 42 to 60° C.

[0085] A method of the present disclosure may also include the step of using a position of electrode probe assembly **300**, **300'** or **300"** and needle **310**, positional temperature and/or feedback temperature received from hyperthermia feedback assembly **200** to determine the extent of thermal effect or treatment to the target tissue or organ "OR". The position of electrode probe assembly **300**, **300'** or **300"** and needle **310** may be determined using a suitable positional indicator. The positional temperature may be determined by the location of temperature sensor **222**, **222'**, **222"** or **222'"** and may be used to determine the presence of the lack of heat in the tissue or organ "OR".

[0086] A method of the present disclosure may also include the step of determining the spatial relationship between electrode probe assembly **300** and temperature sensor **222**. Spatial relationship of electrode probe assembly **300** and temperature sensor **222** and temperature measured at temperature sensor **222** are feedback to computer **20** to determine an extent of thermal damage that may be displayed on monitor **54** or used to alter the output of electrosurgical energy source **10**.

[0087] A method of the present disclosure may use a three-dimensional (3D) thermal image/map to determine a dimension of thermal treatment of the target tissue of organ "OR".

[0088] According to a method of the present disclosure, computer **20** of feedback system **100** is provided with information regarding a location of the target tissue or organ "OR", a location of critical biological structures (e.g., tissue, organs, vessels, etc.), a size and/or shape of the tumor or the target tissue or organ "OR" to be thermally treated, and a desired size of the thermal treatment volume. With this

information inputted into computer **20**, computer **20** may apply the "Arrhenius model" in order to develop a course of treatment.

[0089] According to a method of the present disclosure, an electrode probe assembly **300**, **300'** or **300"** including a particular needle **310** having a given length "L" of exposure of distal tip **312** thereof is selected for a particular thermal procedure. A length "L" of electrode exposure may be user selected based on a desired volume of tissue to be treated or diameter "W" of thermal treatment. With the particular electrode probe assembly **300**, **300'** or **300"** selected the parameters (e.g., dimensions, power rating, etc.) of electrode probe assembly **300**, **300'** or **300"** is manually inputted or automatically selected from a look-up table for use by the electrosurgical generator **10** and/or computer **20**.

[0090] With the parameters or characteristics of the tumor, target tissue or organ "OR" inputted into the electrosurgical energy source **10** and/or computer **20** and the parameters or characteristics of the electrode probe assembly **300**, **300'** or **300"** selected also inputted into the electrosurgical generator **10** and/or computer **20**, the parameters of the energy to be delivered to the tumor, target tissue or organ "OR", via the electrode probe assembly **300**, **300'** or **300"**, are determined. As seen in FIG. **1**, with the parameters of the energy to be delivered determined, thermal feedback assembly **200** and with electrode probe assembly **300** inserted into the patient, proximate the tumor, target tissue or organ "OR". In particular, temperature sensors **222** of thermal feedback assembly **200** and needle **310** of electrode probe assembly **300** may be inserted into the tumor, target tissue or organ "OR".

[0091] With thermal feedback assembly **200** and electrode probe assembly **300** positioned, the placement of thermal feedback assembly **200** and electrode probe assembly **300** is confirmed. Next, a spatial relationship of temperature sensors **222** and electrode probe assembly **300** may be determined by using thermal feedback assembly **200** or use of other markers, and communicated to electrosurgical energy source **10** and/or computer **20** for use of feedback control of energy parameter and/or size estimation. After confirmation of the placement of thermal feedback assembly **200** and electrode probe assembly **300** the thermal treatment of the tumor, target tissue or organ "OR" may begin. The thermal treatment of the tumor, target tissue or organ "OR" includes delivering energy produced by electrosurgical generator **10** to the tumor, target tissue or organ "OR" via electrode probe assembly **300**.

[0092] During the thermal treatment of the tumor, target tissue or organ "OR" hyperthermia feedback assembly **200** provides feedback to electrosurgical energy source **10** and/or computer **20** in the manner described above. Treatment progress is determined by computer **20** with feedback from at least one of image scanner **5**, electrosurgical energy source **10**, and temperature sensors **222**. Treatment progress is displayed on monitor **54**. Treatment progress includes one of size estimation, rate of treatment progression, and relationship of treatment volume to target volume.

[0093] While the above description contains many specific examples, these specific should not be construed as limitations on the scope of the disclosure, but merely as exemplifications of preferred embodiments thereof. Those skilled in the art will envision many other possible variations that are within the scope and spirit of the disclosure as defined by the claims appended hereto.

1-11. (canceled)

12. A thermal feedback system comprising:

an antenna assembly configured to couple to an electrosurgical generator and deliver electrosurgical energy to tissue;

a thermal feedback assembly including a hub and a plurality of temperature sensor assemblies and configured to measure a temperature of tissue during delivery of electrosurgical energy to tissue, the hub configured to support the antenna assembly and position the antenna assembly a preconfigured distance from each temperature assembly of the plurality of temperature assemblies.

13. The thermal feedback system according to claim **12**, wherein the thermal feedback assembly is configured to measure temperature proximate a distal portion of the antenna assembly.

14. The thermal feedback system according to claim **12**, wherein the antenna assembly includes an inner tube configured to circulate coolant fluid therethrough.

15. The thermal feedback system according to claim **12**, wherein the antenna assembly includes a distal radiating portion configured to deliver microwave energy.

16. The thermal feedback system according to claim **12**, wherein each temperature assembly of the plurality of temperature assemblies is positioned relative to the antenna assembly to form a linear array.

17. The thermal feedback system according to claim **12**, wherein each temperature assembly of the plurality of temperature assemblies is positioned relative to the antenna assembly to form a rectilinear array.

18. The thermal feedback system according to claim **12**, wherein the plurality of temperature assemblies includes a first temperature assembly and a second temperature assembly disposed on opposed sides of the antenna assembly.

19. The thermal feedback system according to claim **18**, wherein the first temperature assembly is positioned a first distance from the antenna assembly and the second temperature assembly is positioned a second, greater, distance from the antenna assembly.

20. The thermal feedback system according to claim **12**, wherein the plurality of temperature assemblies includes a first plurality of temperature assemblies and a second plurality of temperature assemblies disposed on opposed sides of the antenna assembly.

21. The thermal feedback system according to claim **12**, wherein each temperature assembly of the plurality of temperature assemblies is positioned relative to the antenna assembly to form a triangular array.

22. The thermal feedback system according to claim **12**, wherein each temperature assembly of the plurality of temperature assemblies forms a rigid cannula with a tapered distal tip for insertion through tissue.

23. A thermal feedback system comprising:

an electrosurgical generator configured to generate electrosurgical energy;

an antenna assembly configured to couple to the electrosurgical generator and deliver electrosurgical energy to tissue;

a thermal feedback assembly including a hub and a plurality of temperature sensor assemblies and configured to measure a temperature of tissue during delivery of electrosurgical energy to tissue, the hub configured to support the antenna assembly and position the

antenna assembly a preconfigured distance from each temperature assembly of the plurality of temperature assemblies.

24. The thermal feedback system according to claim **23**, wherein the thermal feedback assembly is configured to measure temperature proximate a distal portion of the antenna assembly.

25. The thermal feedback system according to claim **23**, wherein the antenna assembly includes an inner tube configured to circulate coolant fluid therethrough.

26. The thermal feedback system according to claim **23**, wherein the antenna assembly includes a distal radiating portion configured to deliver microwave energy.

27. The thermal feedback system according to claim **23**, wherein each temperature assembly of the plurality of temperature assemblies is positioned relative to the antenna assembly to form a linear array.

28. The thermal feedback system according to claim **23**, wherein each temperature assembly of the plurality of temperature assemblies is positioned relative to the antenna assembly to form a rectilinear array.

29. The thermal feedback system according to claim **23**, wherein the plurality of temperature assemblies includes a first temperature assembly and a second temperature assembly disposed on opposed sides of the antenna assembly.

30. The thermal feedback system according to claim **29**, wherein the first temperature assembly is positioned a first distance from the antenna assembly and the second temperature assembly is positioned a second, greater, distance from the antenna assembly.

31. The thermal feedback system according to claim **23**, wherein the plurality of temperature assemblies includes a first plurality of temperature assemblies and a second plurality of temperature assemblies disposed on opposed sides of the antenna assembly.

* * * * *

专利名称(译)	热反馈系统及其使用方法		
公开(公告)号	US20180071023A1	公开(公告)日	2018-03-15
申请号	US15/814566	申请日	2017-11-16
[标]申请(专利权)人(译)	柯惠有限合伙公司		
申请(专利权)人(译)	COVIDIEN LP		
当前申请(专利权)人(译)	COVIDIEN LP		
[标]发明人	BUYSSE STEVEN P LADTKOW CASEY M GAY BRANDON C		
发明人	BUYSSE, STEVEN P. LADTKOW, CASEY M. GAY, BRANDON C.		
IPC分类号	A61B18/18 A61B18/12 A61B18/14 A61B5/01 A61B5/00 A61B18/00		
CPC分类号	A61B5/015 A61B2090/378 A61B18/1815 A61B2090/3762 A61B5/4836 A61B5/743 A61B18/1206 A61B18/1477 A61B18/18 A61B2018/00011 A61B2018/00702 A61B2018/00791 A61B2018/00797 A61B2018/00815 A61B2018/00821 A61B2018/183 A61B2018/1823 A61B2090/374 A61B2090/376 A61B5/0036		
优先权	60/887537 2007-01-31 US		
外部链接	Espacenet USPTO		

摘要(译)

提供了用于在目标组织上的电外科手术过程中提供反馈的系统。该系统包括电外科能源;连接到所述电外科能量源的电极探针组件，其中所述电极探针组件包括至少一个电极组件，所述电极组件具有被配置为将电外科能量递送到所述目标组织的针;连接到电外科能量源的至少一个热反馈组件，其中每个热反馈组件包括至少一个温度传感器组件;以及毂，其被配置为选择性地支撑电极探针组件和每个热反馈组件，使得当被设置在目标组织附近时，电极探针组件的针和每个热反馈组件的每个温度传感器组件彼此靠近。