US009642537B2

(12) **United States Patent**
Felix et al.

(10) **Patent No.: US 9,642,537 B2**
(45) **Date of Patent: May 9, 2017**

(54) **AMBULATORY EXTENDED-WEAR ELECTROCARDIOGRAPHY AND SYNCOPE SENSOR MONITOR**

(71) Applicant: **Bardy Diagnostics, Inc.**, Vashon, WA (US)

(72) Inventors: **Jason Felix**, Vashon Island, WA (US); **Jon Mikalson Bishay**, Seattle, WA (US); **Gust H. Bardy**, Carnation, WA (US)

(73) Assignee: **BARDY DIAGNOSTICS, INC.**, Charlotte, NC (US)

(*) Notice: Subject to any disclaimer, the term of this patent is extended or adjusted under 35 U.S.C. 154(b) by 0 days.

(21) Appl. No.: **14/684,260**

(22) Filed: **Apr. 10, 2015**

(65) **Prior Publication Data**

US 2016/0213263 A1 Jul. 28, 2016

Related U.S. Application Data

(63) Continuation-in-part of application No. 14/082,108, filed on Nov. 16, 2013, which is a
(Continued)

(51) **Int. Cl.**
A61B 5/0205 (2006.01)
A61B 5/00 (2006.01)
(Continued)

(52) **U.S. Cl.**
CPC ***A61B 5/02055*** (2013.01); ***A61B 5/0006*** (2013.01); ***A61B 5/0022*** (2013.01);
(Continued)

(58) **Field of Classification Search**
CPC A61B 5/02055; A61B 5/04325
See application file for complete search history.

(56) **References Cited**

U.S. PATENT DOCUMENTS

3,215,136	A	11/1965	Holter et al.
3,699,948	A	10/1972	Ota et al.

(Continued)

FOREIGN PATENT DOCUMENTS

DE	19955211	5/2001
EP	1859833	11/2007

(Continued)

OTHER PUBLICATIONS

US 6,527,714, 03/2003, Bardy (withdrawn)
(Continued)

Primary Examiner — William Thomson
Assistant Examiner — Amanda Steinberg
(74) *Attorney, Agent, or Firm* — Patrick J. S. Inouye; Leonid Kisselev

(57) **ABSTRACT**

Physiological monitoring can be provided through a syncope sensor imbedded into an electrocardiography monitor, which correlates syncope events and electrocardiographic data. Physiological monitoring can be provided through a lightweight wearable monitor that includes two components, a flexible extended-wear electrode patch and a reusable monitor recorder that removably snaps into a receptacle on the electrode patch. The wearable monitor sits centrally on the patient's chest at the sternal midline and includes a unique narrow "hourglass"-like shape, significantly improving the ability of the monitor to cutaneously sense cardiac electrical potential signals, particularly the P-wave and QRS interval signals, which indicate ventricular activity in electrocardiographic waveforms. The electrocardiographic electrodes on the electrode patch are tailored for axial positioning along the midline of the sternum to capture action potential propagation in an orientation that corresponds to the aVF lead in a conventional 12-lead electrocardiogram, which senses positive P-waves.

20 Claims, 20 Drawing Sheets

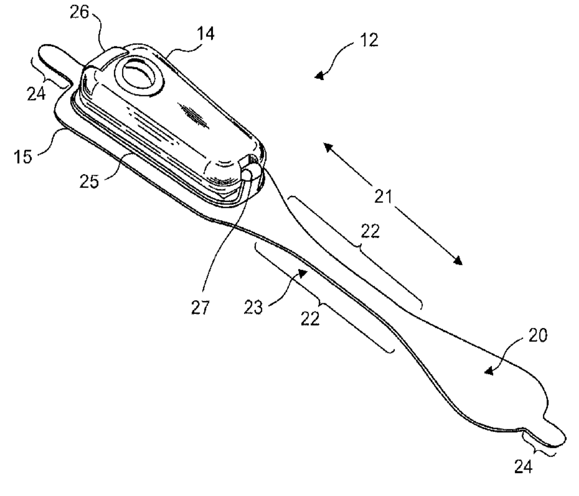

Related U.S. Application Data

continuation-in-part of application No. 14/080,717, filed on Nov. 14, 2013, now Pat. No. 9,545,204, and a continuation-in-part of application No. 14/080,725, filed on Nov. 14, 2013, application No. 14/684,260, which is a continuation-in-part of application No. 14/488,230, filed on Sep. 16, 2014, which is a continuation-in-part of application No. 14/080,725.

(60) Provisional application No. 61/882,403, filed on Sep. 25, 2013.

(51) **Int. Cl.**

A61B 5/04	(2006.01)
A61B 5/0408	(2006.01)
A61B 5/0432	(2006.01)
A61B 5/0452	(2006.01)
A61B 5/11	(2006.01)
A61B 5/01	(2006.01)
A61B 5/021	(2006.01)
A61B 5/087	(2006.01)
A61B 5/091	(2006.01)
A61B 5/145	(2006.01)
A61B 5/1455	(2006.01)
G01N 27/30	(2006.01)

(52) **U.S. Cl.**

CPC ***A61B 5/04017*** (2013.01); ***A61B 5/0452*** (2013.01); ***A61B 5/04085*** (2013.01); ***A61B 5/04087*** (2013.01); ***A61B 5/04325*** (2013.01); ***A61B 5/04525*** (2013.01); ***A61B 5/1116*** (2013.01); ***A61B 5/1117*** (2013.01); ***A61B 5/1118*** (2013.01); ***A61B 5/4809*** (2013.01); ***A61B 5/6801*** (2013.01); ***A61B 5/6823*** (2013.01); ***A61B 5/6833*** (2013.01); *A61B 5/01* (2013.01); *A61B 5/021* (2013.01); *A61B 5/087* (2013.01); *A61B 5/091* (2013.01); *A61B 5/14532* (2013.01); *A61B 5/14551* (2013.01); *A61B 5/7455* (2013.01); *A61B 2505/07* (2013.01); *A61B 2560/0271* (2013.01); *A61B 2560/045* (2013.01); *A61B 2560/0412* (2013.01); *A61B 2562/0219* (2013.01); *A61B 2562/164* (2013.01); *G01N 27/307* (2013.01)

(56) **References Cited**

U.S. PATENT DOCUMENTS

3,893,453	A	7/1975	Goldberg	
4,123,785	A	10/1978	Cherry et al.	
4,328,814	A	5/1982	Arkans	
4,441,500	A	4/1984	Sessions et al.	
4,532,934	A	8/1985	Kelen	
4,550,502	A	11/1985	Grayzel	
4,716,903	A	1/1988	Hansen	
4,809,705	A	3/1989	Ascher	
4,915,656	A	4/1990	Alferness	
5,025,794	A	6/1991	Albert et al.	
5,168,876	A	12/1992	Quedens et al.	
5,215,098	A	6/1993	Steinhaus	
D341,423	S	11/1993	Bible	
5,265,579	A	11/1993	Ferrari	
5,341,806	A	8/1994	Gadsby et al.	
5,355,891	A	10/1994	Wateridge et al.	
5,365,934	A	11/1994	Leon et al.	
5,392,784	A	2/1995	Gudaitis	
D357,069	S	4/1995	Plahn et al.	
5,402,780	A	4/1995	Faasse, Jr.	
5,402,884	A	4/1995	Gilman et al.	
5,450,845	A	9/1995	Axelgaard	
5,458,141	A	10/1995	Neil	
5,473,537	A	12/1995	Glazer et al.	
5,483,969	A	1/1996	Testerman et al.	
5,511,553	A	4/1996	Segalowitz	
5,540,733	A	7/1996	Testerman et al.	
5,546,952	A	8/1996	Erickson	
5,549,655	A	8/1996	Erickson	
5,579,919	A	12/1996	Gilman et al.	
5,582,181	A	12/1996	Ruess	
D377,983	S	2/1997	Sabri et al.	
5,601,089	A	2/1997	Bledsoe et al.	
5,623,935	A	4/1997	Faisandier	
5,682,901	A	11/1997	Kamen	
5,697,955	A	12/1997	Stolte	
5,749,902	A	5/1998	Olsen et al.	
5,817,151	A	10/1998	Olsen et al.	
5,819,741	A	10/1998	Karlsson et al.	
5,850,920	A	12/1998	Gilman et al.	
D407,159	S	3/1999	Roberg	
5,876,351	A	3/1999	Rohde	
5,906,583	A	5/1999	Rogel	
5,951,598	A	9/1999	Bishay et al.	
5,957,857	A	9/1999	Hartley	
5,984,102	A	11/1999	Tay	
6,032,064	A	2/2000	Devlin et al.	
6,038,469	A	3/2000	Karlsson et al.	
6,101,413	A	8/2000	Olsen et al.	
6,115,638	A	9/2000	Groenke	
6,117,077	A	9/2000	Del Mar et al.	
6,134,479	A	10/2000	Brewer et al.	
6,148,233	A	11/2000	Owen et al.	
6,149,602	A	11/2000	Arcelus	
6,149,781	A	11/2000	Forand	
6,188,407	B1	2/2001	Smith et al.	
D443,063	S	5/2001	Pisani et al.	
6,245,025	B1	6/2001	Torok et al.	
6,246,330	B1	6/2001	Nielsen	
D445,507	S	7/2001	Pisani et al.	
6,269,267	B1	7/2001	Bardy et al.	
6,272,385	B1	8/2001	Bishay et al.	
6,298,255	B1	10/2001	Cordero et al.	
6,301,502	B1	10/2001	Owen et al.	
6,304,773	B1	10/2001	Taylor et al.	
6,304,780	B1	10/2001	Owen et al.	
6,304,783	B1	10/2001	Lyster et al.	
6,374,138	B1	4/2002	Owen et al.	
6,416,471	B1 *	7/2002	Kumar	G06F 19/323 128/903
6,418,342	B1	7/2002	Owen et al.	
6,424,860	B1	7/2002	Karlsson et al.	
6,427,083	B1	7/2002	Owen et al.	
6,456,872	B1	9/2002	Faisandier	
6,463,320	B1	10/2002	Xue et al.	
6,546,285	B1	4/2003	Owen et al.	
6,605,046	B1	8/2003	Del Mar	
6,607,485	B2	8/2003	Bardy	
6,611,705	B2	8/2003	Hopman et al.	
6,671,545	B2	12/2003	Fincke	
6,671,547	B2	12/2003	Lyster et al.	
6,694,186	B2	2/2004	Bardy	
6,704,595	B2	3/2004	Bardy	
6,705,991	B2	3/2004	Bardy	
6,719,701	B2	4/2004	Lade	
6,754,523	B2	6/2004	Toole	
6,782,293	B2	8/2004	Dupelle et al.	
6,856,832	B1	2/2005	Matsumura et al.	
6,860,897	B2	3/2005	Bardy	
6,866,629	B2	3/2005	Bardy	
6,887,201	B2	5/2005	Bardy	
6,893,397	B2	5/2005	Bardy	
6,904,312	B2	6/2005	Bardy	
6,908,431	B2	6/2005	Bardy	
6,913,577	B2	7/2005	Bardy	
6,944,498	B2	9/2005	Owen et al.	
6,960,167	B2	11/2005	Bardy	
6,970,731	B1	11/2005	Jayaraman et al.	
6,978,169	B1	12/2005	Guerra	
6,993,377	B2	1/2006	Flick et al.	
7,020,508	B2	3/2006	Stivoric et al.	
7,027,864	B2	4/2006	Snyder et al.	

(56) References Cited

U.S. PATENT DOCUMENTS

7,065,401	B2	6/2006	Worden
7,085,601	B1	8/2006	Bardy et al.
7,104,955	B2	9/2006	Bardy
7,134,996	B2	11/2006	Bardy
7,137,389	B2	11/2006	Berthon-Jones
7,147,600	B2	12/2006	Bardy
7,215,991	B2	5/2007	Besson et al.
7,248,916	B2	7/2007	Bardy
7,257,438	B2	8/2007	Kinast
7,277,752	B2	10/2007	Matos
D558,882	S	1/2008	Brady
7,328,061	B2	2/2008	Rowlandson et al.
7,412,395	B2	8/2008	Rowlandson et al.
7,429,938	B1	9/2008	Corndorf
7,552,031	B2	6/2009	Vock et al.
D606,656	S	12/2009	Kobayashi et al.
7,706,870	B2	4/2010	Shieh et al.
7,756,721	B1	7/2010	Falchuk et al.
7,787,943	B2	8/2010	McDonough
7,874,993	B2	1/2011	Bardy
7,881,785	B2	2/2011	Nassif et al.
D639,437	S	6/2011	Bishay et al.
7,959,574	B2	6/2011	Bardy
8,116,841	B2	2/2012	Bly et al.
8,150,502	B2	4/2012	Kumar et al.
8,160,682	B2	4/2012	Kumar et al.
8,172,761	B1	5/2012	Rulkov et al.
8,180,425	B2	5/2012	Selvitelli et al.
8,200,320	B2	6/2012	Kovacs
8,231,539	B2	7/2012	Bardy
8,231,540	B2	7/2012	Bardy
8,239,012	B2	8/2012	Felix et al.
8,249,686	B2	8/2012	Libbus et al.
8,260,414	B2	9/2012	Nassif et al.
8,266,008	B1	9/2012	Siegal et al.
8,277,378	B2	10/2012	Bardy
8,285,356	B2	10/2012	Bly et al.
8,285,370	B2	10/2012	Felix et al.
8,308,650	B2	11/2012	Bardy
8,366,629	B2	2/2013	Bardy
8,374,688	B2	2/2013	Libbus et al.
8,412,317	B2	4/2013	Mazar
8,460,189	B2	6/2013	Libbus et al.
8,473,047	B2	6/2013	Chakravarthy et al.
8,478,418	B2	7/2013	Fahey
8,554,311	B2	10/2013	Warner et al.
8,591,430	B2	11/2013	Amurthur et al.
8,594,763	B1	11/2013	Bibian et al.
8,600,486	B2	12/2013	Kaib et al.
8,613,708	B2	12/2013	Bishay et al.
8,613,709	B2	12/2013	Bishay et al.
8,620,418	B1	12/2013	Kuppuraj et al.
8,626,277	B2	1/2014	Felix et al.
8,684,925	B2	4/2014	Manicka et al.
8,688,190	B2	4/2014	Libbus et al.
8,718,752	B2	5/2014	Libbus et al.
8,744,561	B2	6/2014	Fahey
8,774,932	B2	7/2014	Fahey
8,790,257	B2	7/2014	Libbus et al.
8,790,259	B2	7/2014	Katra et al.
8,795,174	B2	8/2014	Manicka et al.
8,798,729	B2	8/2014	Kaib et al.
8,798,734	B2	8/2014	Kuppuraj et al.
8,818,478	B2	8/2014	Scheffler et al.
8,818,481	B2	8/2014	Bly et al.
8,823,490	B2	9/2014	Libbus et al.
8,938,287	B2	1/2015	Felix et al.
8,965,492	B2	2/2015	Baker et al.
9,066,664	B2	6/2015	Karjalainen
9,155,484	B2	10/2015	Baker et al.
9,204,813	B2	12/2015	Kaib et al.
9,277,864	B2	3/2016	Yang et al.
9,339,202	B2	5/2016	Brockway et al.
2002/0013538	A1	1/2002	Teller
2002/0013717	A1	1/2002	Ando et al.

2002/0103422	A1	8/2002	Harder et al.	
2002/0120310	A1	8/2002	Linden et al.	
2002/0184055	A1	12/2002	Naghavi et al.	
2002/0193668	A1	12/2002	Munneke	
2003/0004547	A1	1/2003	Owen et al.	
2003/0073916	A1	4/2003	Yonce	
2003/0083559	A1	5/2003	Thompson	
2003/0097078	A1	5/2003	Maeda	
2003/0139785	A1	7/2003	Riff et al.	
2003/0176802	A1	9/2003	Galen et al.	
2003/0211797	A1	11/2003	Hill et al.	
2004/0008123	A1	1/2004	Carrender	
2004/0019288	A1	1/2004	Kinast	
2004/0034284	A1	2/2004	Aversano et al.	
2004/0049132	A1	3/2004	Barron et al.	
2004/0073127	A1	4/2004	Istvan et al.	
2004/0087836	A1	5/2004	Green et al.	
2004/0093192	A1	5/2004	Hasson et al.	
2004/0148194	A1	7/2004	Wellons et al.	
2004/0207530	A1	10/2004	Nielsen	
2004/0236202	A1	11/2004	Burton	
2004/0243435	A1	12/2004	Williams	
2004/0256453	A1	12/2004	Lammle	
2004/0260188	A1	12/2004	Syed et al.	
2004/0260192	A1	12/2004	Yamamoto	
2005/0096717	A1	5/2005	Bishay et al.	
2005/0108055	A1	5/2005	Ott et al.	
2005/0154267	A1	7/2005	Bardy	
2005/0182308	A1	8/2005	Bardy	
2005/0182309	A1	8/2005	Bardy	
2005/0215918	A1	9/2005	Frantz et al.	
2005/0222513	A1	10/2005	Hadley et al.	
2005/0228243	A1	10/2005	Bardy	
2005/0245839	A1	11/2005	Stivoric et al.	
2006/0025696	A1	2/2006	Kurzweil et al.	
2006/0025824	A1	2/2006	Freeman et al.	
2006/0030767	A1	2/2006	Lang et al.	
2006/0041201	A1	2/2006	Behbehani et al.	
2006/0122469	A1	6/2006	Martel	
2006/0124193	A1	6/2006	Orr et al.	
2006/0224072	A1	10/2006	Shennib	
2006/0235320	A1	10/2006	Tan et al.	
2006/0253006	A1	11/2006	Bardy	
2006/0264730	A1	11/2006	Stivoric et al.	
2007/0003115	A1	1/2007	Patton et al.	
2007/0050209	A1	3/2007	Yered	
2007/0078324	A1	4/2007	Wijisiriwardana	
2007/0093719	A1	4/2007	Nichols, Jr. et al.	
2007/0100248	A1	5/2007	Van Dam et al.	
2007/0100667	A1	5/2007	Bardy	
2007/0123801	A1	5/2007	Goldberger et al.	
2007/0136091	A1	6/2007	McTaggart	
2007/0179357	A1	8/2007	Bardy	
2007/0185390	A1	8/2007	Perkins et al.	
2007/0203415	A1	8/2007	Bardy	
2007/0203423	A1	8/2007	Bardy	
2007/0208232	A1	9/2007	Kovacs	
2007/0208233	A1	9/2007	Kovacs	
2007/0208266	A1	9/2007	Hadley	
2007/0225611	A1*	9/2007	Kumar	A61B 5/0006 600/523
2007/0244405	A1	10/2007	Xue et al.	
2007/0249946	A1	10/2007	Kumar et al.	
2007/0255153	A1	11/2007	Kumar et al.	
2007/0265510	A1	11/2007	Bardy	
2007/0276270	A1	11/2007	Tran	
2007/0276275	A1	11/2007	Proctor et al.	
2007/0293738	A1	12/2007	Bardy	
2007/0293739	A1	12/2007	Bardy	
2007/0293740	A1	12/2007	Bardy	
2007/0293741	A1	12/2007	Bardy	
2007/0293772	A1	12/2007	Bardy	
2007/0299325	A1	12/2007	Farrell et al.	
2007/0299617	A1	12/2007	Willis	
2008/0051668	A1	2/2008	Bardy	
2008/0058661	A1	3/2008	Bardy	
2008/0091097	A1	4/2008	Linti et al.	
2008/0139953	A1	6/2008	Baker et al.	
2008/0143080	A1	6/2008	Burr	

(56) References Cited

U.S. PATENT DOCUMENTS

2008/0177168	A1	7/2008	Callahan et al.	
2008/0194927	A1	8/2008	KenKnight et al.	
2008/0208009	A1	8/2008	Shklarski	
2008/0208014	A1	8/2008	KenKnight et al.	
2008/0284599	A1	11/2008	Zdeblick et al.	
2008/0288026	A1	11/2008	Cross et al.	
2008/0306359	A1	12/2008	Zdeblick et al.	
2009/0054952	A1	2/2009	Glukhovsky et al.	
2009/0062897	A1	3/2009	Axelgaard	
2009/0069867	A1	3/2009	KenKnight et al.	
2009/0073991	A1	3/2009	Landrum et al.	
2009/0076336	A1	3/2009	Mazar et al.	
2009/0076341	A1	3/2009	James et al.	
2009/0076342	A1	3/2009	Amurthur et al.	
2009/0076343	A1	3/2009	James et al.	
2009/0076346	A1	3/2009	James et al.	
2009/0076349	A1	3/2009	Libbus et al.	
2009/0076397	A1	3/2009	Libbus et al.	
2009/0076401	A1	3/2009	Mazar et al.	
2009/0076559	A1	3/2009	Libbus et al.	
2009/0088652	A1	4/2009	Tremblay	
2009/0112116	A1	4/2009	Lee et al.	
2009/0131759	A1*	5/2009	Sims	A61B 5/1135 600/301
2009/0216132	A1	8/2009	Orbach	
2009/0264792	A1	10/2009	Mazar	
2009/0270708	A1	10/2009	Shen et al.	
2009/0270747	A1	10/2009	Van Dam et al.	
2009/0292194	A1	11/2009	Libbus et al.	
2010/0007413	A1*	1/2010	Herleikson	A61B 5/0424 330/124 R
2010/0022897	A1	1/2010	Parker et al.	
2010/0056881	A1	3/2010	Libbus et al.	
2010/0081913	A1	4/2010	Cross et al.	
2010/0185063	A1	7/2010	Bardy	
2010/0185076	A1	7/2010	Jeong et al.	
2010/0191154	A1	7/2010	Berger et al.	
2010/0191310	A1	7/2010	Bly	
2010/0234715	A1	9/2010	Shin et al.	
2010/0234716	A1	9/2010	Engel	
2010/0280366	A1	11/2010	Arne et al.	
2010/0324384	A1	12/2010	Moon et al.	
2011/0054286	A1	3/2011	Crosby et al.	
2011/0066041	A1	3/2011	Pandia et al.	
2011/0077497	A1	3/2011	Oster et al.	
2011/0144470	A1	6/2011	Mazar et al.	
2011/0160548	A1	6/2011	Forster et al.	
2011/0224564	A1	9/2011	Moon et al.	
2011/0237924	A1	9/2011	McGusty et al.	
2011/0245699	A1	10/2011	Snell et al.	
2011/0245711	A1*	10/2011	Katra	A61B 5/0537 600/547
2012/0003933	A1	1/2012	Baker et al.	
2012/0029306	A1	2/2012	Paquet et al.	
2012/0029316	A1*	2/2012	Raptis	A61B 5/0002 600/301
2012/0035432	A1	2/2012	Katra et al.	
2012/0088998	A1	4/2012	Bardy et al.	
2012/0088999	A1	4/2012	Bishay et al.	
2012/0089000	A1	4/2012	Bishay et al.	
2012/0089001	A1	4/2012	Bishay et al.	
2012/0089037	A1	4/2012	Bishay et al.	
2012/0089412	A1	4/2012	Bardy et al.	
2012/0089417	A1	4/2012	Bardy et al.	
2012/0095352	A1	4/2012	Tran	
2012/0101358	A1	4/2012	Boettcher et al.	
2012/0101396	A1*	4/2012	Solosko	A61B 5/0006 600/509
2012/0165645	A1	6/2012	Russel et al.	
2012/0302906	A1	11/2012	Felix et al.	
2012/0330126	A1	12/2012	Hoppe et al.	
2013/0041272	A1	2/2013	Guillen Arredondo et al.	
2013/0077263	A1	3/2013	Oleson et al.	
2013/0079611	A1	3/2013	Besko	
2013/0085403	A1	4/2013	Gunderson et al.	
2013/0096395	A1	4/2013	Katra et al.	
2013/0116533	A1	5/2013	Lian et al.	
2013/0123651	A1	5/2013	Bardy	
2013/0158361	A1	6/2013	Bardy	
2013/0225963	A1	8/2013	Kodandaramaiah et al.	
2013/0225966	A1	8/2013	Macia Barber et al.	
2013/0243105	A1	9/2013	Lei et al.	
2013/0274584	A1*	10/2013	Finlay	A61B 5/0432 600/391
2013/0275158	A1	10/2013	Fahey	
2013/0324809	A1	12/2013	Lisogurski et al.	
2013/0324855	A1	12/2013	Lisogurski et al.	
2013/0324856	A1	12/2013	Lisogurski et al.	
2013/0325359	A1	12/2013	Jarverud et al.	
2013/0331665	A1	12/2013	Libbus et al.	
2013/0338448	A1	12/2013	Libbus et al.	
2013/0338472	A1	12/2013	Macia Barber et al.	
2014/0012154	A1	1/2014	Mazar et al.	
2014/0140359	A1	5/2014	Kalevo et al.	
2014/0189928	A1	7/2014	Oleson et al.	
2014/0206977	A1	7/2014	Bahney et al.	
2014/0215246	A1	7/2014	Lee et al.	
2014/0358193	A1	12/2014	Lyons et al.	
2015/0048836	A1	2/2015	Guthrie et al.	
2015/0065842	A1	3/2015	Lee et al.	
2015/0165211	A1	6/2015	Naqvi et al.	
2015/0177175	A1	6/2015	Elder et al.	
2015/0257670	A1	9/2015	Ortega et al.	
2015/0359489	A1*	12/2015	Baudenbacher	G06F 19/3418 600/300
2016/0217691	A1	7/2016	Kadobayashi et al.	

FOREIGN PATENT DOCUMENTS

EP	2438851	4/2012	
EP	2438852	4/2012	
EP	2465415	6/2012	
EP	2589333	5/2013	
JP	H06319711	11/1994	
JP	2004129788	4/2004	
WO	0078213	12/2000	
WO	03032192	4/2003	
WO	2006009767	1/2006	
WO	2006014806	2/2006	
WO	WO 2007066270 A2 *	6/2007	.... A61B 5/04085
WO	2007092543	8/2007	
WO	2008010216	1/2008	
WO	2008057884	5/2008	
WO	2009036306	3/2009	
WO	2009036313	3/2009	
WO	2009036327	3/2009	
WO	2009112976	9/2009	
WO	2009112978	9/2009	
WO	2009112979	9/2009	
WO	2009142975	11/2009	
WO	2010066507	6/2010	
WO	2010105045	9/2010	
WO	2011047207	4/2011	
WO	2012140559	10/2012	
WO	2012146957	11/2012	

OTHER PUBLICATIONS

Duttweiler et al., “Probability Estimation in Arithmetic and Adaptive-Huffman Entropy Coders,” IEEE Transactions on Image Processing. vol. 4, No. 3, Mar. 1, 1995, pp. 237-246.

Gupta et al., “An ECG Compression Technique for Telecardiology Application,” India Conference (INDICON), 2011 Annual IEEE, Dec. 16, 2011, pp. 1-4.

Nave et al., “ECG Compression Using Long-Term Prediction,” IEEE Transactions on Biomedical Engineering, IEEE Service Center, NY, USA, vol. 40, No. 9, Sep. 1, 1993, pp. 877-885.

Skretting et al., “Improved Huffman Coding Using Recursive Splitting,” NORSIG, Jan. 1, 1999.

(56) **References Cited**

OTHER PUBLICATIONS

15 of the Hottest Wearable Gadgets, URL <http://thehottestgadgets.com/2008/09/the-15-hottest-wearable-gadgets-001253> (Web page cached on Sep. 27, 2008).

Alivecor's Heart Monitor for iPhone Receives FDA Clearance, URL <http://www.businesswire.com/news/home/20121203005545/en/AliveCor%E2%80%99s-Heart-Monitor-iPhone-Receives-FDA-Clearance#.U7rtq7FVTyF> (Dec. 3, 2012).

Bharadwaj et al., Techniques for Accurate ECG signal processing, EE Times, URL <www.eetimes.com/document.asp?doc_id=1278571> (Feb. 14, 2011).

Chen et al., "Monitoring Body Temperature of Newborn Infants At Neonatal Intensive Care Units Using Wearable Sensors," BodyNets 2010, Corfu Island, Greece. (Sep. 10, 2010).

Epstein, Andrew E. et al.; ACC/AHA/HRS 2008 Guidelines for Device-Based Therapy of Cardiac Rhythm Abnormalities. J. Am. Coll. Cardiol. 2008; 51; el-e62, 66 Pgs.

Fitbit automatically tracks your fitness and sleep, URL <http://www.fitbit.com/> (Web page cached on Sep. 10, 2008).

Smith, Kevin, "Jawbone Up Vs. Fitbit Flex: Which Is the Best Fitness Band?" URL <http://www.businessinsider.com/fitbit-flex-vs-jawbone-up-2013-5?op=1> (Jun. 1, 2013).

Kligfield, Paul et al., Recommendations for the Standardization and Interpretation of the Electrocardiogram: Part I. J.Am.Coll. Cardiol; 2007; 49; 1109-27, 75 Pgs.

Lauren Gravitz, "When Your Diet Needs a Band-Aid," Technology Review, MIT. (May 1, 2009).

Lieberman, Jonathan, "How Telemedicine Is Aiding Prompt ECG Diagnosis in Primary Care," British Journal of Community Nursing, vol. 13, No. 3, Mar. 1, 2008 (Mar. 1, 2008), pp. 123-126, XP009155082, ISSN: 1462-4753.

McManus et al., "A Novel Application for the Detection of an Irregular Pulse using an iPhone 4S in Patients with Atrial Fibrillation," vol. 10(3), pp. 315-319 (Mar. 2013).

Nike+ Fuel Band, URL <http://www.nike.com/us/en_us/c/nikeplus-fuelband> (Web page cached on Jan. 11, 2013).

P. Libby et al.,"Braunwald's Heart Disease—ATextbook of Cardiovascular Medicine," Chs. 11, pp. 125-148 and 12, pp. 149-193 (8th ed. 2008), American Heart Association.

Initial hands-on with Polar Loop activity tracker, URL <http://www.dcrainmaker.com/2013/09/polar-loop-firstlook.html> (Sep. 17, 2013).

Sittig et al., "A Computer-Based Outpatient Clinical Referral System," International Journal of Medical Informatics, Shannon, IR, vol. 55, No. 2, Aug. 1, 1999, pp. 149-158, XO004262434, ISSN: 1386-5056(99)00027-1.

Sleepview, URL <http://www.clevemed.com/sleepview/overview.shtml> (Web pages cached on Feb. 23, 2010, Dec. 29, 2012 and Sep. 4, 2013).

Actigraphy/ Circadian Rhythm SOMNOwatch, URL <http://www.somnomedics.eu/news-events/publications/somnowatchtm.html> (Web page cached on Jan. 23, 2010).

Zio Event Card, URL <http://www.irhythmtech.com/zio-solution/zio-event/> (Web page cached on Mar. 11, 2013).

Zio Patch System, URL <http://www.irhythmtech.com/zio-solution/zio-system/index.html> (Web page cached on Sep. 8, 2013).

Seifert, Dan, "Samsung dives into fitness wearable with the Gear Fit/ The Verge," URL <http://www.theverge.com/2014/2/24/5440310/samsung-dives-into-fitness-wearables-with-the-gear-fit> (Feb. 24, 2014).

Soper, Taylor, "Samsung's new Galaxy S5 flagship phone has fingerprint reader, heart rate monitor," URL <http://www.geekwire.com/2014/samsung-galaxy-s5-fingerprint> (Feb. 24, 2014).

Dolcourt, Jessica, "See the Samsung Galaxy S5's Heart rate monitor in action," URL <http://www.cnet.com/news/see-the-samsung-galaxy-s5s-heart-rate-monitor-in-action> (Feb. 25, 2014).

Saadi et al. "Heart Rhythm Analysis Using ECG Recorded With a Novel Sternum Based Patch Technology—A Pilot Study." Cardio technix 2013—Proceedings of the International Congress on Cardiovascular Technologies, Sep. 20, 2013.

Anonymous. "Omegawave Launches Consumer App 2.0 in U.S. Endurance Sportswire—Endurance Sportswire." Jul. 11, 2013. URL:http://endurancesportswire.com/omegawave-launches-consumer-app-2-0-in-u-s/.

Chan et al. "Wireless Patch Sensor for Remote Monitoring of Heart Rate, Respiration, Activity, and Falls." pp. 6115-6118. 2013 35th Annual International Conference of the IEEE Engineering in Medical and Biology Society. Jul. 1, 2013.

Wei et al. "A Stretchable and Flexible System for Skin-Mounted Measurement of Motion Tracking and Physiological Signals." pp. 5772-5775. 2014 36th Annual International Conference of the IEEE Engineering in Medicine and Biology Society. Aug. 26, 2014.

Daoud et al. "Fall Detection Using Shimmer Technology and Multiresolution Analysis." Aug. 2, 2013. URL: https://decibel.ni.com/content/docs/DOC-26652.

Libbus. "Adherent Cardiac Monitor With Wireless Fall Detection for Patients With Unexplained Syncope." Abstracts of the First AMA—IEEE Medical Technology Conference on Individualized Healthcare. May 22, 2010.

A Voss et al., "Linear and Nonlinear Methods for Analyses of Cardiovascular Variability in Bipolar Disorders," Bipolar Disorders, votl. 8, No. 5p1, Oct. 1, 2006, pp. 441-452, XP55273826, DK ISSN: 1398-5647, DOI: 10.1111/.1399-5618.2006.00364.x.

"Varicrad-Kardi Software User's Manual Rev. 1.1", Jul. 8, 2009 (Jul. 8, 2009), XP002757888, retrieved from the Internet: URL:http://www.ehrlich.tv/KARDiVAR-Software.pdf [retrieved on May 20, 2016].

"Vedapulse UK," Jan. 1, 2014 (Jan. 1, 2014), XP002757887, Retrieved from the Internet: URL:http://www.vedapulseuk.com/diagnostic/ [retrieved on May 19, 2016].

Health Research—Hexoskin Biometric Shirt | Hexoskin URL:http://www.hexoskin.com/pages/health-research (Web page cached on Dec. 2, 2014).

Jacob Kastrenakes, "Apple Watch uses four sensors to detect your pulse," Sep. 9, 2014. URL: http://www.theverge.com/2014/9/9/6126991/apple-watch-four-back-sensors-detect-activity.

Nicole Lee, "Samsung Gear S review: an ambitious and painfully flawed smartwatch," Dec. 1, 2014. URL:http://www.engadget.com/2014/12/01/samsung-gear-s-review/.

* cited by examiner

Fig. 1.

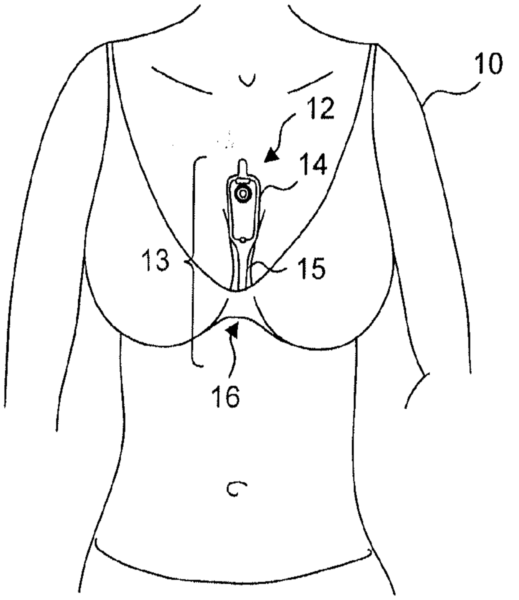

Fig. 2.

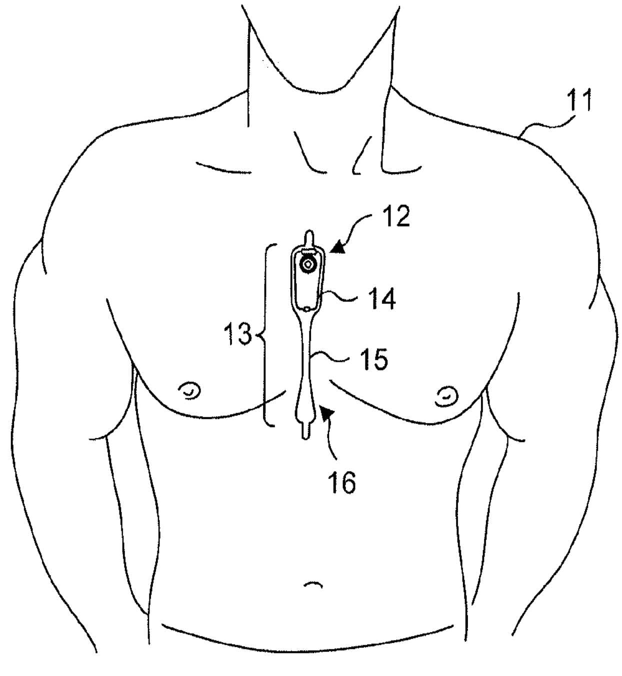

Fig. 3.

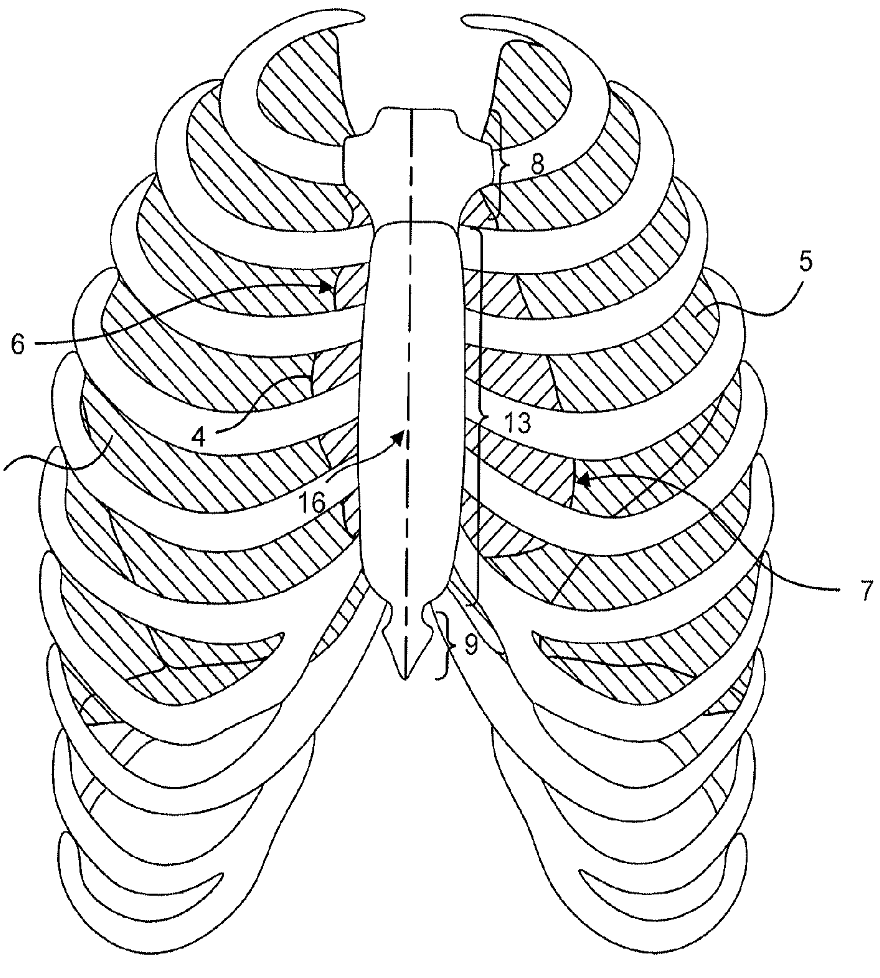

Fig. 4.

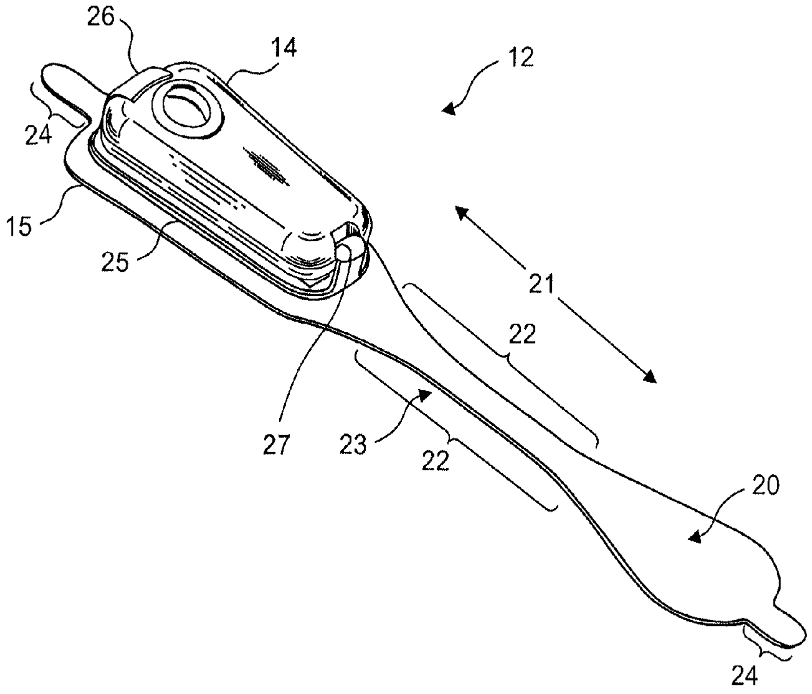

Fig. 5.

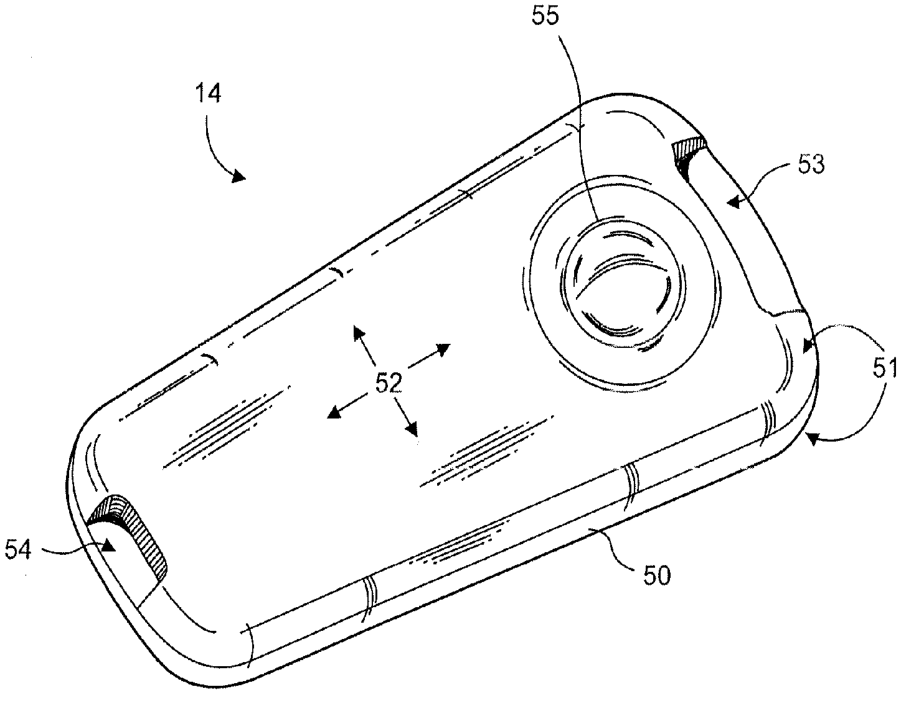

Fig. 6.

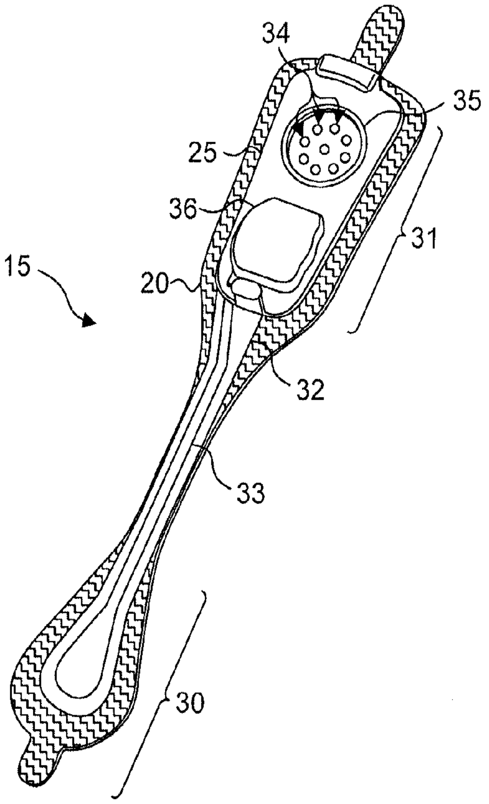

Fig. 7.

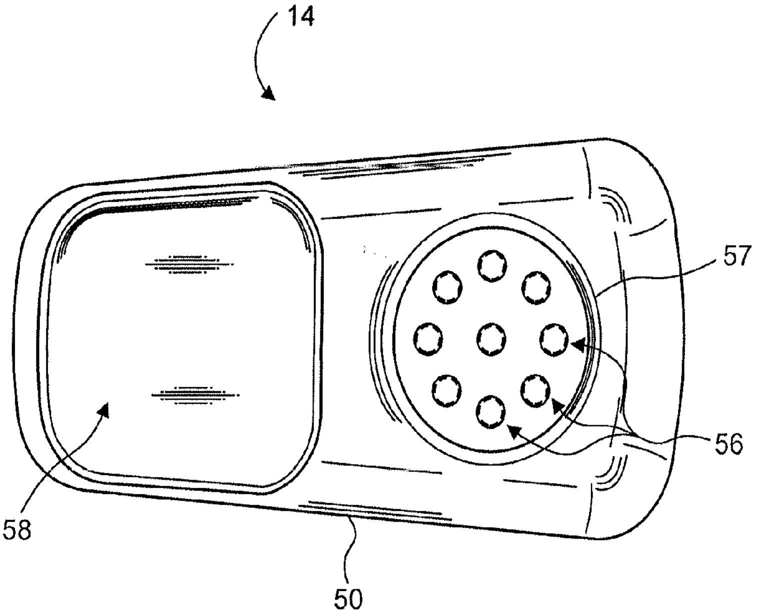

Fig. 8.

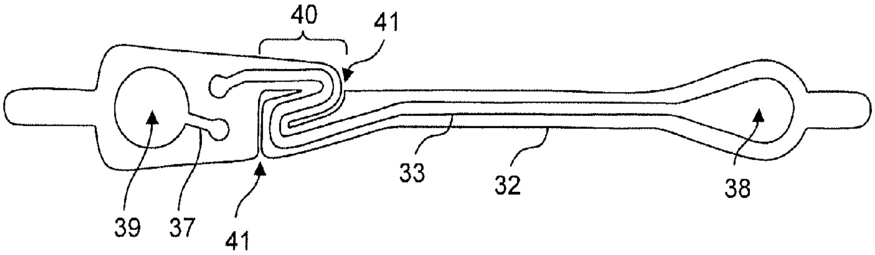

Fig. 9.

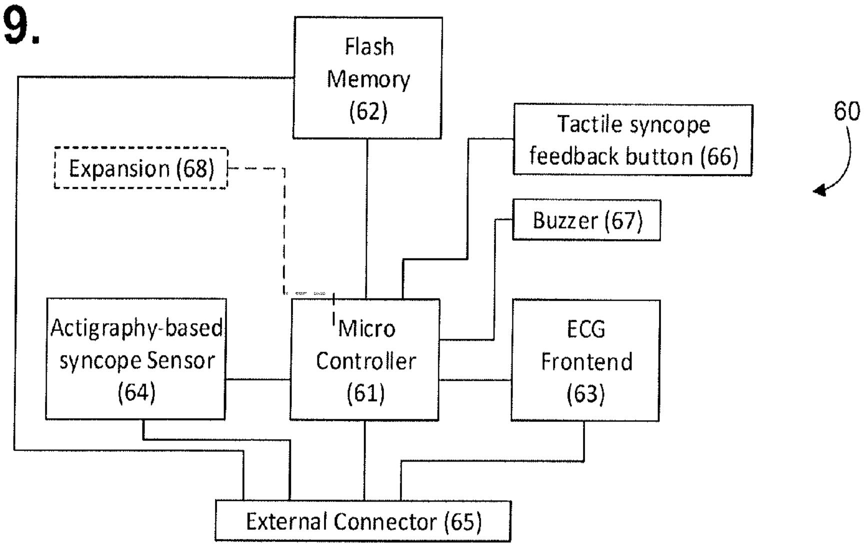

Fig. 10.

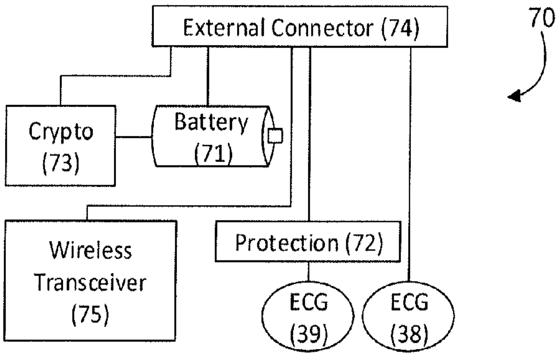

Fig. 11.

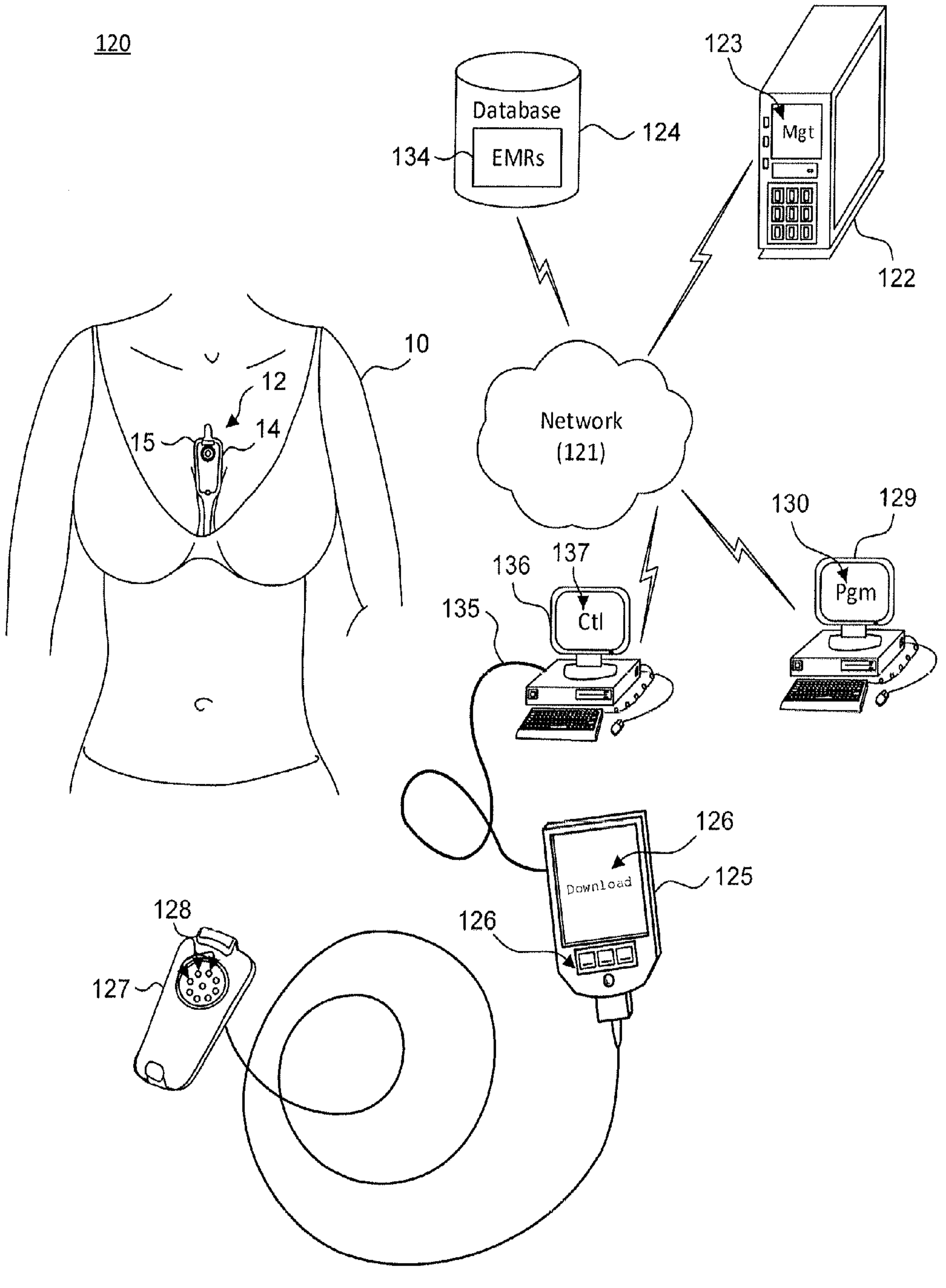
120
123
Database
124
134
EMRs
Mgt
122
10
12
Network
(121)
15
14
130
129
136
137
135
Ctl
Pgm
126
Download
125
128
126
127

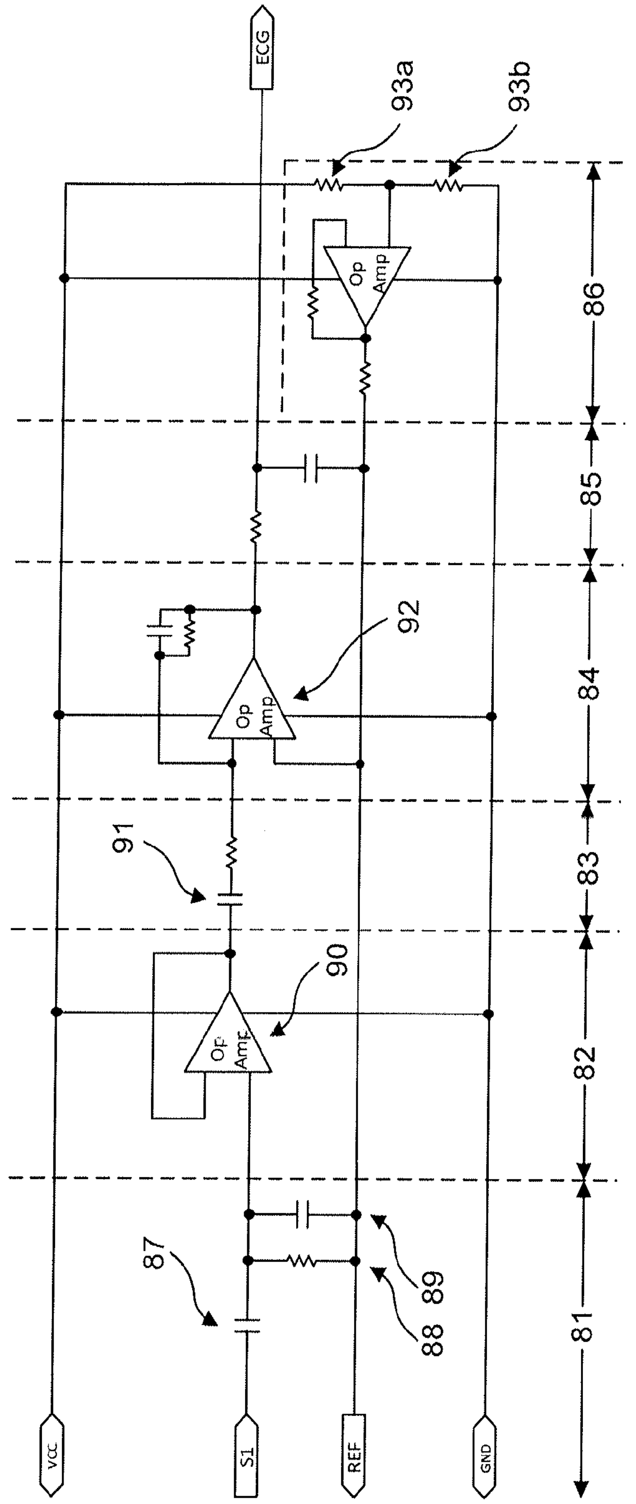
ECG
93a
93b
Op Amp
86
85
92
Op Amp
84
91
83
90
Op Amp
82
87
89
88
81
VCC
S1
REF
GND

Fig. 12.

80

Fig. 13.

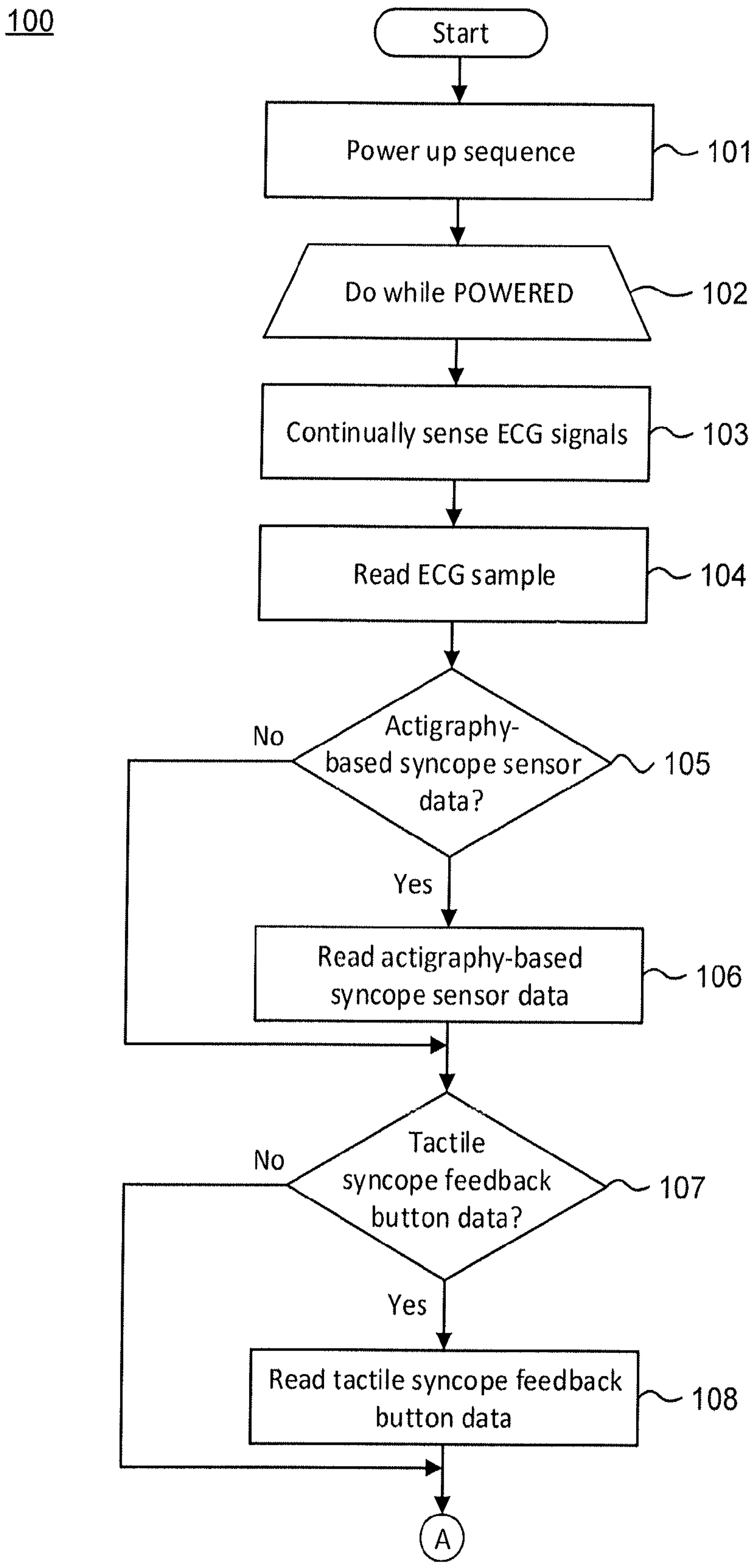
100
Start
Power up sequence
101
Do while POWERED
102
Continually sense ECG signals
103
Read ECG sample
104
Actigraphy-based syncope sensor data?
105
No
Yes
Read actigraphy-based syncope sensor data
106
Tactile syncope feedback button data?
107
No
Yes
Read tactile syncope feedback button data
108
A

Fig. 13. (Con'd)

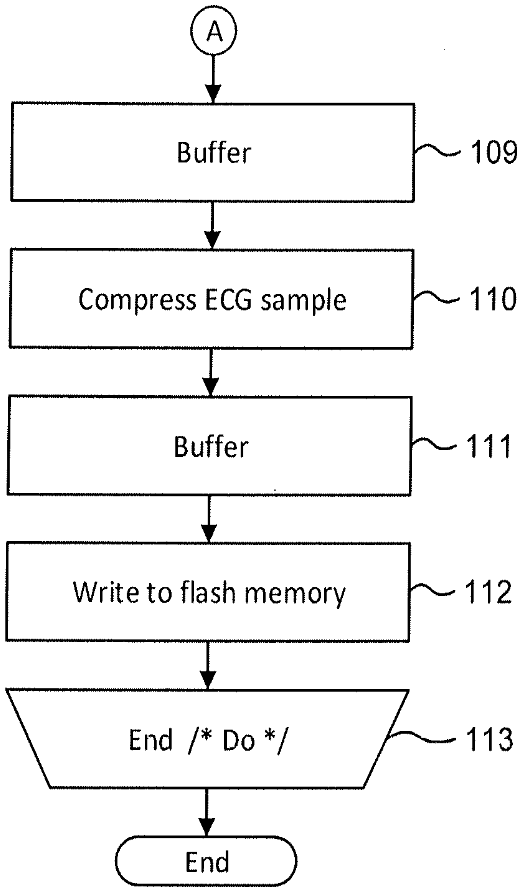
A
Buffer
109
Compress ECG sample
110
Buffer
111
Write to flash memory
112
End /* Do */
113
End

Fig. 14.

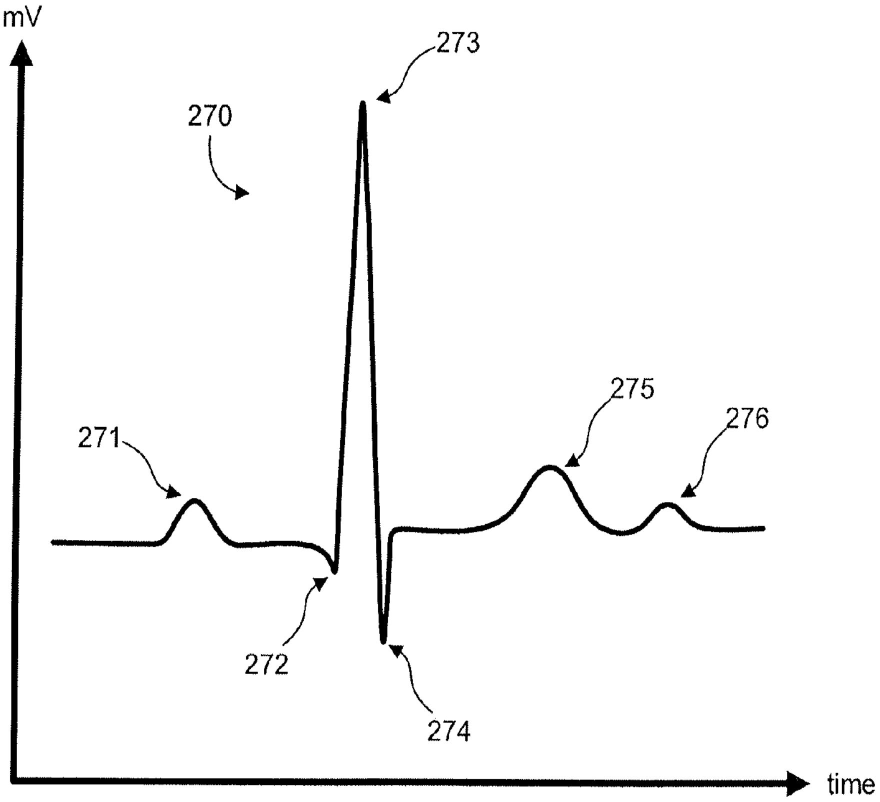

Fig. 15.

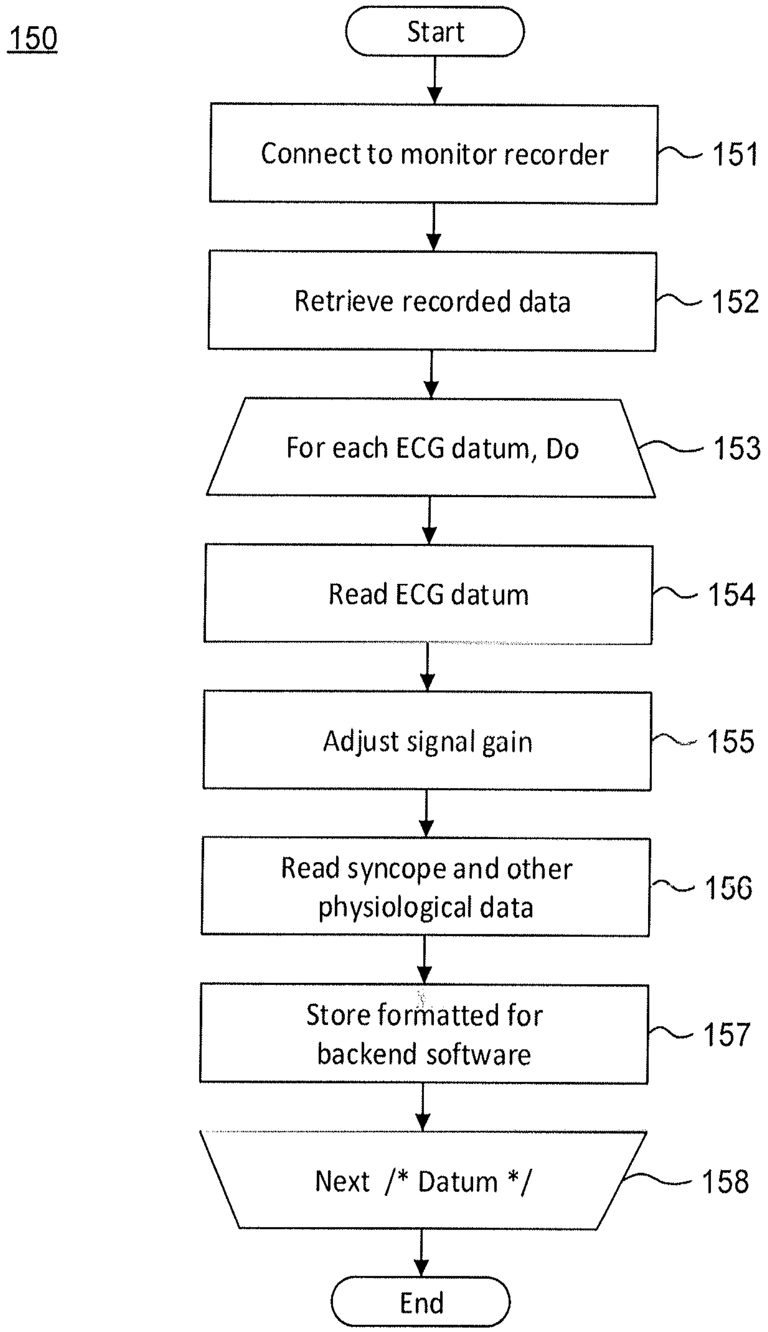
150
Start
Connect to monitor recorder
151
Retrieve recorded data
152
For each ECG datum, Do
153
Read ECG datum
154
Adjust signal gain
155
Read syncope and other physiological data
156
Store formatted for backend software
157
Next /* Datum */
158
End

Fig. 16.

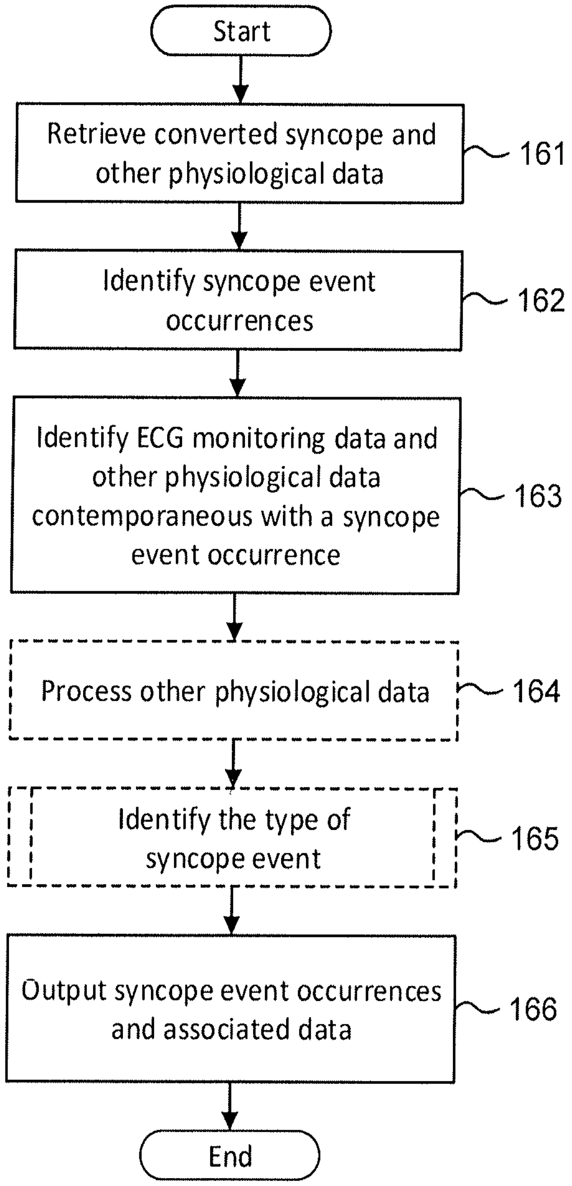
160
Start
Retrieve converted syncope and other physiological data
161
Identify syncope event occurrences
162
Identify ECG monitoring data and other physiological data contemporaneous with a syncope event occurrence
163
Process other physiological data
164
Identify the type of syncope event
165
Output syncope event occurrences and associated data
166
End

Fig. 17.

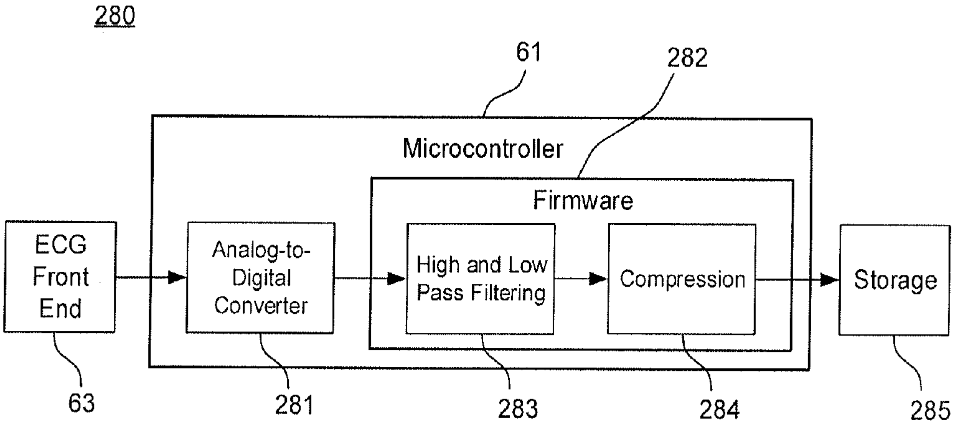
280
61
282
Microcontroller
Firmware
ECG Front End
Analog-to-Digital Converter
High and Low Pass Filtering
Compression
Storage
63
281
283
284
285

Fig. 18.

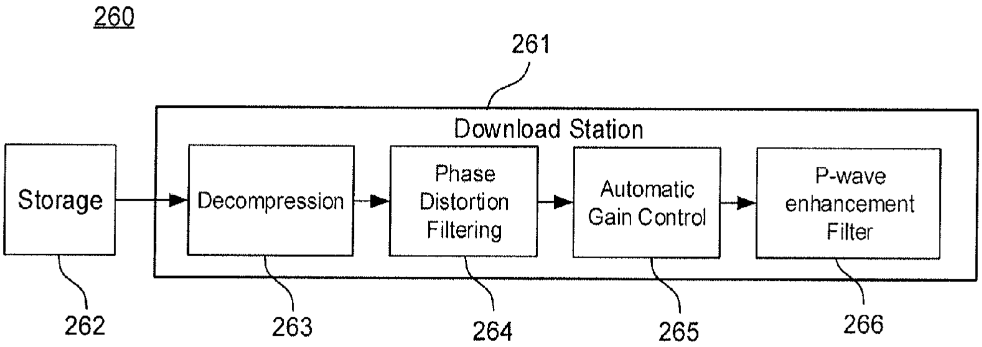
260
261
Download Station
Storage
Decompression
Phase Distortion Filtering
Automatic Gain Control
P-wave enhancement Filter
262
263
264
265
266

Fig. 19.

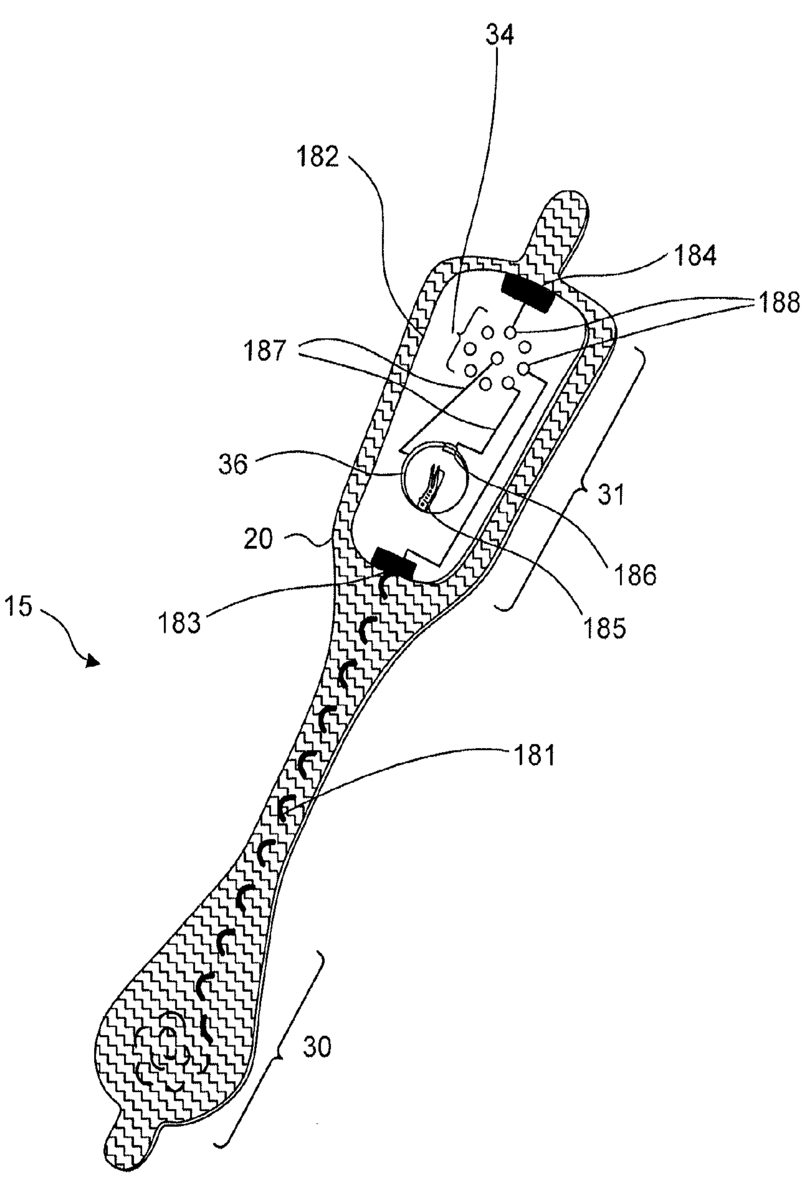

Fig. 20.

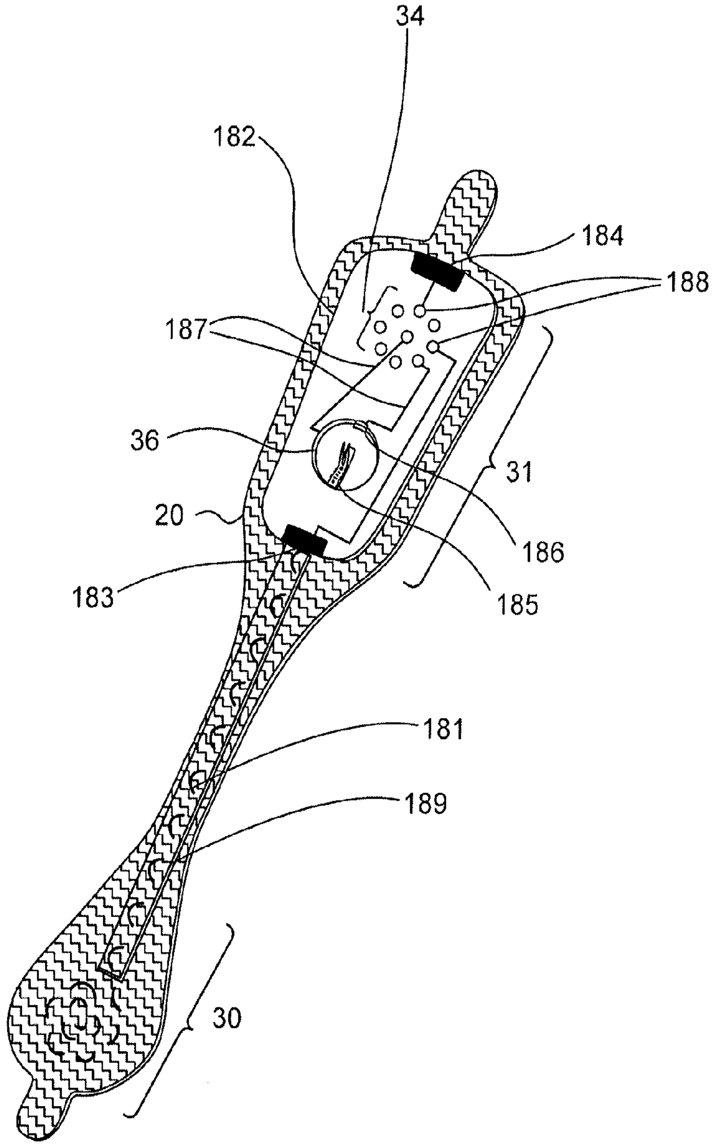

Fig. 21.

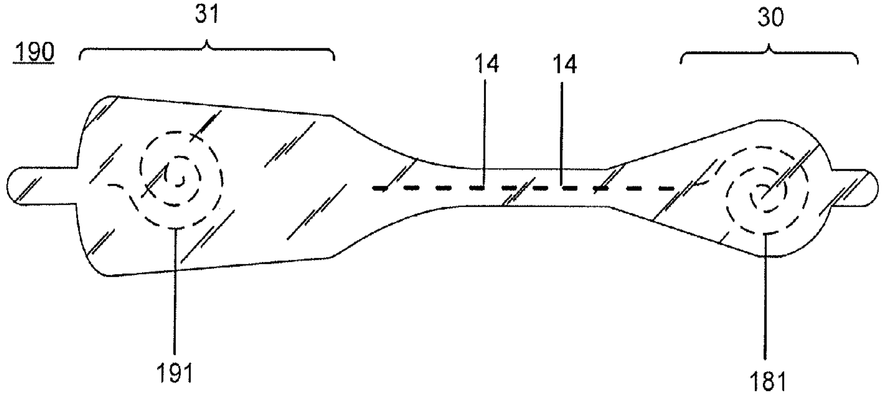

Fig. 22.

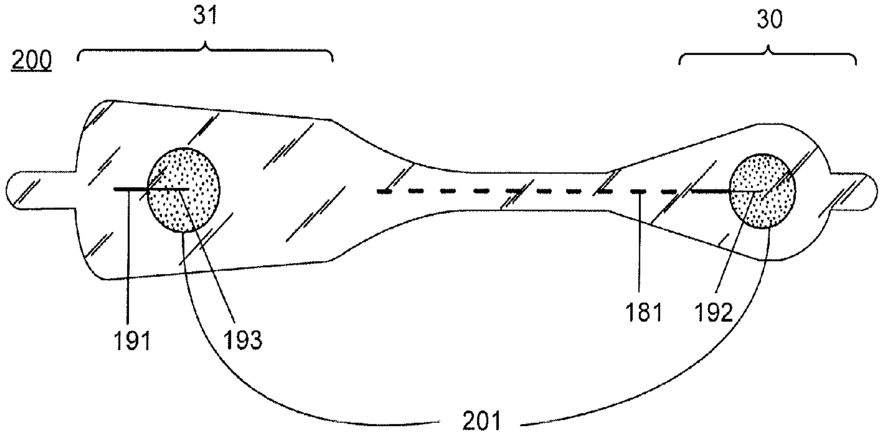

Fig. 23.

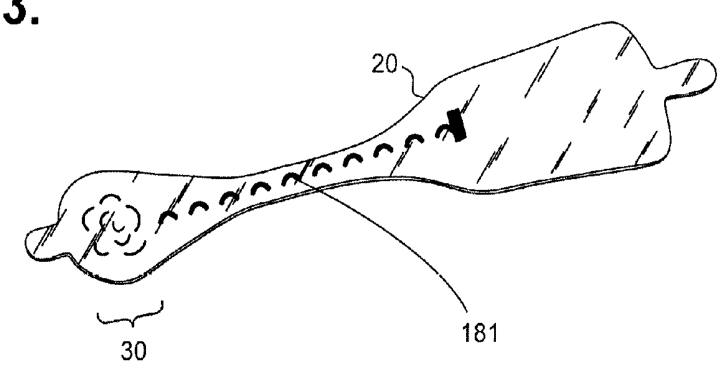

Fig. 24A.

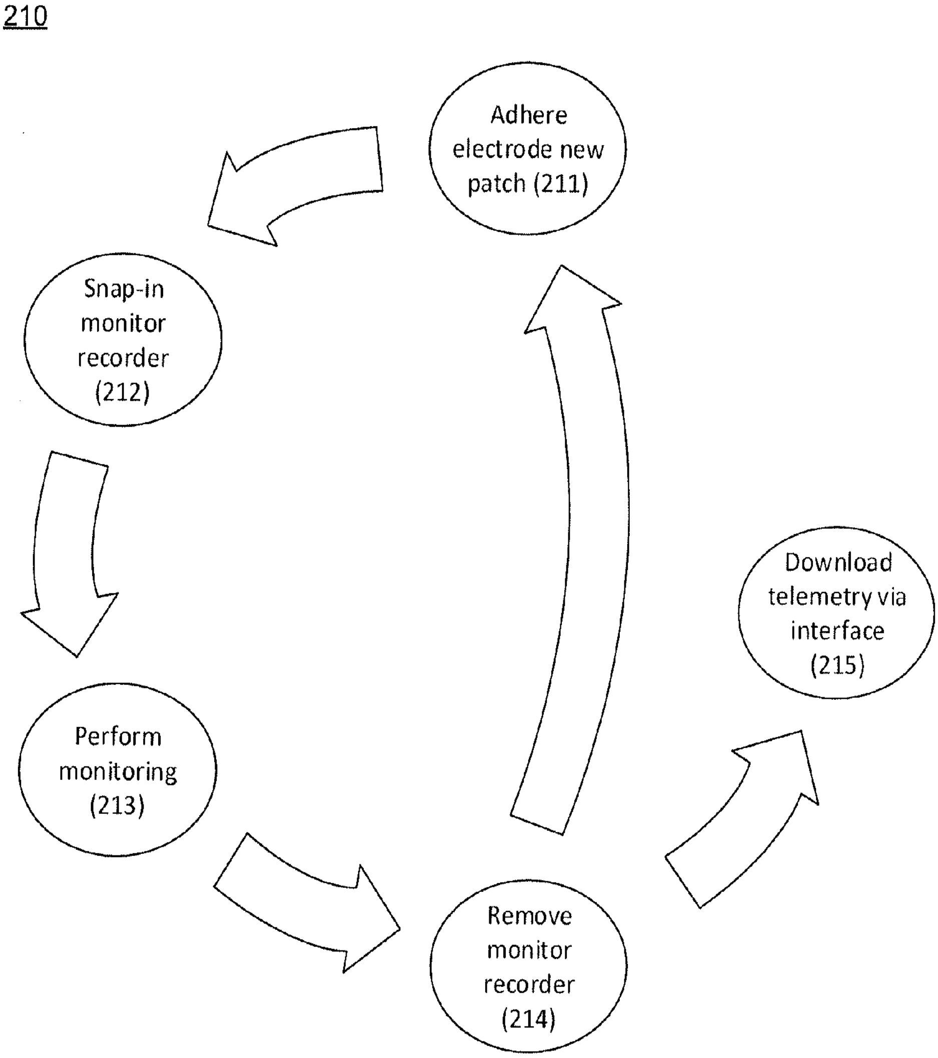
210
Adhere electrode new patch (211)
Snap-in monitor recorder (212)
Perform monitoring (213)
Remove monitor recorder (214)
Download telemetry via interface (215)

Fig. 24B.

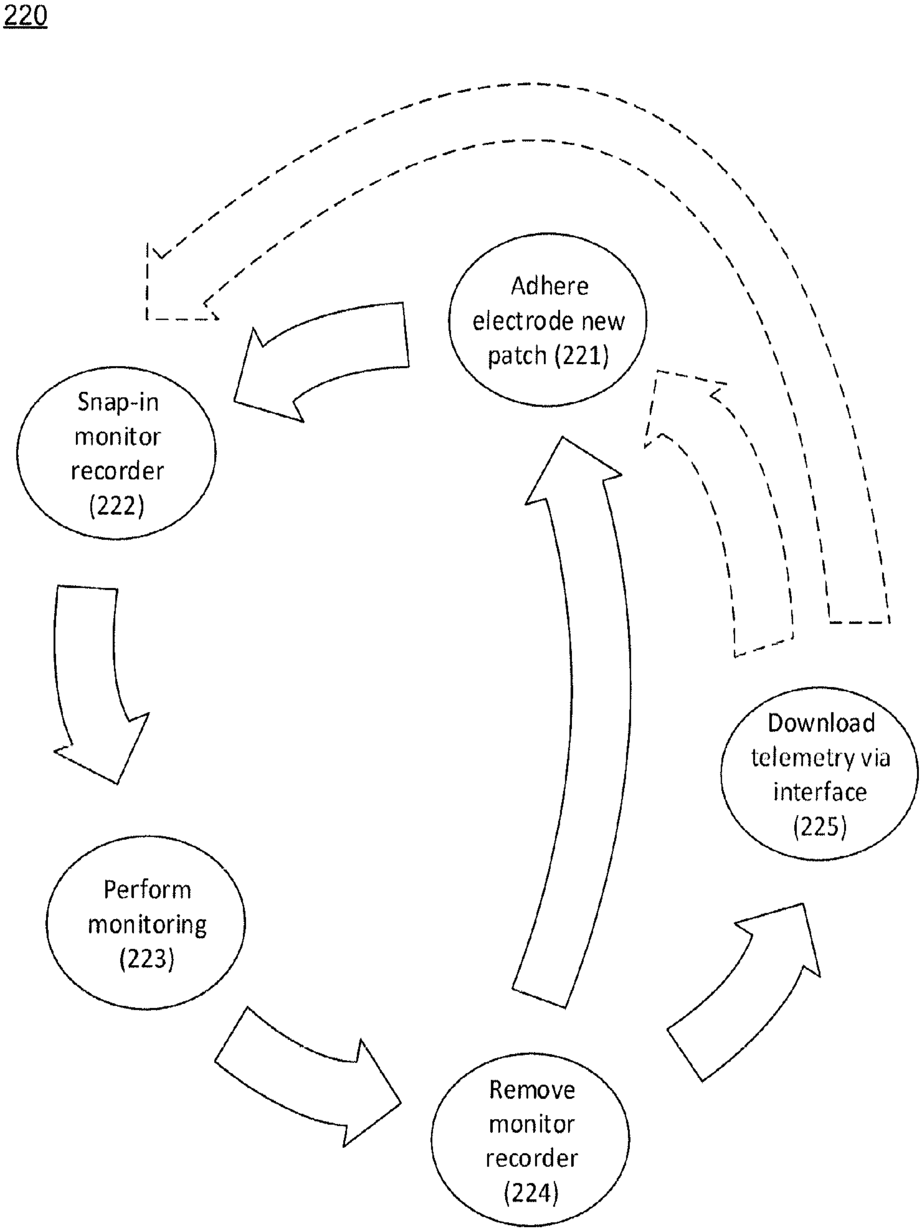
220
Adhere electrode new patch (221)
Snap-in monitor recorder (222)
Perform monitoring (223)
Remove monitor recorder (224)
Download telemetry via interface (225)

Fig. 24C.

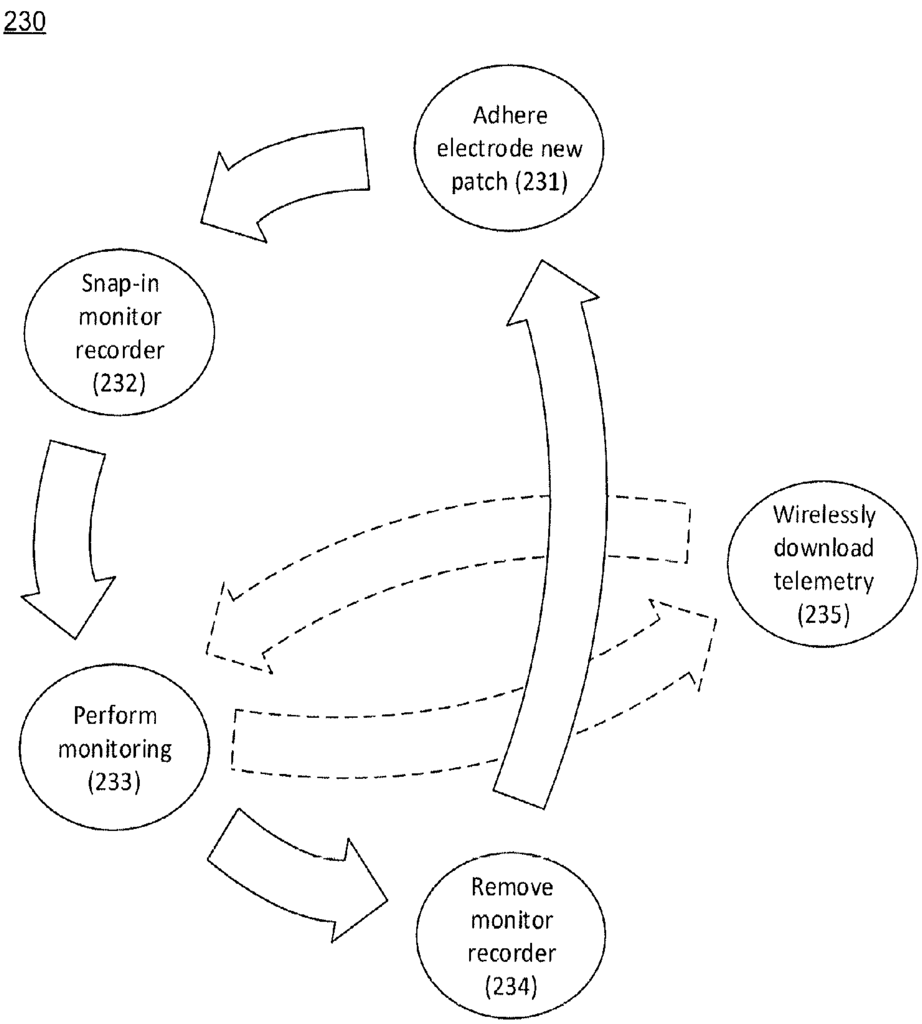
230
Adhere electrode new patch (231)
Snap-in monitor recorder (232)
Perform monitoring (233)
Remove monitor recorder (234)
Wirelessly download telemetry (235)

Fig. 25.

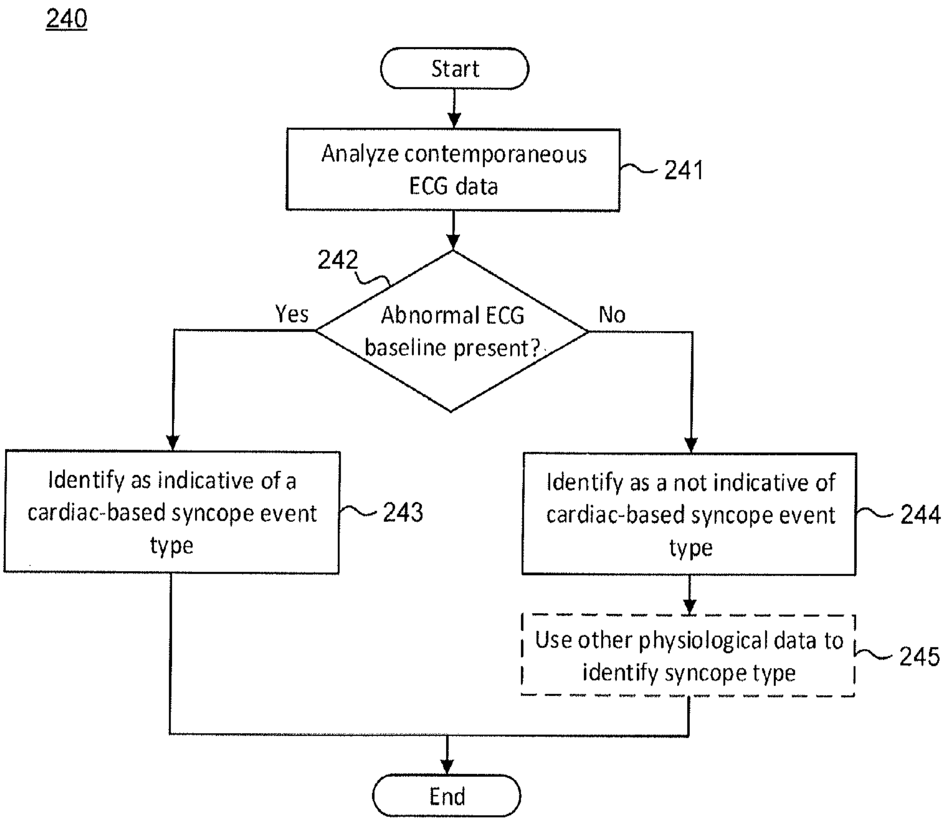
240
Start
Analyze contemporaneous ECG data
241
242
Abnormal ECG baseline present?
Yes
No
Identify as indicative of a cardiac-based syncope event type
243
Identify as a not indicative of cardiac-based syncope event type
244
Use other physiological data to identify syncope type
245
End

AMBULATORY EXTENDED-WEAR ELECTROCARDIOGRAPHY AND SYNCOPE SENSOR MONITOR

CROSS-REFERENCE TO RELATED APPLICATION

This non-provisional patent application is a continuation-in-part of U.S. patent application Ser. No. 14/082,108, filed Nov. 16, 2013, pending, which is a continuation-in-part of U.S. patent application Ser. No. 14/080,717, filed Nov. 14, 2013, pending, and a continuation-in-part of U.S. patent application Ser. No. 14/080,725, filed Nov. 14, 2013, pending, which further claims priority under 35 U.S.C. §119(e) to U.S. Provisional Patent application, Ser. No. 61/882,403, filed Sep. 25, 2013, the disclosures of which are incorporated by reference; this non-provisional patent application is also a continuation-in-part of U.S. patent application Ser. No. 14/488,230, filed Sep. 16, 2014, pending, which is a continuation-in-part of U.S. patent application Ser. No. 14/080,725, filed Nov. 14, 2013, pending, and further claims priority under 35 U.S.C. §119(e) to U.S. Provisional Patent application, Ser. No. 61/882,403, filed Sep. 25, 2013, the disclosures of which are incorporated by reference.

FIELD

This application relates in general to physiological monitoring and, in particular, to an ambulatory, extended-wear electrocardiography and syncope sensor monitor.

BACKGROUND

An ECG measures the electrical signals emitted by the heart, which are generated by propagation of action potentials that trigger depolarization of heart fibers. Physiologically, transmembrane ionic currents are generated within the heart during cardiac electrical signals from well-established, traditional chest locations. Cardiac depolarization originates high in the right atrium in the sinoatrial (SA) node before spreading leftward towards the left atrium and inferiorly towards the atrioventricular (AV) node. After a delay occasioned by the AV node, the depolarization impulse transits the Bundle of His and moves into the right and left bundle branches as well as Purkinje fibers to activate the right and left ventricles.

During each cardiac cycle, the ionic currents create an electrical field in and around the heart, which can be detected by ECG electrodes placed on the skin over the anterior thoracic region of the patient's body to the lower right and to the lower left of the sternum on the left anterior chest and on the limbs. Cardiac electrical activity is then visually represented in an ECG trace by PQRSTU-waveforms, which can be interpreted post-ECG recordation to derive heart rate and physiology. The P-wave represents atrial electrical activity, and the QRSTU components represent ventricular electrical activity. Specifically, a P-wave represents atrial depolarization, which causes atrial contraction.

P-wave analysis based on ECG monitoring is critical to accurate cardiac rhythm diagnosis and focuses on localizing the sites of origin and pathways underlying arrhythmic conditions. Certain arrhythmias can cause a clinical problem referred to as syncope. Syncope, or a transient loss of consciousness with spontaneous recovery, is often caused by a dramatic drop in blood pressure that leads to a loss of consciousness due to cerebral hypofusion. Conditions that produce cardiac-based syncope are often serious, may be harbingers of sudden death, and can require serious therapy. Such conditions include high-grade AV block, which can lead to an abrupt loss of consciousness and is diagnosed based on the relative position and temporal association of the P-wave with the QRS-wave. Transient ventricular tachycardia is another such condition that can result in syncope where there is a rapid ventricular response (with a series of rapid QRS signals) that is disassociated from atrial activity or the P-wave. However, not all episodes of high-grade AV block or ventricular tachycardia result in syncope; some superficially similar arrhythmias are better tolerated than other arrhythmias, even in the same patient. Often to know from the specific type of arrhythmia alone whether or not syncope will occur is not possible.

Cardiac rhythm disorders are often sporadic and may not occur in-clinic during a conventional 12-second ECG. Syncope episodes can be especially sporadic and infrequent; further, these episodes are problematic because they are common, costly, often disabling, may cause injury, and may be the only warning sign prior to sudden cardiac death (SCD). Establishing the underlying cause of these episodes is important because the cause greatly influences the treatment and prognosis. Cardiac-based syncope portends the highest mortality, in contrast to neurally mediated syncope, such as vasodepressor syncope, or where the patient presents with an apparent syncope episode that is not true syncope, but is due to an alternative physiological condition, including metabolic conditions, such as hypoglycemia; neurological causes, such as seizures; and psychiatric disorders. Moreover, syncope can arise slowly or abruptly. A patient who is gradually aware that he or she may lose consciousness is less prone to injury. However, an abrupt loss of consciousness is much more dangerous because a person with abrupt syncope may be standing and fall suddenly, leading to injury. Therefore, knowing whether or not a condition will likely cause a fall is valuable in properly managing patients, regardless of the basis.

The diagnosis, prognosis, and treatment of syncope can be improved through concomitant recording of syncope episodes as well as ECG data. Where syncope episodes are based on a cardiac condition, diagnosis and treatment are especially important due to the higher mortality rate correlated with cardiac-based syncope episodes. Moreover, both cardiac-based and neurally mediated syncope episodes may require a different treatments. For cardiac arrhythmia-induced syncope, a pace-maker might be helpful, whereas for neurally mediated syncope, a specific drug therapy may be helpful. Correlating motor activity and cardiovascular ECG data is important for improving diagnostic specificity as well as guiding therapy. Moreover, such combined sensor technology can optimize and improve monitoring recommendations during recovery or rehabilitation programs.

Further, combining an ECG recorder with a syncope detection mechanism that detects a sudden collapse is especially valuable because the combination can aid in including (or excluding) a basis for cardiac arrhythmia and inform the doctor on the seriousness of a condition where the recorder can identify falls due to arrhythmia. Continuous ECG monitoring with P-wave-centric action potential acquisition over an extended time period is more likely to elucidate sporadic cardiac events that can be specifically identified and diagnosed, including cardiac events that produce syncope. A longer monitoring period enhances the likelihood of diagnosing an episodic arrhythmia responsible for an episodic syncope episode. However, recording sufficient ECG and physiological data continuously over an extended time period to both diagnose an arrhythmia and syncope that produces a fall remains a technical challenge on multiple levels: cost, comfort, reliability, and both rhythm as well as fall accuracy.

An example of this technical challenge can be seen with actigraphy sensors, such as accelerometers, which can be used to detect movements that occur during syncope episodes, such as falls and sudden postural changes that a patient may experience during a syncope episode while sitting down. Different kinds of actigraphs exist. For example, sleep actigraphs are typically worn similar to a watch on the wrist of the non-dominant arm and can be worn for weeks. Activity actigraphs are worn and used similar to a pedometer, around the waist and near the hip; they are useful in determining the level of activity as well as, potentially, calories and can be worn for a number of days. Movement actigraphs are typically larger and are worn on the shoulder of the dominant arm. Further, movement actigraphs include 3-D actigraphs, which are distinct from 1-D actigraphs that are used during sleep as well as activity actigraphy and tend to include a high sample rate as well as large memory; thus, they are often only used for a few hours. However, wearing two separate devices, one for ECG and another for collecting actigraphy to detect syncope episodes, creates problems. For example, recordings from two separate devices are not synchronized, which could result in temporally mismatched movements indicative of syncope and ECG data.

Current combined actigraphy and ECG monitors are similarly lacking in meeting the technical challenge. For example, U.S. Pat. No. 8,460,189, to Libbus et al. ("Libbus") discloses an adherent wearable cardiac monitor that includes at least two measurement electrodes and an accelerometer. The device includes a reusable electronics module and a disposable adherent patch, which includes the electrodes. ECG monitoring can be conducted using multiple disposable patches adhered to different locations on the patient's body. The device includes a processor configured to control data collection and transmission from the ECG circuitry, including generating and processing ECG signals as well as data acquired from two or more electrodes. The ECG circuitry and electrodes can be coupled in multiple ways to define an ECG vector; further, the ECG vector orientation can be determined in response to the measuring electrodes' polarity and the orientation of the electrode measurement axis. The accelerometer can be used to determine the orientation of the measuring electrodes at each location. The ECG signals measured at different locations can be rotated based on the accelerometer data to modify the amplitude and direction of the ECG features to approximate a standard ECG vector. The signals recorded at different locations can be combined by summing a scaled version of each signal. Libbus further discloses that inner ECG electrodes may be positioned near outer electrodes to increase the voltage of the measured ECG signals. However, Libbus treats ECG signal acquisition as measuring a simple aggregate directional data signal without differentiating between the distinct types of cardiac electrical activities presented by an ECG waveform, particularly atrial (P-wave) activity. Further, Libbus does not address using the accelerometer data to identify movements that could be indicative of syncope.

Similarly lacking is the SOMNOwatch™ manufactured by SOMNOmedics, a wearable watch-shaped monitoring device that records sleep actigraphy, recognizes sleep/wake rhythms, records activity actigraphs, aids attention deficit and hyperactivity disorder (ADHD) diagnosis, reads ECGs, and records heart rate. The SOMNOwatch™ can only store raw data from a single channel ECG for up to 18 hours, requires a software system that synchronizes heart rate with motor activity, and does not record specific movements, limiting the usefulness of the device for detecting syncope episodes through recognition of movements indicative of syncope, such as falls and sudden postural changes.

Therefore, a need remains for a low-cost, extended-wear, continuously recording ECG monitor coupled with a syncope sensor attuned to detecting low-amplitude cardiac action potential propagation for arrhythmia diagnosis, particularly through atrial activation P-waves, that is practicably feasible for long-term wear and correlating cardiovascular events with movements indicative of syncope or a loss of consciousness.

SUMMARY

ECG and syncope monitoring can be provided through a lightweight wearable monitor that permits detection of syncope events, events indicative of syncope episodes, and collecting ECG data contemporaneous to the events. The monitor includes two components, a flexible extended wear electrode patch and a reusable monitor recorder that removably snaps into a receptacle on the electrode patch and includes a syncope detector. The wearable monitor sits centrally (in the midline) on the patient's chest along the sternum oriented top-to-bottom. The ECG electrodes on the electrode patch are tailored to be positioned axially along the midline of the sternum for capturing action potential propagation in an orientation that corresponds to the aVF lead used in a conventional 12-lead ECG that is used to sense positive or upright P-waves. The placement of the wearable monitor in a location at the sternal midline (or immediately to either side of the sternum), with its unique, narrow hourglass shape, significantly improves the ability of the wearable monitor to cutaneously sense cardiac electrical potential signals, particularly the P-wave (or atrial activity) and, to a lesser extent, the QRS interval signals indicating ventricular activity in the ECG waveforms. The monitor includes a syncope sensor capable of detecting the syncope events. The syncope sensor can include an actigraphy sensors that can movements indicative of syncope, such as falls and sudden posture changes. The syncope sensor can also include a patient-mediated tactile feedback syncope button, which the patient can press to indicate an onset of a syncope episode.

Moreover, the electrocardiography monitor offers superior patient comfort, convenience and user-friendliness. The electrode patch is specifically designed for ease of use by a patient (or caregiver); assistance by professional medical personnel is not required. The patient is free to replace the electrode patch at any time and need not wait for a doctor's appointment to have a new electrode patch placed. Patients can easily be taught to find the familiar physical landmarks on the body necessary for proper placement of the electrode patch. Doing so is nearly intuitive and within the grasp of most any person of nearly any age and ability. Empowering patients with the knowledge to place the electrode patch in the right place ensures that the ECG electrodes will be correctly positioned on the skin, no matter the number of times that the electrode patch is replaced. In addition, the monitor recorder operates automatically, and the patient only need snap the monitor recorder into place on the electrode patch to initiate ECG monitoring. Thus, the synergistic combination of the electrode patch and monitor recorder makes the use of the electrocardiography monitor in a reliable and virtually foolproof way to monitor a patient's ECG and physiology for an extended, or even open-ended, period of time. Moreover, ECG monitoring through this combination concomitant with monitoring for syncope episodes extends the duration for detection and, thus, the ability of patients and physicians determine the causes underlying syncope, which can be difficult because syncope episodes are often sporadic and infrequent.

One embodiment provides an ambulatory, extended-wear electrocardiography and syncope sensor monitor recorder, which includes a sealed housing adapted to be removably secured into a non-conductive receptacle on a disposable extended wear electrode patch. Further, the recorder includes electronic circuitry within the sealed housing, which includes an externally-powered, low-power microcontroller that is operable to execute under microprogrammable control as specified in a firmware. The electronic circuitry further includes an electrocardiographic front end circuit electrically interfaced to the microcontroller and operable to sense electrocardiographic signals through electrocardiographic electrodes that are provided on the disposable extended wear electrode patch. Each of the electrocardiographic electrodes is adapted to be positioned axially along the midline of the sternum to capture action potential propagation. In addition, the circuitry includes a syncope sensor that is electrically interfaced with the microcontroller and operable to sense syncope events, which are events that are indicative of a syncope episode. Finally, the recorder includes an externally-powered flash memory electrically that is interfaced with the microcontroller and operable to store samples of the electrocardiographic signals and sensed syncope data.

A further embodiment provides an ambulatory, extended-wear electrocardiography and syncope sensor monitor optimized for capturing low amplitude cardiac action potential propagation, which includes a disposable extended wear electrode patch. The patch is composed of a flexible backing that is formed from an elongated strip of stretchable material with a narrow longitudinal midsection and, on each end, a contact surface at least partially coated with an adhesive dressing provided as a crimp relief. The patch also includes a pair of electrocardiographic electrodes that are conductively exposed on the contact surface at each end of the elongated strip; a non-conductive receptacle that is adhered to an outward-facing end of the elongated strip and comprising a plurality of electrical pads; and a flexible circuit that is affixed on each end of the elongated strip for strain relief and that includes a pair of circuit traces, which are electrically coupled to the pair of electrocardiographic electrodes and a pair of the electrical pads. The monitor further includes a sealed housing adapted to be removably secured into a non-conductive receptacle on a disposable extended wear electrode patch and an electronic circuitry within the sealed housing. The sealed housing includes an externally-powered, low-power microcontroller that is operable to execute under microprogrammable control as specified in a firmware. The housing also includes an electrocardiographic front end circuit that is electrically interfaced to the microcontroller and operable to sense electrocardiographic signals through electrocardiographic electrodes, which are provided on the disposable extended wear electrode patch. Each of the electrocardiographic electrodes is adapted to be positioned axially along the midline of the sternum to capture action potential propagation. Finally, the monitor includes a syncope sensor, which is electrically interfaced with the microcontroller and operable to sense syncope events, as well as an externally-powered flash memory, which is electrically interfaced with the microcontroller and operable to store samples of the electrocardiographic signals and sensed syncope data.

Still other embodiments will become readily apparent to those skilled in the art from the following detailed description, wherein are described embodiments by way of illustrating the best mode contemplated. As will be realized, other and different embodiments are possible and the embodiments' several details are capable of modifications in various obvious respects, all without departing from their spirit and the scope. Accordingly, the drawings and detailed description are to be regarded as illustrative in nature and not as restrictive.

BRIEF DESCRIPTION OF THE DRAWINGS

FIGS. **1** and **2** are diagrams showing, by way of examples, an ambulatory, extended-wear electrocardiography and syncope sensor monitor recorder, including an extended wear electrode patch, in accordance with one embodiment, respectively fitted to the sternal region of a female patient and a male patient.

FIG. **3** is a front anatomical view showing, by way of illustration, the locations of the heart and lungs within the rib cage of an adult human.

FIG. **4** is a perspective view showing an extended wear electrode patch in accordance with one embodiment with a monitor recorder inserted.

FIG. **5** is a perspective view showing the monitor recorder of FIG. **4**.

FIG. **6** is a perspective view showing the extended wear electrode patch of FIG. **4** without a monitor recorder inserted.

FIG. **7** is a bottom plan view of the monitor recorder of FIG. **4**.

FIG. **8** is a top view showing the flexible circuit of the extended wear electrode patch of FIG. **4**.

FIG. **9** is a functional block diagram showing the component architecture of the circuitry of the monitor recorder of FIG. **4**.

FIG. **10** is a functional block diagram showing the circuitry of the extended wear electrode patch of FIG. **4**.

FIG. **11** is a functional block diagram showing a system for remote interfacing of a combined ECG and syncope sensor monitor recorder in accordance with one embodiment.

FIG. **12** is a schematic diagram showing the ECG front end circuit of the circuitry of the monitor recorder of FIG. **9**.

FIG. **13** is a flow diagram showing a monitor recorder-implemented method for monitoring ECG and syncope data for use in the monitor recorder of FIG. **4**.

FIG. **14** is a graph showing, by way of example, a typical ECG waveform.

FIG. **15** is a flow diagram showing a method for offloading and converting ECG and other physiological data from an ambulatory extended-wear electrocardiography and syncope sensor monitor in accordance with one embodiment.

FIG. **16** is a method for processing data collected by the combined ECG and syncope monitor in accordance with one embodiment

FIG. **17** is a functional block diagram showing the signal processing functionality of the microcontroller.

FIG. **18** is a functional block diagram showing the operations performed by the download station.

FIG. **19** is a perspective view of an extended wear electrode patch with a flexile wire electrode assembly in accordance with a still further embodiment.

FIG. **20** is perspective view of the flexile wire electrode assembly from FIG. **19**, with a layer of insulating material shielding a bare distal wire around the midsection of the flexible backing.

FIG. **21** is a bottom view of the flexile wire electrode assembly as shown in FIG. **19**.

FIG. **22** is a bottom view of a flexile wire electrode assembly in accordance with a still yet further embodiment.

FIG. **23** is a perspective view showing the longitudinal midsection of the flexible backing of the electrode assembly from FIG. **19**.

FIGS. **24**A-C are functional block diagrams respectively showing practical uses of the ambulatory extended-wear electrocardiography and syncope sensor monitors of FIGS. **1** and **2**.

FIG. **25** is a flow diagram showing a routine for identifying a type of a syncope event for use in the method of FIG. **16** in accordance with one embodiment.

DETAILED DESCRIPTION

ECG, syncope, and other physiological monitoring can be provided through an extended-wear ambulatory monitor that includes two components, a flexible extended wear electrode patch and a removable reusable (or single use) monitor recorder. Both the electrode patch and the monitor recorder are optimized to monitor syncope events and collecting ECG data, capturing electrical signals from the propagation of low-amplitude, relatively low-frequency content cardiac action potentials, particularly the P-waves generated during atrial activation, as described in the commonly-assigned U.S. patent application, entitled "Ambulatory electrocardiography monitoring patch optimized for capturing low amplitude cardiac action potential propagation," Ser. No. 14/488,230, filed Sep. 16, 2014, pending, the disclosure of which is incorporated by reference. Syncope events are events that are indicative of a syncope episode and can be detecting using a sensor in the monitor that recognizes movements associated with a syncope episode, such as a fall or a sudden postural change, as further described below. Further, the monitor is configured to receive patient feedback indicating an onset of a syncope episode, allowing to detect syncope events even in the absence of movements characteristic of syncope, as further described below. FIGS. **1** and **2** are diagrams showing, by way of example, an ambulatory extended-wear electrocardiography and syncope monitor **12** ("wearable monitor **12**"), including a monitor recorder **14**, in accordance with one embodiment, respectively fitted to the sternal region of a female patient **10** and a male patient **11**. The wearable monitor **12** sits centrally positioned axially along the sternal midline **16** on the patient's chest along the sternum **13** and oriented top-to-bottom with the monitor recorder **14** preferably situated towards the patient's head. In a further embodiment, the orientation of the wearable monitor **12** can be corrected post-monitoring, as further described infra, for instance, if the wearable monitor **12** is inadvertently fitted upside down.

The electrode patch **15** is shaped to fit comfortably and conform to the contours of the patient's chest approximately centered on the sternal midline **16** (or immediately to either side of the sternum **13**). The distal end of the electrode patch **15**, under which a lower or inferior pole (ECG electrode) is adhered, extends towards the Xiphoid process and lower sternum and, depending upon the patient's build, may straddle the region over the Xiphoid process and lower sternum. The proximal end of the electrode patch **15**, located under the monitor recorder **14**, under which an upper or superior pole (ECG electrode) is adhered, is below the manubrium and, depending upon patient's build, may straddle the region over the manubrium.

During ECG monitoring, the amplitude and strength of action potentials sensed on the body's surface are affected to varying degrees by cardiac, cellular, extracellular, vector of current flow, and physical factors, such as obesity, dermatitis, large breasts, and high-impedance skin, as can occur in dark-skinned individuals. Sensing along the sternal midline **16** (or immediately to either side of the sternum **13**) significantly improves the ability of the wearable monitor **12** to cutaneously sense cardiac electric signals, particularly P-waves (or atrial activity) and, to a lesser extent, QRS interval signals in ECG waveforms that indicate ventricular activity by countering some of the effects from these factors.

The ability to sense low-amplitude, low-frequency content body surface potentials is directly related to the location of ECG electrodes on the skin's surface and the ability of the sensing circuitry to capture these electrical signals. FIG. **3** is a front anatomical view showing, by way of illustration, the locations of the heart **4** and lungs **5** within an adult human rib cage. Depending on the location of an ECG electrode on the chest, the ECG electrode may be separated from activation regions within the heart **4** by differing combinations of internal tissues and body structures, including heart muscle, intracardiac blood, the pericardium, intrathoracic blood and fluids, the lungs **5**, skeletal muscle, bone structure, subcutaneous fat, and the skin as well as any contaminants present between the skin's surface and electrode signal detection. The degree of amplitude degradation for cardiac transmembrane potentials increases with the number of tissue boundaries encountered between the heart **4** and the skin's surface. The cardiac electrical field is degraded each time the transmembrane potentials encounter a physical boundary separating adjoining tissues due to differences in the respective tissues' electrical resistances. In addition, other non-spatial factors, such as pericardial effusion, emphysema, or fluid accumulation in the lungs, as further explained infra, can further degrade body surface potentials.

Internal tissues and body structures can adversely affect the current strength and signal fidelity of all body surface potentials; however, low-amplitude cardiac action potentials, particularly P-waves with a normative amplitude of less than 0.25 microvolts (mV) and a normative duration of less than 120 milliseconds (ms), are most apt to be negatively impacted. The atria **6** are generally located posteriorly within the thoracic cavity (except for the anterior right atrium and right atrial appendage), and, physically, the left atrium is the portion of the heart **4** furthest away from the surface of the skin on the chest. Conversely, ventricles **7**, which generate larger amplitude signals, are generally located anteriorly with the anterior right ventricle and most of the left ventricle situated relatively close to the skin surface on the chest, which contributes to the relatively stronger ventricular waveform amplitudes. Thus, the quality of P-waves (and other amplitude action potential signals that are already low) is more susceptible to weakening from intervening tissues and structures than the waveforms associated with ventricular activation.

The importance of positioning ECG electrodes along the sternal midline **15** has largely been overlooked by conventional approaches to ECG monitoring, in part due to the inability of their sensing circuitry to reliably detect low-amplitude, low-frequency content electrical signals, particularly P-waves. In turn, the inability to keenly sense P-waves has motivated ECG electrode placement in other non-sternal midline thoracic locations, where the QRSTU components that represent ventricular electrical activity are more readily detectable by their sensing circuitry than P-waves. In addition, ECG electrode placement along the sternal midline **15** presents major patient wearability challenges, such as fitting a monitoring ensemble within the narrow confines of the inter-mammary cleft between the breasts, that, to a large extent, drive physical packaging concerns, which can be incompatible with ECG monitors intended for placement, for example, in the upper pectoral region or other non-sternal midline thoracic location. In contrast, the wearable monitor **12** uses an electrode patch **15** specifically intended for extended wear placement in a location at the sternal midline **16** (or immediately to either side of the sternum **13**). Combined with a monitor recorder **14** that uses sensing circuitry optimized to preserve the characteristics of low-amplitude cardiac action potentials, especially signals from the atria, as further described infra with reference to FIG. **12**, the electrode patch **15** helps to significantly improve atrial activation (P-wave) sensing through placement in a body location that robustly minimizes the effects of tissue and body structure.

Referring back to FIGS. **1** and **2**, placement of the wearable monitor **12** in the sternal midline **13** region positions the electrode patch **15** ECG electrodes in locations better adapted to sensing and recording low-amplitude cardiac action potentials during atrial propagation (P-wave signals) than placement in other locations, such as the upper left pectoral region, which is common in most conventional ambulatory ECG monitors. The sternum **13** overlies the right atrium of the heart **4**. As a result, action potential signals must travel through fewer layers of tissue and structure to reach the ECG electrodes of the electrode patch **15** on the body's surface along the sternal midline **13** compared with other monitoring locations, a distinction that is critically important to capturing low-frequency content electrical signals, such as P-waves.

Moreover, cardiac action potential propagation travels simultaneously along a north-to-south and right-to-left vector, beginning high in the right atrium and ultimately ending in the posterior and lateral region of the left ventricle. Cardiac depolarization originates high in the right atrium in the SA node before concurrently spreading leftward towards the left atrium and inferiorly towards the AV node. The ECG electrodes of the electrode patch **15** are placed with the upper or superior pole (ECG electrode) along the sternal midline **13** in the region of the manubrium and the lower or inferior pole (ECG electrode) along the sternal midline **13** in the region of the Xiphoid process **9** and lower sternum. The ECG electrodes are placed primarily in a north-to-south orientation along the sternum **13** that corresponds to the north-to-south waveform vector exhibited during atrial activation. This orientation corresponds to the aVF lead used in a conventional 12-lead ECG that is used to sense positive or upright P-waves.

Furthermore, the thoracic region underlying the sternum **13** along the midline **16** between the manubrium **8** and Xiphoid process **9** is relatively free of lung tissue, musculature, and other internal body structures that could occlude the electrical signal path between the heart **4**, particularly the atria, and ECG electrodes placed on the surface of the skin. Fewer obstructions means that cardiac electrical potentials encounter fewer boundaries between different tissues. As a result, compared with other thoracic ECG sensing locations, the cardiac electrical field is less altered when sensed dermally along the sternal midline **13**. Further, the proximity of the sternal midline **16** to the ventricles **7** facilitates sensing of right ventricular activity and provides superior recordation of the QRS interval, again, in part due to the relatively clear electrical path between the heart **4** and the skin surface.

Finally, non-spatial factors can affect transmembrane action potential shape and conductivity. For instance, myocardial ischemia, an acute cardiac condition, can cause a transient increase in blood perfusion in the lungs **5**. The perfused blood can significantly increase electrical resistance across the lungs **5** and, therefore, degrade transmission of the cardiac electrical field to the skin's surface. However, placement of the wearable monitor **12** along the sternal midline **16** in the inter-mammary cleft between the breasts is relatively resilient to the adverse cardiac action potential degradation effects caused by ischemic conditions because the body surface potentials from a location that is relatively clear of underlying lung tissue and fat help compensate for the loss of signal amplitude and content. Thus, the monitor recorder **14** can record the P-wave morphology that may be compromised by myocardial ischemia and, therefore, enhance the difficulty with diagnosing the specific arrhythmias that can be associated with myocardial ischemia.

During use, the electrode patch **15** is first adhered to the skin along the sternal midline **16** (or immediately to either side of the sternum **13**). A monitor recorder **14** is then snapped into place on the electrode patch **15** using an electromechanical docking interface to initiate ECG monitoring. FIG. **4** is a perspective view showing an extended wear electrode patch **15** in accordance with one embodiment where a monitor recorder **14** is inserted. The body of the electrode patch **15** is preferably constructed using a flexible backing **20** formed as an elongated strip **21** of wrap knit or similar stretchable material about 145 mm long and 32 mm at the widest point with a narrow longitudinal mid-section **23** evenly tapering inward from both sides. A pair of cut-outs **22** between the distal and proximal ends of the electrode patch **15** create a narrow longitudinal midsection **23** or "isthmus" and defines an elongated "hourglass"-like shape when viewed from above, such as described in commonly-assigned U.S. Design patent application, entitled "Extended Wear Electrode Patch," Ser. No. 29/472,045, filed Nov. 7, 2013, pending, the disclosure of which is incorporated by reference. The upper part of the "hourglass" is sized to allow an electrically non-conductive receptacle **25**, which sits on top of the outward-facing surface of the electrode patch **15**, to be affixed to the electrode patch **15** with an ECG electrode placed underneath on the patient-facing underside, or contact, surface of the electrode patch **15**; the upper part of the "hourglass" has a longer and wider profile (but remains rounded and tapered to fit comfortably between the breasts) than the lower part of the "hourglass," which is sized primarily to allow just the placement of an ECG electrode of appropriate shape and surface area to record the P-wave and the QRS signals sufficiently given the inter-electrode spacing.

The electrode patch **15** incorporates features that significantly improve wearability, performance, and patient comfort throughout an extended monitoring period. The entire electrode patch **15** is lightweight in construction, which allows the patch to be resilient to disadhesing or falling off and, critically, to avoid creating distracting discomfort to the patient, even when the patient is asleep. In contrast, the weight of a heavy ECG monitor impedes patient mobility and will cause the monitor to constantly tug downwards and press on the patient's body, which can inflame the skin and lead to frequent adjustments by the patient to maintain comfort.

During every day wear, the electrode patch **15** is subjected to pushing, pulling, and torsional movements, including compressional and torsional forces when the patient bends forward as well as tensile and torsional forces when the patient leans backwards. To counter these stress forces, the electrode patch **15** incorporates crimp and strain reliefs, such as described in commonly-assigned U.S. patent application, entitled "Extended Wear Electrocardiography Patch," Ser. No. 14/080,717, filed Nov. 14, 2013, pending, the disclosure of which is incorporated by reference. In addition, the cut-outs **22** and longitudinal midsection **23** help minimize interference with and discomfort to breast tissue, particularly in women (and gynecomastic men). The cut-outs **22** and longitudinal midsection **23** further allow better conformity of the electrode patch **15** to sternal bowing and to the narrow isthmus of flat skin that can occur along the bottom of the inter-mammary cleft between the breasts, especially in buxom women. The cut-outs **22** and narrow and flexible longitudinal midsection **23** help the electrode patch **15** fit nicely between a pair of female breasts in the inter-mammary cleft. In one embodiment, the cut-outs **22** can be graduated to form the longitudinal midsection **23** as a narrow in-between stem or isthmus portion about 7 mm wide. In an additional embodiment, tabs **24** can respectively extend an additional 8 mm to 12 mm beyond the distal and proximal ends of the flexible backing **20** to facilitate adhering the electrode patch **15** to or removing the electrode patch **15** from the sternum **13**. These tabs preferably lack adhesive on the underside, or contact, surface of the electrode patch **15**. Still other shapes, cut-outs, and conformities to the electrode patch **15** are possible.

The monitor recorder **14** removably and re-usably snaps into an electrically non-conductive receptacle **25** during use. The monitor recorder **14** contains electronic circuitry for recording and storing the patient's electrocardiography as sensed via a pair of ECG electrodes provided on the electrode patch **15**, as further described infra beginning with reference to FIG. **9**. The non-conductive receptacle **25** is provided on the top surface of the flexible backing **20** with a retention catch **26** and tension clip **27** molded into the non-conductive receptacle **25** to conformably receive and securely hold the monitor recorder **14** in place.

The monitor recorder **14** includes a sealed housing that snaps into place in the non-conductive receptacle **25**. FIG. **5** is a perspective view showing the monitor recorder **14** of FIG. **4**. The sealed housing **50** of the monitor recorder **14** intentionally has a rounded isosceles trapezoidal-like shape **52** when viewed from above, such as described in commonly-assigned U.S. Design patent application, entitled "Electrocardiography Monitor," Ser. No. 29/472,046, filed Nov. 7, 2013, pending, the disclosure of which is incorporated by reference. The edges **51** along the top and bottom surfaces are rounded for patient comfort. The sealed housing **50** is approximately 47 mm long, 23 mm wide at the widest point, and 7 mm high, excluding a patient-operable tactile-feedback button **55**. The sealed housing **50** can be molded out of polycarbonate, ABS, or an alloy of those two materials. The button **55** is waterproof and the button's top outer surface is molded silicon rubber or similar soft pliable material. A retention detent **53** and tension detent **54** are molded along the edges of the top surface of the housing **50** to, respectively, engage the retention catch **26** and the tension clip **27** molded into non-conductive receptacle **25**. Other shapes, features, and conformities of the sealed housing **50** are possible.

The electrode patch **15** is intended to be disposable, while the monitor recorder **14** is designed for reuse and can be transferred to successive electrode patches **15** to ensure continuity of monitoring, if so desired. The monitor recorder **14** can be used only once, but single use effectively wastes the synergistic benefits provided by the combination of the disposable electrode patch and reusable monitor recorder, as further explained infra with reference to FIGS. **23**A-C. The placement of the wearable monitor **12** in a location at the sternal midline **16** (or immediately to either side of the sternum **13**) benefits long-term extended wear by removing the requirement that ECG electrodes be continually placed in the same spots on the skin throughout the monitoring period. Instead, the patient is free to place an electrode patch **15** anywhere within the general region of the sternum **13**.

As a result, at any point during ECG monitoring, the patient's skin can recover from wearing electrode patch **15**, which increases patient comfort and satisfaction, while the monitor recorder **14** ensures ECG monitoring continuity with minimal effort. A monitor recorder **14** is merely unsnapped from a worn out electrode patch **15**, the worn out electrode patch **15** is removed from the skin, a new electrode patch **15** is adhered to the skin, possibly in a new spot immediately adjacent to the earlier location, and the same monitor recorder **14** is snapped into the new electrode patch **15** to re-initiate and continue the ECG monitoring.

During use, the electrode patch **15** is first adhered to the skin in the sternal region. FIG. **6** is a perspective view showing the extended wear electrode patch **15** of FIG. **4** without a monitor recorder **14** inserted. A flexible circuit **32** is adhered to each end of the flexible backing **20**. A distal circuit trace **33** from the distal end **30** of the flexible backing **20** and a proximal circuit trace (not shown) from the proximal end **31** of the flexible backing **20** electrically couple ECG electrodes (not shown) with a pair of electrical pads **34**. In a further embodiment, the distal and proximal circuit traces are replaced with interlaced or sewn-in flexible wires, as further described infra beginning with reference to FIG. **19**. The electrical pads **34** are provided within a moisture-resistant seal **35** formed on the bottom surface of the non-conductive receptacle **25**. When the monitor recorder **14** is securely received into the non-conductive receptacle **25**, that is, snapped into place, the electrical pads **34** interface to electrical contacts (not shown) protruding from the bottom surface of the monitor recorder **14**. The moisture-resistant seal **35** enables the monitor recorder **14** to be worn at all times, even during showering or other activities that could expose the monitor recorder **14** to moisture or adverse conditions.

In addition, a battery compartment **36** is formed on the bottom surface of the non-conductive receptacle **25**. A pair of battery leads (not shown) from the battery compartment **36** to another pair of the electrical pads **34** electrically interface the battery to the monitor recorder **14**. The battery contained within the battery compartment **35** is a direct current (DC) power cell and can be replaceable, rechargeable or disposable.

The monitor recorder **14** draws power externally from the battery provided in the non-conductive receptacle **25**, thereby uniquely obviating the need for the monitor recorder **14** to carry a dedicated power source. FIG. **7** is a bottom plan view of the monitor recorder **14** of FIG. **4**. A cavity **58** is formed on the bottom surface of the sealed housing **50** to accommodate the upward projection of the battery compartment **36** from the bottom surface of the non-conductive receptacle **25**, when the monitor recorder **14** is secured in place on the non-conductive receptacle **25**. A set of electrical contacts **56** protrude from the bottom surface of the sealed housing **50** and are arranged in alignment with the electrical pads **34** provided on the bottom surface of the non-conductive receptacle **25** to establish electrical connections between the electrode patch **15** and the monitor recorder **14**. In addition, a seal coupling **57** circumferentially surrounds the set of electrical contacts **56** and securely mates with the moisture-resistant seal **35** formed on the bottom surface of the non-conductive receptacle **25**. The battery contained within the battery compartment **36** can be replaceable, rechargeable or disposable. In a further embodiment, the ECG sensing circuitry of the monitor recorder **14** can be supplemented with additional sensors, including an SpO_2 sensor, a blood pressure sensor, a temperature sensor, respiratory rate sensor, a glucose sensor, an air flow sensor, and a volumetric pressure sensor, which can be incorporated directly into the monitor recorder **14** or onto the non-conductive receptacle **25**.

The placement of the flexible backing **20** on the sternal midline **16** (or immediately to either side of the sternum **13**) also helps to minimize the side-to-side movement of the wearable monitor **12** in the left- and right-handed directions during wear. However, the wearable monitor **12** is still susceptible to pushing, pulling, and torqueing movements, including compressional and torsional forces when the patient bends forward, and tensile and torsional forces when the patient leans backwards or twists. To counter the dislodgment of the flexible backing **20** due to compressional and torsional forces, a layer of non-irritating adhesive, such as hydrocolloid, is provided at least partially on the underside, or contact, surface of the flexible backing **20**, but only on the distal end **30** and the proximal end **31**. As a result, the underside, or contact surface of the longitudinal midsection **23** does not have an adhesive layer and remains free to move relative to the skin. Thus, the longitudinal midsection **23** forms a crimp relief that, respectively, facilitates compression and twisting of the flexible backing **20** in response to compressional and torsional forces. Other forms of flexible backing crimp reliefs are possible.

Unlike the flexible backing **20**, the flexible circuit **32** can only bend and cannot stretch in a planar direction. The flexible circuit **32** can be provided either above or below the flexible backing **20**. FIG. **8** is a top view showing the flexible circuit **32** of the extended wear electrode patch **15** of FIG. **4** when mounted above the flexible backing **20**. A distal ECG electrode **38** and proximal ECG electrode **39** are respectively coupled to the distal and proximal ends of the flexible circuit **32** to serve as electrode signal pickups. The flexible circuit **32** preferably does not extend to the outside edges of the flexible backing **20**, thereby avoiding gouging or discomforting the patient's skin during extended wear, such as when sleeping on the side. During wear, the ECG electrodes **38**, **39** must remain in continual contact with the skin. A strain relief **40** is defined in the flexible circuit **32** at a location that is partially underneath the battery compartment **36** when the flexible circuit **32** is affixed to the flexible backing **20**. The strain relief **40** is laterally extendable to counter dislodgment of the ECG electrodes **38**, **39** due to bending, tensile, and torsional forces. A pair of strain relief cutouts **41** partially extend transversely from each opposite side of the flexible circuit **32** and continue longitudinally towards each other to define in 'S'-shaped pattern, when viewed from above. The strain relief, respectively, facilitates longitudinal extension and twisting of the flexible circuit **32** in response to tensile and torsional forces. Other forms of circuit board strain relief are possible.

ECG monitoring and other functions performed by the monitor recorder **14** are provided through a micro controlled architecture. FIG. **9** is a functional block diagram showing the component architecture of the circuitry **60** of the monitor recorder **14** of FIG. **4**. The circuitry **60** is externally powered through a battery provided in the non-conductive receptacle **25**, as further described with reference to FIG. **6**. Both power and raw ECG signals, which originate in the pair of ECG electrodes **38**, **39**, as further described with reference to FIG. **8**, on the distal and proximal ends of the electrode patch **15**, are received through an external connector **65** that mates with a corresponding physical connector on the electrode patch **15**. The external connector **65** includes the set of electrical contacts **56** that protrude from the bottom surface of the sealed housing **50** and that physically as well as electrically interface with the set of pads **34** provided on the bottom surface of the non-conductive receptacle **25**. The external connector includes electrical contacts **56** for data download, microcontroller communications, power, analog inputs, and a peripheral expansion port. The arrangement of the pins on the electrical connector **65** of the monitor recorder **14** and the device into which the monitor recorder **14** is attached, whether an electrode patch **15** or a download station (not shown), follow the same electrical pin assignment convention to facilitate interoperability. The external connector **65** also serves as a physical interface to a download station that permits the retrieval of stored ECG monitoring data, communication with the monitor recorder **14**, and performance of other functions. The download station is further described infra with reference to FIG. **18**.

Operation of the circuitry **60** of the monitor recorder **14** is managed by a microcontroller **61**, such as the EFM32 Tiny Gecko 32-bit microcontroller, manufactured by Silicon Laboratories Inc., Austin, Tex. The microcontroller **61** has flexible energy management modes and includes a direct memory access controller and built-in analog-to-digital and digital-to-analog converters (ADC and DAC, respectively). The microcontroller **61** also includes a program memory unit containing internal flash memory that is readable and writeable. The internal flash memory can also be programmed externally. The microcontroller **61** operates under modular micro program control as specified in firmware stored in the internal flash memory. The functionality and firmware modules relating to signal processing by the microcontroller **61** are further described infra with reference to FIG. **17**. The microcontroller **61** draws power externally from the battery provided on the electrode patch **15** via a pair of the electrical contacts **56**. The microcontroller **61** connects to the ECG front end circuit **63** that measures raw cutaneous electrical signals using a driven reference that eliminates common mode noise, as further described infra with reference to FIG. **12**.

The circuitry **60** of the monitor recorder **14** also includes a flash memory **62**, which the microcontroller **61** uses for storing ECG monitoring data as well as other physiology and information. The flash memory **62** also draws power externally from the battery provided on the electrode patch **15** via a pair of the electrical contacts **56**. Data is stored in a serial flash memory circuit, which supports read, erase, and program operations over a communications bus. The flash memory **62** enables the microcontroller **61** to store digitized ECG data. The communications bus further enables the flash memory **62** to be directly accessed externally over the external connector **65** when the monitor recorder **14** is interfaced to a download station.

The microcontroller **61** includes functionality that enables the acquisition of samples of analog ECG signals, which are converted into a digital representation, as further described infra with reference to FIG. **17**. In one mode, the microcontroller **61** will acquire, sample, digitize, signal process, and store digitized ECG data into available storage locations in the flash memory **62** until all memory storage locations are filled, after which the digitized ECG data needs to be downloaded or erased to restore memory capacity. Data download or erasure can also occur before all storage locations are filled, which would free up memory space sooner, albeit at the cost of possibly interrupting monitoring while downloading or erasure is performed. In another mode, the microcontroller **61** can include a loop recorder feature that will overwrite the oldest stored Syncodata once all storage locations are filled, albeit at the cost of potentially losing the stored data that was overwritten, if not previously downloaded. Still other modes of data storage and capacity recovery are possible.

Syncope episodes are associated with certain movements. For example, a patient experiencing a syncope episode, if standing and unassisted, is likely to fall down. Similarly, a patient who is sitting down, is likely to experience a sudden postural change when experiencing a syncope episode, such as falling back, forward, or to a side. The recognition of such movements through changes of acceleration and deceleration in the body can be used to detect syncope events. The circuitry **60** of the monitor recorder **14** further contains a syncope sensor implemented as at least one of an actigraphy-based syncope sensor **64**, which is a 3-axis accelerometer in one embodiment, and a tactile syncope feedback button **66**, as discussed infra. The accelerometer may be configured to generate interrupt signals to the microcontroller **61** upon detecting independent movement events, such as free-fall or waking up, and device position. In addition, the actigraphy provided by the accelerometer can be used during post-monitoring analysis to correct the orientation of the monitor recorder **14** if, for instance, the monitor recorder **14** has been inadvertently installed upside down, that is, with the monitor recorder **14** oriented on the electrode patch **15** towards the patient's feet, as well as for other event analyses.

In one embodiment, the accelerometer of actigraphy-based syncope sensor **64** may be configured with actigraphy-filtering criteria, and based on these criteria, the sensor only records actigraphy data that indicate a syncope event, such as a fall or sudden postural change. For example, when a patient is standing, an accelerometer records a g-force (g) equivalent to 1 g along the axis perpendicular towards the earth. If the patient falls, the accelerometer records a g-force equivalent to zero or very close to zero along the axis perpendicular towards the earth during the freefall, and the actigraphy-filtering criteria may identify such data as an impulse that exceeds a certain impulse threshold. A syncope event may also be consistent with a sudden acceleration or deceleration that indicates a sudden postural change, where the g-force along at least one axis is greater than a specific limit, which the actigraphy-filtering criteria may also identify as an impulse that exceeds a certain impulse threshold. In a further embodiment, the actigraphy-based syncope sensor **64** may be configured with actigraphy filtering criteria that permit the sensor to record a broader range of actigraphy data, such as data that indicate multiple notable physical events. Such events may include, for example, falling, a sudden postural change, sleeping, waking, and hyperactivity, which may be distinguished from actigraphy data that reflect the rise and fall of a patient's chest during regular breathing, which is ordinary and expected. Other embodiments are possible, wherein different types of actigraphy data are collected.

Further, the circuitry **60** of the monitor recorder **14** includes patient-interfaceable components, including the tactile syncope feedback button **66**, which a patient can press to indicate a syncope episode or to perform other functions. For example, the patient **10**, **11** can press the tactile syncope feedback button **66** at onset or shortly after a syncope episode, allowing for detection of a syncope event even if the patient's posture does not change, such as if the patient is lying down. Other patient-interfaceable components can include a buzzer **67**, such as a speaker, magnetic resonator, or piezoelectric buzzer. The buzzer **67** can be used by the microcontroller **61** to output feedback to a patient, such as to confirm power up and initiation of ECG monitoring. Still other components as part of the circuitry **60** of the monitor recorder **14** are possible.

The microcontroller **61** includes an expansion port **68** that also utilizes the communications bus. External devices, separately drawing power externally from the battery provided on the electrode patch **15** or other source, can interface to the microcontroller **61** over the expansion port **68** in half duplex mode. For instance, an external physiology sensor can be provided as part of the circuitry **60** of the monitor recorder **14** or can be provided on the electrode patch **15** with communication with the microcontroller **61** provided over one of the electrical contacts **56**. The physiology sensor can include an SpO_2 sensor, blood pressure sensor, temperature sensor, respiratory rate sensor, glucose sensor, airflow sensor, volumetric pressure sensing, or other types of sensor or telemetric input sources. In a further embodiment, a wireless interface for interfacing with other wearable (or implantable) physiology monitors, data offload, and programming can be provided as part of the circuitry **60** of the monitor recorder **14** or can be provided on the electrode patch **15** with communication with the microcontroller **61** provided over one of the electrical contacts **56**.

While the monitor recorder **14** operates under micro control, most of the electrical components of the electrode patch **15** operate passively. FIG. **10** is a functional block diagram showing the circuitry **70** of the extended wear electrode patch **15** of FIG. **4**. The circuitry **70** of the electrode patch **15** is electrically coupled with the circuitry **60** of the monitor recorder **14** through an external connector **74**. The external connector **74** is terminated through the set of pads **34** provided on the bottom of the non-conductive receptacle **25**, which electrically mate to corresponding electrical contacts **56** protruding from the bottom surface of the sealed housing **50** to electrically interface the monitor recorder **14** to the electrode patch **15**.

The circuitry **70** of the electrode patch **15** performs three primary functions. First, a battery **71** is provided in a battery compartment formed on the bottom surface of the non-conductive receptacle **25**. The battery **71** is electrically interfaced to the circuitry **60** of the monitor recorder **14** as a source of external power. The unique provisioning of the battery **71** on the electrode patch **15** provides several advantages. First, placing the battery **71** physically on the electrode patch **15** lowers the center of gravity of the overall wearable monitor **12** and, thereby, helps to minimize shear forces as well as the effects of movements of the patient and clothing. Moreover, the housing **50** of the monitor recorder **14** is sealed against moisture, and providing power externally avoids having to either periodically open the housing **50** for the battery replacement, which also creates the potential for moisture intrusion and human error, or to recharge the battery, which can potentially take the monitor recorder **14** off line for hours at a time. In addition, the electrode patch **15** is intended to be disposable, while the monitor recorder **14** is a reusable component. Each time that the electrode patch **15** is replaced, a fresh battery is provided for the use of the monitor recorder **14**, which enhances ECG monitoring performance quality and duration of use. Further, the architecture of the monitor recorder **14** is open such that other physiology sensors or components can be added using the expansion port **68** of the microcontroller **61**. Requiring those additional sensors or components to draw power from a source external to the monitor recorder **14** renders power considerations independent of the monitor recorder **14**. This approach also enables a battery of higher capacity to be introduced when needed to support the additional sensors or components without effecting the monitor recorders circuitry **60**.

Second, the pair of ECG electrodes **38**, **39**, respectively, provided on the distal and proximal ends of the flexible circuit **32** are electrically coupled to the set of pads **34** provided on the bottom of the non-conductive receptacle **25** by way of their respective circuit traces **33**, **37**. The signal ECG electrode **39** includes a protection circuit **72**, which is an inline resistor that protects the patient from excessive leakage current should the front end circuit fail.

Last, in a further embodiment, the circuitry **70** of the electrode patch **15** includes a cryptographic circuit **73** to authenticate an electrode patch **15** for use with a monitor recorder **14**. The cryptographic circuit **73** includes a device capable of secure authentication and validation. The cryptographic device **73** ensures that only genuine, non-expired, safe, and authenticated electrode patches **15** are permitted to provide monitoring data to a monitor recorder **14** and for a specific patient.

When operated standalone, the monitor recorder **14** of the wearable monitor **12** senses and records the patient's ECG data into an onboard memory. FIG. **11** is a functional block diagram showing a system **120** for remote interfacing of a combined ECG and syncope sensor monitor recorder in accordance with one embodiment. The monitor recorder **14** is a reusable component that can be fitted during patient monitoring into a non-conductive receptacle provided on the electrode patch **15**, as further described infra with reference to FIG. **4**, and later removed for offloading stored ECG data or to receive revised programming. The monitor recorder **14** can then be connected to a download station **125**, which could be a programmer or other device that permits the retrieval of stored ECG monitoring data, execution of diagnostics on or programming of the monitor recorder **14**, or other functions. The monitor recorder **14** includes a set of electrical contacts (not shown) that enable the monitor recorder **14** to physically interface with a set of terminals **128** on a paired receptacle **127** of the download station **125**. In turn, the download station **125** executes a communications or offload program **126** ("Offload") or similar program that interacts with the monitor recorder **14** via the physical interface to retrieve the stored ECG monitoring data or to execute diagnostics on or reprogram the monitor recorder's program memory unit and, thereby, revise the subsequent operation of the monitor recorder **14**. The download station **125** could be a server, personal computer, tablet or handheld computer, smart mobile device, or purpose-built programmer designed specifically to interface with a monitor recorder **14**. Still other forms of download station **125** are possible. In addition, the wearable monitor **12** can interoperate with other devices, as further described in detail in commonly-assigned U.S. patent application, entitled "Remote Interfacing of Extended Wear Electrocardiography and Physiological Sensor Monitor," Ser. No. 14/082,071, filed Nov. 15, 2013, pending, the disclosure of which is incorporated by reference.

Upon retrieving stored ECG monitoring data from a monitor recorder **14**, middleware first operates on the retrieved data to adjust the ECG capture quality, as necessary, and to convert the retrieved data into a format suitable for use by third party post-monitoring analysis software, as further described infra with reference to FIG. **15**. The formatted data can then be retrieved from the download station **125** over a hard link **135** using a control program **137** ("Ctl") or analogous application executing on a personal computer **136** or other connectable computing device, via a communications link (not shown), whether wired or wireless, or by physical transfer of storage media (not shown). The personal computer **136** or other connectable device may also execute middleware that converts ECG data and other information into a format suitable for use by a third-party post-monitoring analysis program, as further described infra with reference to FIG. **15**. Note that formatted data stored on the personal computer **136** would have to be maintained and safeguarded in the same manner as electronic medical records (EMRs) **134** in the secure database **124**, as further discussed infra. In a further embodiment, the download station **125** can directly interface with other devices over a computer communications network **121**, which could be a combination of a local area network and a wide area network, including the Internet, over a wired or wireless connection.

A client-server model could be used to employ a server **122** to remotely interface with the download station **125** over the network **121** and retrieve the formatted data or other information. The server **122** executes a patient management program **123** ("Mgt") or similar application that stores the retrieved formatted data and other information in a secure database **124** cataloged in that patient's EMRs **134**. In addition, the patient management program **123** could manage a subscription service that authorizes a monitor recorder **14** to operate for a set period of time or under pre-defined operational parameters, such as described in commonly-assigned U.S. patent application, entitled "Self-Authenticating Electrocardiography Monitoring Circuit," Ser. No. 14/082,066, filed Nov. 15, 2013, pending, the disclosure of which is incorporated by reference.

The patient management program **123**, or other trusted application, also maintains and safeguards the secure database **124** to limit access to patient EMRs **134** to only authorized parties for appropriate medical or other uses, such as mandated by state or federal law, such as under the Health Insurance Portability and Accountability Act (HIPAA) or per the European Union's Data Protection Directive. For example, a physician may seek to review and evaluate his patient's ECG monitoring data, as securely stored in the secure database **124**. The physician would execute an application program **130** ("Pgm"), such as a post-monitoring ECG analysis program, on a personal computer **129** or other connectable computing device, and, through the application **130**, coordinate access to his patient's EMRs **134** with the patient management program **123**. Other schemes and safeguards to protect and maintain the integrity of patient EMRs **134** are possible.

The ECG front end circuit **63** measures raw cutaneous electrical signals using a driven reference that effectively reduces common mode noise, power supply noise and system noise, which is critical to preserving the characteristics of low-amplitude cardiac action potentials, especially those signals from the atria. FIG. **12** is a schematic diagram **80** showing the ECG front end circuit **63** of the circuitry **60** of the monitor recorder **14** of FIG. **9**. The ECG front end circuit **63** senses body surface potentials through a signal lead ("S1") and reference lead ("REF"), which are, respectively, connected to the ECG electrodes of the electrode patch **15**. Power is provided to the ECG front end circuit **63** through a pair of DC power leads ("VCC" and "GND"). An analog ECG signal ("ECG") representative of the electrical activity of the patient's heart over time is output, which the micro controller **11** converts to digital representation and filters, as further described infra.

The ECG front end circuit **63** is organized into five stages, a passive input filter stage **81**, a unity gain voltage follower stage **82**, a passive high-pass filtering stage **83**, a voltage amplification and active filtering stage **84**, and an anti-aliasing passive filter stage **85**, and includes a reference generator. Each of these stages and the reference generator will now be described.

The passive input filter stage **81** includes the parasitic impedance of the ECG electrodes **38**, **39**, as further described with reference to FIG. **8**, the protection resistor that is included as part of the protection circuit **72** of the ECG electrode **39**, as further described with reference to FIG. **10**, an AC coupling capacitor **87**, a termination resistor **88**, and filter capacitor **89**. This stage passively shifts the frequency response poles downward there is a high electrode impedance from the patient on the signal lead S1 and reference lead REF, which reduces high-frequency noise.

The unity gain voltage follower stage **82** provides a unity voltage gain that allows current amplification by an Operational Amplifier ("Op Amp") **90**. In this stage, the voltage stays the same as the input, but more current is available to feed additional stages. This configuration allows a very high input impedance to avoid disrupting the body surface potentials or the filtering effect of the previous stage.

The passive high-pass filtering stage **83** is a high-pass filter that removes baseline wander and any offset generated from the previous stage. Adding an AC coupling capacitor **91** after the Op Amp **90** allows the use of lower cost components, while increasing signal fidelity.

The voltage amplification and active filtering stage **84** amplifies the voltage of the input signal through Op Amp **91**, while applying a low-pass filter. The DC bias of the input signal is automatically centered in the highest performance input region of the Op Amp **91** because of the AC coupling capacitor **91**.

The anti-aliasing passive filter stage **85** provides an anti-aliasing low-pass filter. When the microcontroller **61** acquires a sample of the analog input signal, a disruption in the signal occurs as a sample and hold capacitor that is internal to the microcontroller **61** is charged to supply a signal for acquisition.

The reference generator in subcircuit **86** drives a driven reference containing power supply noise and system noise to the reference lead REF. A coupling capacitor **87** is included on the signal lead S1, and a pair of resistors **93***a*, **93***b* inject system noise into the reference lead REF. The reference generator is connected directly to the patient, thereby avoiding the thermal noise of the protection resistor that is included as part of the protection circuit **72**.

In contrast, conventional ECG lead configurations attempt to balance signal and reference lead connections. The conventional approach suffers from the introduction of differential thermal noise, lower input common mode rejection, increased power supply noise, increased system noise, and differential voltages between the patient reference and the reference used on the device that can obscure, at times, extremely low-amplitude body surface potentials.

Here, the parasitic impedance of the ECG electrodes **38**, **39**; the protection resistor that is included as part of the protection circuit **72**; and the coupling capacitor **87** allow the reference lead REF to be connected directly to the skin's surface without any further components. As a result, the differential thermal noise problem caused by pairing protection resistors to signal and reference leads, as used in conventional approaches, is avoided.

The microcontroller **61** operates under modular micro-program control as specified in firmware, and the program control includes processing of the analog ECG signal output by the ECG front end circuit **63**. FIG. **17** is a functional block diagram showing the signal processing functionality **280** of the microcontroller **61**. The microcontroller **61** operates under modular microprogram control as specified in firmware **282**. The firmware modules **282** include high- and low-pass filtering **283** as well as compression **284**. Other modules are possible. The microcontroller **61** has a built-in ADC; however, ADC functionality could also be provided in the firmware **282**.

The ECG front end circuit **63** first outputs an analog ECG signal, which the ADC **281** acquires, samples and converts into an uncompressed digital representation. The microcontroller **61** includes one or more firmware modules **283** that perform filtering. In one embodiment, three low-pass filters and two high-pass filters are used. Following filtering, the digital representation of the cardiac activation wave front amplitudes are compressed by a compression module **284** before being written out to storage **285**.

The download station executes a communications or offload program ("Offload") or similar program that interacts with the monitor recorder **14** via the external connector **65** to retrieve the stored ECG monitoring data. FIG. **18** is a functional block diagram showing the operations **260** performed by the download station. The download station could be a server, personal computer, tablet or handheld computer, smart mobile device, or purpose-built programmer designed specifically for interfacing with a monitor recorder **14**. Still other forms of download station are possible, including download stations connected through wireless interfacing using, for instance, a smart phone connected to the monitor recorder **14** through Bluetooth or Wi-Fi.

The download station is responsible for offloading stored ECG monitoring data from a monitor recorder **14** and includes an electromechanical docking interface by which the monitor recorder **14** is connected at the external connector **65**. The download station operates under programmable control as specified in software **261**. The stored ECG monitoring data retrieved from storage **262** on a monitor recorder **14** are first decompressed by a decompression module **263**, which converts the stored ECG monitoring data back into an uncompressed digital representation more suited to signal processing than a compressed signal. The retrieved ECG monitoring data may be stored into local storage for archival purposes, either in original compressed form or uncompressed.

The download station can include an array of filtering modules. For instance, a set of phase distortion filtering tools **264** may be provided, where corresponding software filters can be provided for each filter implemented in the firmware executed by the microcontroller **61**. The digital signals are run through the software filters in a reverse direction to remove phase distortion. For instance, a 45 Hertz high-pass filter in firmware may have a matching reverse 45 Hertz high-pass filter in software. Most of the phase distortion is corrected, that is, canceled to eliminate noise at the set frequency, but data at other frequencies in the waveform remain unaltered. As well, bidirectional impulse infinite response (IIR) high-pass filters and reverse direction (symmetric) IIR low-pass filters can be provided. Data is run through these filters first in a forward direction, then in a reverse direction, which generates a square of the response and cancels out phase distortion. This type of signal processing is particularly helpful with improving the display of the ST-segment by removing low-frequency noise.

An automatic gain control (AGC) module **265** can also be provided to adjust the digital signals to a usable level based on peak or average signal level or other metric. AGC is particularly critical to single-lead ECG monitors, where physical factors, such as the tilt of the heart, can affect the electrical field generated. On three-lead Holter monitors, the leads are oriented in vertical, horizontal and diagonal directions. As a result, the horizontal and diagonal leads may be higher amplitude and ECG interpretation will be based on one or both of the higher amplitude leads. In contrast, the wearable monitor **12** has only a single lead that is oriented in the vertical direction; thus, variations in amplitude will be wider than available with multi-lead monitors, which have alternate leads to fall back upon.

In addition, AGC may be necessary to maintain compatibility with existing ECG interpretation software, which is typically calibrated for multi-lead ECG monitors for viewing signals over a narrow range of amplitudes. Through the AGC module **265**, the gain of signals recorded by the monitor recorder **14** of the wearable monitor **12** can be attenuated up (or down) to work with an FDA-approved, commercially available ECG interpretation.

AGC can be implemented in a fixed fashion that is uniformly applied to all signals in an ECG recording, adjusted as appropriate on a recording-by-recording basis. Typically, a fixed AGC value is calculated based on how an ECG recording is received to preserve the amplitude relationship between the signals. Alternatively, AGC can be varied dynamically throughout an ECG recording, where signals in different segments of an ECG recording are amplified up (or down) by differing amounts of gain.

Typically, the monitor recorder **14** will record a high resolution, low-frequency signal for the P-wave segment. However, for some patients, the result may still be a visually small signal. Although high resolution is present, the unaided eye will normally be unable to discern the P-wave segment. Therefore, gaining the signal is critical to visually depicting P-wave detail. This technique works most efficaciously with a raw signal with low noise and high resolution, as generated by the monitor recorder **14**. Automatic gain control applied to a high noise signal will only exacerbate noise content and be self-defeating.

Finally, the download station can include filtering modules specifically intended to enhance P-wave content. For instance, a P-wave base boost filter **266**, which is a form of pre-emphasis filter, can be applied to the signal to restore missing frequency content or to correct phase distortion. Still other filters and types of signal processing are possible.

The monitor recorder **14** continuously monitors the patient's heart rate and physiology. FIG. **13** is a flow diagram showing a monitor recorder-implemented method **100** for monitoring ECG data and syncope data for use in the monitor recorder **14** of FIG. **4**. Initially, upon being connected to the set of pads **34** provided with the non-conductive receptacle **25** when the monitor recorder **14** is snapped into place, the microcontroller **61** executes a power up sequence (step **101**). During the power up sequence, the

voltage of the battery **71** is checked, the state of the flash memory **62** is confirmed, both in terms of operability check and available capacity, and microcontroller operation is diagnostically confirmed. In a further embodiment, an authentication procedure between the microcontroller **61** and the electrode patch **15** are also performed.

Following satisfactory completion of the power up sequence, an iterative processing loop (steps **102**-**113**) is continually executed by the microcontroller **61**. During each iteration (step **102**) of the processing loop, the ECG frontend **63**, as further described with reference to FIG. **9**, continually senses the cutaneous ECG electrical signals (step **103**) via the ECG electrodes **38**, **29** and is optimized to maintain the integrity of the P-wave. A sample of the ECG signal is read (step **104**) by the microcontroller **61** by sampling the analog ECG signal that is output by the ECG front end circuit **63**. FIG. **14** is a graph showing, by way of example, a typical ECG waveform **270**. The x-axis represents time in approximate units of tenths of a second. The y-axis represents cutaneous electrical signal strength in approximate units of millivolts. The P-wave **271** has a smooth, normally upward, that is, positive, waveform that indicates atrial depolarization. The QRS complex often begins with the downward deflection of a Q-wave **272** followed by a larger upward deflection of an R-wave **273** and is terminated with a downward waveform of the S-wave **274**, collectively representative of ventricular depolarization. The T-wave **275** is normally a modest upward waveform, representative of ventricular depolarization, while the U-wave **276**, often not directly observable, indicates the recovery period of the Purkinje conduction fibers.

Sampling the R-to-R interval enables heart rate information derivation. For instance, the R-to-R interval represents the ventricular rate and rhythm, while the P-to-P interval represents the atrial rate and rhythm. Importantly, the PR interval is indicative of atrioventricular (AV) conduction time, and abnormalities in the PR interval can reveal underlying heart disorders, which is another reason that the P-wave quality achievable by the ambulatory electrocardiography monitoring patch optimized for capturing low-amplitude cardiac action potential propagation described herein is medically unique and important. The long-term observation of these ECG indicia, as provided through extended wear of the wearable monitor **12**, provides valuable insights into the patient's cardiac function symptoms and overall well-being.

Referring back to FIG. **13**, the monitor recorder **14** also receives data from a syncope sensor. During each iteration (step **102**) of the processing loop, the syncope sensor monitors a patient's movement as well as the presence of patient feedback from the tactile syncope feedback button **66** and detects if there is a syncope event, such as an event that is approximately coincident with a cardiovascular episode, that should be recorded as part of the monitoring. If a syncope event is detected through the actigraphy-based syncope sensor **64** (step **105**), the actigraphy-based syncope sensor **64** provides a signal to the microprocessor **61**, and the microprocessor **61** reads the data sample that includes the syncope event data (step **106**). If a syncope event is detected through the tactile syncope feedback button **66** (step **107**), the tactile syncope feedback button **66** provides a signal to the microprocessor **61**, and the microprocessor **61** reads the syncope event data (step **108**). If no such syncope events are detected, the method **100** proceeds to step **109**. Each sampled ECG signal and any syncope event data in quantized and digitized form are temporarily staged in a buffer (step **109**), pending compression preparatory to storage in the flash memory **62** (step **110**). Following compression, the compressed ECG digitized sample and any syncope event data are again buffered (step **111**), then written to the flash memory **62** (step **112**) using the communications bus. Processing continues (step **113**) so long as the monitoring recorder **14** remains connected to the electrode patch **15** (and storage space remains available in the flash memory **62**), after which the processing loop is exited (step **113**) and execution terminates. This design provides an automatic time-correlation between a syncope event and the corresponding ECG data. No additional software is needed to synchronize the syncope data and ECG data, resulting in an efficient monitor recorder **14** and simplified post-recording processing. Still other operations and steps are possible. In a further embodiment, the syncope event data are read and stored through a conceptually-separate execution thread as part of the iterative processing loop.

The monitor recorder **14** stores ECG data and other information in the flash memory subsystem **62**, as further described with reference to FIG. **9**, using a proprietary format that includes data compression. As a result, data retrieved from a monitor recorder **14** must first be converted into a format suitable for use by third party post-monitoring analysis software. FIG. **15** is a flow diagram showing a method **150** for offloading and converting ECG and other physiological data from of an ambulatory extended-wear electrocardiography and syncope sensor monitor in accordance with one embodiment. The method **150** can be implemented in software, and execution of the software can be performed on a download station **125**, which could be a programmer, other device, or a computer system, including a server **122** or personal computer **129**, such as further described supra with reference to FIG. **11**, as a series of process or method modules or steps. For convenience, the method **150** will be described in the context of being performed by a personal computer **136** or other connectable computing device, as further described with reference to FIG. **11**, as middleware that converts syncope and ECG data as well as other information into a format suitable for use by a third-party post-monitoring analysis program. Execution of the method **150** by another computer system or download station **125** would be analogous mutatis mutandis.

Initially, the download station **125** is connected to the monitor recorder **14** (step **151**), such as by physically interfacing with a set of terminals **128** on a paired receptacle **127** or by a wireless connection, if available. The data stored on the monitor recorder **14**, including ECG, physiological monitoring, and patient-mediated tactile feedback data, as well as other recorded data and other information are retrieved (step **152**) over a hard link **135** using a control program **137** ("Ctl") or analogous application executing on a personal computer **136** or other connectable computing device.

The data retrieved from the monitor recorder **14** is in a proprietary storage format and each datum of recorded ECG monitoring data, as well as any other physiological data or other information, must be converted, so that the data can be used by a third-party post-monitoring analysis program. Each datum of ECG monitoring data is converted by the middleware (steps **153-158**) in an iterative processing loop. During each iteration (step **153**), the ECG datum is read (step **154**) and, if necessary, the gain of the ECG signal is adjusted (step **155**) to compensate, for instance, for relocation or replacement of the electrode patch **15** during the monitoring period. Filtering described below with reference to FIG. **18** can also optionally take place during step **155**.

In addition, depending upon the configuration of the wearable monitor **12**, other physiological data (or other information), including patient events, such as air flow events, fall, peak activity level, sleep detection, and detection of patient activity levels and states, may be recorded along with the ECG monitoring data, which is read (step **156**) and time-correlated to the ECG monitoring. For instance, syncope data may have been collected by the patient-mediated syncope tactile feedback button **66** or the actigraphy-based syncope sensor **64** based on a sensed event, such as a sudden change in orientation due to the patient taking a fall or a sudden postural change. In response, the monitor recorder **14** will embed the syncope data into the stream of data, including ECG monitoring data, that are recorded to the flash memory **62** by the micro-controller **61**. Post-monitoring, the syncope data are temporally matched to the ECG data to provide the proper physiological context to the sensed event. Additional types of processing for the other physiological data (or other information) are possible.

Thus, during execution of the middleware, any other physiological data (or other information) that has been embedded into the recorded ECG monitoring data are read (step **156**) and time-correlated to the time frame of the ECG signals that occurred at the time that the other physiological data (or other information) were noted. Finally, the ECG datum, for which the signal gain has been adjusted, if appropriate, and other physiological data, if applicable and as time-correlated, are stored in a format suitable to the backend software (step **157**) used in post-monitoring analysis.

In a further embodiment, the other physiological data, if apropos, are embedded within an unused ECG track. For example, the SCP-ENG standard allows multiple ECG channels to be recorded into a single ECG record. However, the monitor recorder **14** only senses one ECG channel. The other physiological data can be stored into an additional ECG channel, which would otherwise be zero-padded or altogether omitted. One example of the other physiological data is actigraphy data. The backend software would then be able to read the other physiological data in context with the single channel of ECG monitoring data recorded by the monitor recorder **14**, provided the backend software implemented changes necessary to interpret the other physiological data. Still other forms of embedding the other physiological data with formatted ECG monitoring data or providing the other physiological data in a separate manner are possible. Processing continues (step **158**) for each remaining ECG datum, after which the processing loop is exited and execution terminates. Still other operations and steps are possible.

The collection of the ECG data as described above and as described in a commonly assigned U.S. patent application, entitled "Extended Wear Ambulatory Electrocardiography and Physiological Sensor Monitor," Ser. No. 14/080,725, filed Nov. 14, 2013, pending, the disclosure of which is incorporated by reference, allows acquisition of ECG data collected over an extended period of time and, when combined the recording of syncope events, simplifies monitoring for episodes of cardiac-based and other syncope conditions. The occurrence of syncope events and ECG data are monitored by the monitor recorder **14** through the syncope sensor. The data collected by the monitor recorder **14** can be further processed by the application software to correlate the syncope data with ECG and other physiological data, if applicable. FIG. **16** is a flow diagram showing a method **160** for processing syncope data collected by a monitor recorder **14** in accordance with one embodiment. The converted syncope data include patient-mediated tactile feedback and actigraphy-based syncope data and other physiological data, including ECG monitoring. The converted syncope and other physiological data are offloaded and converted as described supra with reference to FIG. **15**. The converted syncope and other physiological data are then retrieved by the backend software (step **161**). The backend software processes the retrieved physiological data to identify the data regarding syncope events, which include data from the tactile syncope feedback button **66** and the data from the actigraphy-based syncope sensor **66** that are indicative of a fall or postural change (step **162**). For instance, a common cause for cardiac-based syncope, cardiac arrhythmias are defined by P-wave morphology and their relationship to QRS intervals. For instance, atrial fibrillation (AF), an abnormally rapid heart rhythm, can be confirmed by the presence of erratic atrial activity or the absence of distinct P-waves and an irregular ventricular rate. Atrial flutter can be diagnosed with characteristic "sawtooth" P-waves often occurring twice for each QRS wave. Some congenital supraventricular tachycardias, like AV node re-entry and atrioventricular reentrant tachycardia using a concealed bypass tract, are characterized by an inverted P-wave occurring shortly after the QRS wave. Similarly, a sinoatrial block is characterized by a delayed onset of P-waves, while a junctional rhythm, which is an abnormal heart rhythm due impulses from tissue located in the AV node area, usually presents without P-waves or with inverted P-waves within or shortly before or after the QRS wave. Further, P-wave amplitudes are valuable for diagnosis. The presence of broad, notched P-waves can indicate left atrial enlargement or disease. Conversely, the presence of tall, peaked P-waves, especially in the initial half, can indicate right atrial enlargement. Finally, P-waves with increased amplitude can indicate hypokalemia, which is caused by low blood potassium, whereas P-waves with decreased amplitude can indicate hyperkalemia, which is caused by elevated blood potassium. P-wave analyses are also used in diagnosing other medical disorders, including blood chemistry imbalance.

Both the occurrence of a syncope event and the patient's ECG monitoring data as well as any other available physiological data that may be of diagnostic interest are identified (step **163**).

Other types of physiological data may include data recorded by other physiology sensors, including the SpO_2 sensor, blood pressure sensor, temperature sensor, glucose sensor, airflow sensor, volumetric pressure sensing, or other types of sensor or telemetric input sources. In this example, if a blood pressure sensor were available to record blood pressure substantially concurrent to monitoring ECG and syncope data, the retrieved blood pressure data would be temporally aligned with the syncope and other physiological data relating to the patient's syncope event and, thereby, aid in diagnostic efficacy. Blood pressure recorded by a blood pressure sensor may provide the proper physiological context to the sensed event because other physiological events may be used to aid in distinguishing certain true syncope events from, for example, a seizure, which can present as an apparent syncope event. Further, glucose concentration recorded by a glucose sensor would be temporally matched to the monitoring ECG data and aid in distinguishing metabolic events, including hypoglycemia, which can present as an apparent syncope, from true syncope. In addition, recording a patient's airflow in tandem with a syncope event may also aid in distinguishing a hyperventilation metabolic event from a true syncope event. Optionally, these other physiological data may be processed according to diagnostic and prognostic values of the data (step **164**).

Following the optional processing of other contemporaneous data, the type of syncope event can also be detected optionally (step **165**), as further described with reference to FIG. **25**. As cardiac-based syncope is associated with the highest mortality rate, the distinction between cardiac-based syncope and both non-cardiac-based syncope events as well as apparent syncope events that are not true syncope, such as seizures, hypoglycemia, and hyperventilation, is an important distinction. Where an abnormal ECG baseline is recorded contemporaneous with a syncope event, cardiac-based syncope is highly likely. For example, a prolonged QT interval and non-sustained polymorphic ventricular tachycardia concurrent to a syncopal event may indicate Long QT Syndrome; whereas a concurrent short PR interval, delta wave, and syncopal event suggests Wolffe-Parkinson-White syndrome; syncope contemporaneous with a right bundle branch block pattern and ST segment elevation indicates Brugada syndrome; syncope in tandem with a PR interval that is not followed by a QRS complex may indicate a high-grade AV block; and syncope paired with a T-wave inversion may suggest ischemia or cardiomyopathy. Thus, after other physiological data are processed, the ECG data that are contemporaneous to the syncope event are analyzed, and the method **160** determines whether the type of syncope event (step **165**), as further described with reference to FIG. **25**. Finally, the syncope event information as well as approximately concurrent ECG and other physiological data is output to a user, such as a physician, such as though a screen of a personal computer **129** (step **166**). The output information can include the time the events occurred, the duration of the events, the type of the event (for example, cardiac-based or non-cardiac-based syncope), the magnitude of the syncope abnormality during the event, and information about the identified concurrent ECG and other physiological data. Any events identified based on the ECG and other physiological data can also be output to the user. In a further embodiment, ECG and other physiological data that is not substantially contemporaneous to the syncope events is also output to the user. Still other operations and steps are possible. Other types of processing the other physiological data are possible.

FIG. **25** is a flow diagram showing a routine **240** for identifying a type of a syncope event for use in the method of FIG. **16** in accordance with one embodiment. ECG data contemporaneous to the identified syncope event is analyzed (step **241**). Where an abnormal ECG baseline is present (step **242**), the syncope event is identified as indicative of a cardiac-based syncope event (step **243**), but where an abnormal baseline is not present (step **242**), the syncope event is identified not indicative of a cardiac-based syncope event (step **244**). Optionally, routine **240** proceeds to step **245**, where the routine **240** then uses any additional physiological data to determine the type syncope event, such as non-cardiac, apparent syncope that is due to low glucose. Apparent syncope due to low glucose may be diagnosed through recording a low blood glucose concentration concurrent with apparent syncope. A second example of additional physiological data that may aid in diagnosing syncope is respiratory data; respiratory data that suggest hyperventilation and are concurrent with apparent syncope data may indicate a metabolic, hyperventilation basis for apparent syncope. Still other embodiments are possible.

Moreover, as indicated supra, many embodiments for the patch and monitor are also possible. Conventional ECG monitors, such as Holter monitors, invariably require specialized training on proper placement of leads and on the operation of recording apparatuses, plus support equipment purpose-built to retrieve, convert, and store ECG monitoring data. In contrast, the wearable monitor **12** simplifies monitoring from end to end, beginning with placement, then with use, and, finally, with data retrieval. FIGS. **23**A-C are functional block diagrams, respectively, showing practical uses **210**, **220**, **230** for the wearable monitors **12** of FIGS. **1** and **2**. The combination of a flexible extended wear electrode patch and a removable reusable (or single use) monitor recorder empowers physicians and patients with the ability to readily perform long-term ambulatory ECG, syncope, and physiology monitoring.

Especially compared with existing Holter-type monitors and monitoring patches placed in the upper pectoral region, the wearable monitor **12** offers superior patient comfort as well as convenience and is user-friendly. First, the electrode patch **15** is specifically designed for ease of use by a patient (or caregiver); assistance by professional medical personnel is not required. Moreover, the patient is free to replace the electrode patch **15** at any time and need not wait for a doctor's appointment to have a new electrode patch **15** placed. In addition, the monitor recorder **14** operates automatically, and the patient only need snap the monitor recorder **14** into place on the electrode patch **15** to initiate ECG monitoring. Thus, based on the synergistic combination of the electrode patch **15** and monitor recorder **14**, using the wearable monitor **12** is a reliable and virtually foolproof way to monitor a patient's ECG, syncope, and physiology for an extended, or even open-ended, period of time.

In simplest form, extended wear monitoring can be performed using the same monitor recorder **14** inserted into a succession of fresh new electrode patches **15**. As needed, the electrode patch **15** can be replaced by the patient (or caregiver) with a fresh new electrode patch **15** throughout the overall monitoring period. Referring first to FIG. **24**A, at the outset of monitoring, a patient adheres a new electrode patch **15** in a location at the sternal midline **16** (or immediately to either side of the sternum **13**) oriented top-to-bottom (step **211**). The placement of the wearable monitor in a location at the sternal midline (or immediately to either side of the sternum), with a unique narrow "hourglass"-like shape, significantly improves the ability of the wearable monitor to cutaneously sense cardiac electrical potential signals, particularly the P-wave (or atrial activity) and, to a lesser extent, the QRS interval signals that indicate ventricular activity in the ECG waveforms.

Placement involves simply adhering the electrode patch **15** on the skin along the sternal midline **16** (or immediately to either side of the sternum **13**). Patients can easily be taught to find the physical landmarks on the body necessary for proper placement of the electrode patch **15**. The physical landmarks are locations on the surface of the body that are already familiar to patients, including the inter-mammary cleft between the breasts above the manubrium (particularly easily locatable by women and gynecomastic men), the sternal notch immediately above the manubrium, and the Xiphoid process located at the bottom of the sternum. Empowering patients with the knowledge to place the electrode patch **15** in the right place ensures that the ECG electrodes will be correctly positioned on the skin, no matter the number of times that the electrode patch **15** is replaced.

A monitor recorder **14** is snapped into the non-conductive receptacle **25** on the outward-facing surface of the electrode patch **15** (step **212**). The monitor recorder **14** draws power externally from a battery provided in the non-conductive receptacle **25**. In addition, the battery is replaced each time that a fresh new electrode patch **15** is placed on the skin, which ensures that the monitor recorder **14** is constantly operating with a fresh power supply and minimizes the chances of a loss of monitoring continuity due to a depleted battery source.

By default, the monitor recorder **14** automatically initiates monitoring upon sensing body surface potentials through the pair of ECG electrodes (step **213**). In a further embodiment, the monitor recorder **14** can be configured for manual operation, such as by using the tactile syncope feedback button **66** on the outside of the sealed housing **50** or other user-operable control. In an even further embodiment, the monitor recorder **14** can be configured for remotely-controlled operation by equipping the monitor recorder **14** with a wireless transceiver, such as described in commonly-assigned U.S. patent application, entitled "Remote Interfacing of an Extended Wear Electrocardiography and Physiological Sensor Monitor," Ser. No. 14/082,071, filed Nov. 15, 2013, pending, the disclosure of which is incorporated by reference. The wireless transceiver allows wearable or mobile communications devices to wirelessly interface with the monitor recorder **14**.

A key feature of the extended wear wearable monitor **12** is the ability to monitor ECG and physiological data for an extended period of time, which can be well in excess of the 14 days currently proposed as achievable by conventional ECG monitoring approaches. In a further embodiment, ECG monitoring can even be performed over an open-ended time period, as further explained infra. The monitor recorder **14** is reusable and, if so desired, can be transferred to successive electrode patches **15** to ensure continuity in monitoring. At any point during ECG monitoring, a patient (or caregiver) can remove the monitor recorder **14** (step **214**) and replace the electrode patch **15** currently being worn with a fresh new electrode patch **15** (step **211**). The electrode patch **15** may need to be replaced for any number of reasons. For instance, the electrode patch **15** may begin to come off after a period of wear, or the patient may have skin that is susceptible to itching or irritation. Wearing ECG electrodes can aggravate such skin conditions. Thus, a patient may want or need to periodically remove or replace ECG electrodes during a long-term ECG monitoring period, whether to replace a dislodged electrode, reestablish better adhesion, alleviate itching or irritation, allow for cleaning the skin, allow for showering and exercise, or for other purpose.

Following replacement, the monitor recorder **14** is again snapped into the electrode patch **15** (step **212**) and monitoring resumes (step **213**). The ability to transfer the same monitor recorder **14** to successive electrode patches **15** during a period of extended wear monitoring is advantageous, not only for diagnosing cardiac rhythm disorders and other physiological events of potential concern, but also for extremely long term monitoring, such as following up on cardiac surgery, ablation procedures, or medical device implantation. In these cases, several weeks of monitoring or more may be needed. In addition, certain IMDs, such as pacemakers or implantable cardioverter defibrillators, incorporate a loop recorder that will capture cardiac events over a fixed time window. If the telemetry recorded by the IMD is not downloaded in time, cardiac events that occurred at a time preceding the fixed time window will be overwritten by the IMD and, therefore, lost. The monitor recorder **14** provides continuity of monitoring that acts to prevent loss of cardiac event data. In a further embodiment, the firmware executed by the microcontroller **61** of the monitor recorder **14** can be optimized for minimal power consumption and additional flash memory for storing monitoring data can be added to produce a multi-week monitor recorder **14** that can be snapped into a fresh new electrode patch **15** every seven days, or other interval, for weeks or even months.

Upon the conclusion of monitoring, the monitor recorder **14** is removed (step **214**), and the recorded ECG and physiological telemetry are downloaded (step **215**). For instance, a download station can be physically interfaced to the external connector **65** of the monitor recorder **14** to initiate and conduct downloading, as described supra with reference to FIG. **18**.

In a further embodiment, the monitoring period can be of indeterminate duration. Referring next to FIG. **24**B, a similar series of operations are followed with respect to replacement of electrode patches **15**, reinsertion of the same monitor recorder **14**, and eventual download of ECG and physiological telemetry (steps **221**-**225**), as described supra with reference to FIG. **24**A. However, the flash memory **62**, as further described with reference to FIG. **9**, in the circuitry **60** of the monitor recorder **14** has a finite capacity. Following a successful download of stored data, the flash memory **62** can be cleared to restore storage capacity, and monitoring can resume, either by first adhering a new electrode patch **15** (step **221**) or by snapping the monitor recorder **14** into an already-adhered electrode patch **15** (step **222**). The foregoing expanded series of operations to include reuse of the same monitor recorder **14** following data download, which allows monitoring to continue indefinitely without the types of interruptions that often affect conventional approaches, including retrieving monitoring data only through making an appointment with a medical professional.

In a still further embodiment, when the monitor recorder **14** is equipped with a wireless transceiver, the use of a download station can be skipped. Referring last to FIG. **24**C, a similar series of operations are followed with respect to replacement of electrode patches **15** and reinsertion of the same monitor recorder **14** (step **231**-**234**), as described supra with reference to FIG. **24**A. However, recorded ECG and physiological telemetry are downloaded wirelessly (step **235**), such as described in commonly-assigned U.S. patent application Ser. No. 14/082,071, cited supra. The recorded ECG and physiological telemetry can even be downloaded wirelessly directly from a monitor recorder **14** during monitoring while still snapped into the non-conductive receptacle **25** on the electrode patch **15**. The wireless interfacing enables monitoring to continue for an open-ended period of time, as the downloading of the recorded ECG and physiological telemetry will continually free up onboard storage space. Further, wireless interfacing simplifies patient use, as the patient (or caregiver) only need worry about placing (and replacing) electrode patches **15** and inserting the monitor recorder **14**. Still other forms of practical use of the extended wear electrocardiography monitors **12** are possible.

The circuit trace and ECG electrodes components of the electrode patch **15** can be structurally simplified. In a still further embodiment, the flexible circuit **32**, as further described with reference to FIG. **5**, and distal ECG electrode **38** and proximal ECG electrode **39**, as further described with reference to FIG. **6**, are replaced with a pair of interlaced flexile wires. Interlacing of flexile wires through the flexible backing **20** reduces both manufacturing costs and environmental impact, as further described infra. The flexible circuit and ECG electrodes are replaced with a pair of flexile wires that serve as both electrode circuit traces and electrode signal pickups. FIG. **19** is a perspective view **180** of an extended wear electrode patch **15** with a flexile wire electrode assembly in accordance with a still further embodiment. The flexible backing **20** maintains the unique narrow "hourglass"-like shape that aids long term extended wear, particularly in women, as described supra with reference to FIG. **4**. For clarity, the non-conductive receptacle **25** is omitted to show the exposed battery printed circuit board **182** that is adhered underneath the non-conductive receptacle **25** to the proximal end **31** of the flexible backing **20**. Instead of employing flexible circuits, a pair of flexile wires are separately interlaced or sewn into the flexible backing **20** to serve as circuit connections for an anode electrode lead and for a cathode electrode lead.

To form a distal electrode assembly, a distal wire **181** is interlaced into the distal end **30** of the flexible backing **20**, continues along an axial path through the narrow longitudinal midsection of the elongated strip, and electrically connects to the battery printed circuit board **182** on the proximal end **31** of the flexible backing **20**. The distal wire **181** is connected to the battery printed circuit board **182** by stripping the distal wire **181** of insulation, if applicable, and interlacing or sewing the uninsulated end of the distal wire **181** directly into an exposed circuit trace **183**. The distal wire-to-battery printed circuit board connection can be made, for instance, by back stitching the distal wire **181** back and forth across the edge of the battery printed circuit board **182**. Similarly, to form a proximal electrode assembly, a proximal wire (not shown) is interlaced into the proximal end **31** of the flexible backing **20**. The proximal wire is connected to the battery printed circuit board **182** by stripping the proximal wire of insulation, if applicable, and interlacing or sewing the uninsulated end of the proximal wire directly into an exposed circuit trace **184**. The resulting flexile wire connections both establish electrical connections and help to affix the battery printed circuit board **182** to the flexible backing **20**.

The battery printed circuit board **182** is provided with a battery compartment **36**. A set of electrical pads **34** are formed on the battery printed circuit board **182**. The electrical pads **34** electrically interface the battery printed circuit board **182** with a monitor recorder **14** when fitted into the non-conductive receptacle **25**. The battery compartment **36** contains a spring **185** and a clasp **186**, or a similar assembly, to hold a battery (not shown) in place and electrically interfaces the battery with the electrical pads **34** through a pair battery leads **187** to power the electrocardiography monitor **14**. Other types of battery compartment are possible. The battery contained within the battery compartment **36** can be replaceable, rechargeable, or disposable.

In a further embodiment, the circuit board and non-conductive receptacle **25** are replaced by a combined housing that includes a battery compartment and a plurality of electrical pads. The housing can be affixed to the proximal end of the elongated strip through the interlacing or sewing of the flexile wires or other wires or threads.

The core of the flexile wires may be constructed from a solid, stranded, or braided conductive metal or metal compounds. In general, a solid wire will be less flexible than a stranded wire with the same total cross-sectional area, but will provide more mechanical rigidity than the stranded wire. The conductive core may be copper, aluminum, silver, or other material. The pair of the flexile wires may be provided as insulated wire. In one embodiment, the flexile wires are constructed from a magnet wire from Belden Cable, catalogue number 8051, with a solid core of AWG 22, bare copper as conductor material, and insulation using polyurethane or nylon. Still other types of flexile wires are possible. In a further embodiment, conductive ink or graphene can be used to print electrical connections, either in combination with or in place of the flexile wires.

In a still further embodiment, the flexile wires are uninsulated. FIG. **20** is perspective view of the flexile wire electrode assembly from FIG. **19** with a layer of insulating material **189** shielding a bare uninsulated distal wire **181** around the midsection on the contact side of the flexible backing. On the contact side of the proximal and distal ends of the flexible backing, only the portions of the flexile wires that serves as electrode signal pickups are electrically exposed, and the remaining flexile wire on the contact side outside of the proximal and distal ends is shielded from electrical contact. The bare uninsulated distal wire **181** may be insulated using a layer of plastic, rubber-like polymers, or varnish, or by an additional layer of gauze or adhesive (or non-adhesive) gel. The bare uninsulated wire **181** on the non-contact side of the flexible backing may be insulated or simply remain uninsulated.

Both end portions of the pair of flexile wires are typically placed uninsulated on the contact surface of the flexible backing **20** to form a pair of electrode signal pickups. FIG. **21** is a bottom view **190** of the flexile wire electrode assembly of FIG. **19**. When adhered to the skin during use, the uninsulated end portions of the distal wire **181** and the proximal wire **191** enable the monitor recorder **14** to measure dermal electrical potential differentials. At the proximal and distal ends of the flexible backing **20**, the uninsulated end portions of the flexile wires may be configured into an appropriate pattern to provide an electrode signal pickup, which would typically be a spiral shape formed by guiding the flexile wire along an inwardly spiraling pattern. The surface area of the electrode pickups can also be variable, such as by selectively removing some or all of the insulation on the contact surface. For example, an electrode signal pickup arranged by sewing insulated flexile wire in a spiral pattern could have a crescent-shaped cutout of uninsulated flexile wire facing towards the signal source.

In a further embodiment, the flexile wires remain freely riding on the contact surfaces on the distal and proximal ends of the flexible backing, rather than being interlaced into the ends of the flexible backing **20**. FIG. **22** is a bottom view **200** of a flexile wire electrode assembly in accordance with a still yet further embodiment. The distal wire **181** is interlaced onto the midsection and extends an exposed end portion **192** onto the distal end **30**. The proximal wire **191** extends an exposed end portion **193** onto the proximal end **31**. The exposed end portions **192** and **193**, which are not shielded with insulation, are further embedded within an electrically conductive adhesive **201**. The adhesive **201** makes contact to skin during use and conducts skin electrical potentials to the monitor recorder **14** (not shown) via the flexile wires. The adhesive **201** can be formed from electrically conductive, non-irritating adhesive, such as hydrocolloid.

The distal wire **181** is interlaced or sewn through the longitudinal midsection of the flexible backing **20** and takes the place of the flexible circuit **32**. FIG. **23** is a perspective view showing the longitudinal midsection of the flexible backing of the electrode assembly of FIG. **19**. Various stitching patterns may be adopted to provide a proper combination of rigidity and flexibility. In the simplest form, the distal wire **181** can be manually threaded through a plurality of holes provided at regularly-spaced intervals along an axial path defined between the battery printed circuit board **182** (not shown) and the distal end **30** of the flexible backing **20**. The distal wire **181** can be threaded through the plurality of holes by stitching the flexile wire as a single “thread.” Other types of stitching patterns or stitching of multiple “threads” could also be used, and a sewing machine or similar device can be used to machine-stitch the distal wire **181** into place, as further described infra. Further, the path of the distal wire **181** need not be limited to a straight line from the distal to the proximal end of the flexible backing **20**.

While the invention has been particularly shown and described as referenced to the embodiments thereof, those skilled in the art will understand that the foregoing and other changes in form and detail may be made therein without departing from the spirit and scope.

What is claimed is:

1. An electrocardiography and syncope monitoring system, comprising:

an ambulatory, extended-wear electrocardiography and syncope sensor monitor recorder, comprising:
  a sealed housing adapted to be removably secured into a non-conductive receptacle on a disposable extended wear electrode patch; and
  an electronic circuitry comprised within the sealed housing, comprising:
    an externally-powered, low-power microcontroller that is operable to execute under microprogrammable control as specified in a firmware;
    an electrocardiographic front end circuit electrically interfaced to the microcontroller and operable to sense electrocardiographic signals through electrocardiographic electrodes provided on the disposable extended wear electrode patch, each of the electrocardiographic electrodes adapted to be positioned axially along a midline of a sternum for capturing action potential propagation, the electrocardiographic front end circuit further operable to process the sensed electrocardiographic signals prior to storing samples of the processed signals, the processing comprising:
      amplifying, via a unity gain amplifier comprised in the electrocardiographic front end circuit, current of the electrocardiographic signals; and
      after the amplification of the current, amplifying voltage of the electrocardiographic signals while conditioning the electrocardiographic signals;
    a reference generator comprising a pair of resistors configured to receive power supply noise and system noise and to inject a driven reference containing the power supply noise and the system noise into a patient;
    a syncope sensor electrically interfaced with the microcontroller and operable to sense syncope events; and
    an externally-powered flash memory electrically interfaced with the microcontroller and operable to store the samples of the processed electrocardiographic signals the syncope events.

2. A system according to claim **1**, wherein:

the syncope sensor comprises an actigraphy-based syncope sensor assembly sensing actigraphy data, applying actigraphy filtering criteria to the sensed actigraphy data, identifying a portion of the actigraphy data indicative of the syncope events based on the actigraphy filtering criteria application and detecting the syncope events based on the portion of the data, providing the detected syncope event to the microcontroller, wherein the microcontroller stores the syncope events into the memory.

3. A system according to claim **2**, wherein the syncope events comprise at least one of a falling event and a postural change and the syncope sensor further comprises a patient-mediated tactile feedback syncope button.

4. A system according to claim **2**, wherein the actigraphy filtering criteria comprise a threshold of acceleration or deceleration of the sealed housing.

5. A system according to claim **2**, further comprising:
a three-axis accelerometer comprised in the actigraphy-based syncope sensor assembly.

6. A system according to claim **1**, further comprising:
a server computer system centrally accessible over a data communications network and comprising a processor configured to execute program code stored in a memory, the server computer system configured to:
retrieve the samples of the electrocardiographic signals and the syncope event data from the flash memory of the electronic circuitry;
identify those samples of the electrocardiographic signals that were sensed substantially concurrent to one of the sensed syncope events; and
output the samples of the syncope event data and the identified electrocardiographic signals.

7. A system according to claim **6**, the server computer system further configured to:
detect whether an abnormal electrocardiography baseline is associated with a syncope event based on the electrocardiographic signals; and
determine that the syncope event is indicative of one of a cardiac-based syncope type and a non-cardiac-based syncope type based on whether the abnormal baseline is associated with detection of at least one syncope event.

8. A system according to claim **6**, further comprising at least one additional sensor located at least one in the monitor recorder and the disposable patch and configured to collect physiological data comprising one or more of SpO_2, blood pressure, temperature, glucose level, air flow, and volumetric pressure, wherein the server computer system further configured to:
retrieve at least one of a physiological sample selected from the group comprising the SpO_2, the blood pressure, the temperature, the glucose level, the air flow, and the volumetric pressure;
identify those physiological samples that were sensed substantially concurrent to a time of a syncope event; and
output the syncope events and the physiological samples that were identified.

9. A system according to claim **1**, the processing further comprising:
reducing high frequency noise in the electrocardiographic signals prior to the amplification of the current;
applying a high pass filter to the electrocardiographic signals with the amplified current prior to the amplification of the voltage; and
applying an anti-aliasing low-pass filter to the electrocardiographic signals with the amplified voltage,
wherein the conditioning comprises applying a low-pass filter.

10. A system according to claim **1**, further comprising:
an analog-to-digital converter operable to convert the electrocardiographic signals into digital representations of cardiac activation wave front amplitudes;
at least one low-pass filter comprised in the firmware; and
at least one high-pass filter comprised in the firmware,
wherein the cardiac activation wave front amplitudes are passed through at least one low-pass filter and at least one high-pass filter following conversion into the digital representations.

11. A system according to claim **10**, the microcontroller further comprising:
a compression algorithm comprised in the firmware,
wherein the cardiac activation wave front amplitudes are compressed with the compression algorithm into compressed digital representations prior to being stored in the flash memory of the electronic circuitry.

12. An electrocardiography and syncope monitoring system optimized for capturing low amplitude cardiac action potential propagation, comprising:
an ambulatory, extended-wear electrocardiography and syncope sensor monitor optimized for capturing low amplitude cardiac action potential propagation, comprising:
a disposable extended wear electrode patch comprising:
a flexible backing formed of an elongated strip of stretchable material with a narrow longitudinal midsection and, on each end, a contact surface at least partially coated with an adhesive dressing provided as a crimp relief, the elongated strip being narrower at the longitudinal midsection than at the ends;
a pair of electrocardiographic electrodes conductively exposed on the contact surface of each end of the elongated strip;
a non-conductive receptacle adhered to an outward-facing end of the elongated strip and comprising a plurality of electrical pads; and
a flexible circuit affixed on each end of the elongated strip as a strain relief and comprising a pair of circuit traces electrically coupled to the pair of electrocardiographic electrodes and a pair of the electrical pads; and
a battery electrically interfaced to a different pair of the pads; and
a sealed housing adapted to be removably secured into a non-conductive receptacle on a disposable extended wear electrode patch; and
an electronic circuitry comprised within the sealed housing, comprising:
a low-power microcontroller that is operable to draw power from the battery via the different pair of the electrical pads and that is operable to execute under microprogrammable control as specified in a firmware;
an electrocardiographic front end circuit electrically interfaced to the microcontroller and operable to sense electrocardiographic signals through electrocardiographic electrodes provided on the disposable extended wear electrode patch, each of the electrocardiographic electrodes adapted to be positioned axially along a midline of a sternum for capturing action potential propagation; and
a syncope sensor electrically interfaced with the microcontroller and operable to sense syncope events, the syncope sensor comprising an actigraphy-based syncope sensor sensing actigraphy data, applying actigraphy filtering criteria to the sensed actigraphy data, identifying a portion of the actigraphy data indicative of the syncope events based on the actigraphy filtering criteria

application and detecting the syncope events based on the portion of the data, providing the detected syncope event to the microcontroller, wherein the microcontroller stores the syncope events into the memory; and

a flash memory electrically interfaced with the microcontroller and operable to store samples of the electrocardiographic signals and the syncope events, the memory further operable to draw power from the battery via the different pair of the electrical pads.

13. A system according to claim **12**, wherein the syncope sensor further comprises a patient-mediated tactile feedback syncope button.

14. A system according to claim **12**, wherein the syncope events comprise at least one of a falling event and a postural change event.

15. A system according to claim **12**, wherein the actigraphy filtering criteria comprise a threshold of acceleration or deceleration of the sealed housing.

16. A system according to claim **12**, further comprising:

a server computer system centrally accessible over a data communications network and comprising a processor configured to execute program code stored in a memory, the server configured to:

retrieve the samples of the electrocardiographic signals and the syncope event data from the flash memory of the electronic circuitry;

identify those samples of the electrocardiographic signals that were sensed substantially concurrent to one of the syncope events; and

output the samples of the syncope event data and the identified electrocardiographic signals.

17. A system according to claim **16**, the server computer system further configured to:

detect whether an abnormal electrocardiography baseline is associated with a syncope event based on the electrocardiographic signals; and

determine that the syncope event is indicative of one of a cardiac-based syncope type and a non-cardiac-based syncope type based on whether the abnormal baseline is associated with detection of at least one syncope event.

18. A system according to claim **12**, wherein the electrocardiographic front end circuit is further operable to:

reduce high frequency noise in the sensed electrocardiographic signals;

amplify current of the sensed electrocardiographic signals in which the high-frequency noise is reduced;

apply a high pass filter to the sensed electrocardiographic signals with the amplified current;

amplify voltage of the filtered electrocardiographic signals while applying a low-pass filter to the filtered electrocardiographic signals; and

apply an anti-aliasing low-pass filter to the electrocardiographic signals with the amplified voltage.

19. A system according to claim **12**, further comprising:

an analog-to-digital converter operable to convert the electrocardiographic signals into digital representations of cardiac activation wave front amplitudes;

at least one low-pass filter comprised in the firmware; and

at least one high-pass filter comprised in the firmware,

wherein the cardiac activation wave front amplitudes are passed through at least one low-pass filter and at least one high-pass filter following conversion into the digital representations.

20. A system according to claim **19**, the microcontroller further comprising:

a compression algorithm comprised in the firmware,

wherein the cardiac activation wave front amplitudes are compressed with the compression algorithm into compressed digital representations prior to being stored in the flash memory of the electronic circuitry.

* * * * *

专利名称(译)	动态延长磨损心电图和晕厥传感器监测器		
公开(公告)号	US9642537	公开(公告)日	2017-05-09
申请号	US14/684260	申请日	2015-04-10
[标]申请(专利权)人(译)	BARDY诊断		
申请(专利权)人(译)	BARDY诊断，INC.		
当前申请(专利权)人(译)	BARDY诊断，INC.		
[标]发明人	FELIX JASON BISHAY JON MIKALSON BARDY GUST H		
发明人	FELIX, JASON BISHAY, JON MIKALSON BARDY, GUST H.		
IPC分类号	A61B5/0205 A61B5/11 A61B5/00 A61B5/04 A61B5/0408 A61B5/0432 A61B5/0452 A61B5/087 A61B5/01 A61B5/021 A61B5/091 A61B5/145 G01N27/30 A61B5/1455		
CPC分类号	A61B5/02055 A61B5/0006 A61B5/0022 A61B5/04017 A61B5/0452 A61B5/04085 A61B5/04087 A61B5/04325 A61B5/04525 A61B5/1116 A61B5/1117 A61B5/1118 A61B5/4809 A61B5/6801 A61B5/6823 A61B5/6833 A61B5/01 A61B5/021 A61B5/087 A61B5/091 A61B5/14532 A61B5/14551 A61B5/7455 A61B2505/07 A61B2560/0271 A61B2560/045 A61B2560/0412 A61B2562/0219 A61B2562/164 G01N27/307 A61B5/0816 A61B5/14542		
审查员(译)	THOMSON，WILLIAM		
优先权	61/882403 2013-09-25 US		
其他公开文献	US20160213263A1		
外部链接	Espacenet USPTO		

摘要(译)

可以通过嵌入心电监护仪的晕厥传感器提供生理监测，该监测器将晕厥事件和心电图数据相关联。可以通过轻便的可穿戴监视器提供生理监测，该监视器包括两个部件，一个灵活的延长磨损电极贴片和一个可重复使用的监视器记录器，可拆卸地卡入电极贴片上的插座。可穿戴式监护仪位于胸骨中线的患者胸部中央，包括独特的“沙漏”形状，显着提高了监护仪能够快速感知心电图信号的能力，特别是P波和QRS间期信号，这表明心电图波形中的心室活动。电极贴片上的心电电极被定制用于沿着胸骨的中线轴向定位，以捕获动作电位传播，其方向对应于传统的12导联心电图中的aVF导联，其感测正P波。