US 20160066812A1

(19) **United States**

(12) **Patent Application Publication**

**Cheng et al.**

(10) **Pub. No.: US 2016/0066812 A1**

(43) **Pub. Date: Mar. 10, 2016**

(54) **STRAP BAND FOR A WEARABLE DEVICE**

(71) Applicants: **Sylvia Hou-Yan Cheng**, San Francisco, CA (US); **Michael Edward Smith Luna**, San Jose, CA (US); **Sidney Primus**, Mountain View, CA (US); **John M. Stivoric**, Pittsburgh, PA (US)

(72) Inventors: **Sylvia Hou-Yan Cheng**, San Francisco, CA (US); **Michael Edward Smith Luna**, San Jose, CA (US); **Sidney Primus**, Mountain View, CA (US); **John M. Stivoric**, Pittsburgh, PA (US)

(73) Assignee: **AliphCom**, San Francisco, CA (US)

(21) Appl. No.: **14/121,944**

(22) Filed: **Nov. 5, 2014**

**Related U.S. Application Data**

(63) Continuation-in-part of application No. 14/480,048, filed on Sep. 8, 2014.

**Publication Classification**

(51) **Int. Cl.**

| | |
|---|---|
| *A61B 5/053* | (2006.01) |
| *A61B 5/00* | (2006.01) |
| *A61B 5/024* | (2006.01) |
| *A61B 5/16* | (2006.01) |

(52) **U.S. Cl.**

CPC ............ *A61B 5/0533* (2013.01); *A61B 5/0537* (2013.01); *A61B 5/165* (2013.01); *A61B 5/4035* (2013.01); *A61B 5/681* (2013.01); *A61B 5/024* (2013.01)

(57) **ABSTRACT**

A strap band including a flexible wire bus having electrodes and wires coupled with the electrodes is described. The strap band may be coupled with a device that includes circuitry configured to drive signals on some of the electrodes and receive signals from non-driven electrodes. The signal frequency applied to driven electrodes may be varied to increase/decrease signal penetration depth to sense different body structures positioned at different depths in the body portion. Different frequencies for different types of measurements may be selected to optimize sensing of bio-impedance, galvanic skin response, hear rate, respiration, heart rate variability, hydration, inflammation, stress, and arousal in sympathetic nervous system. A system clock frequency may be one of the frequencies used. A magnitude of the drive signal, a gain on the received signal or both, may be adjusted based on the frequency selected and/or to sense signals from the body structure(s) of interest.

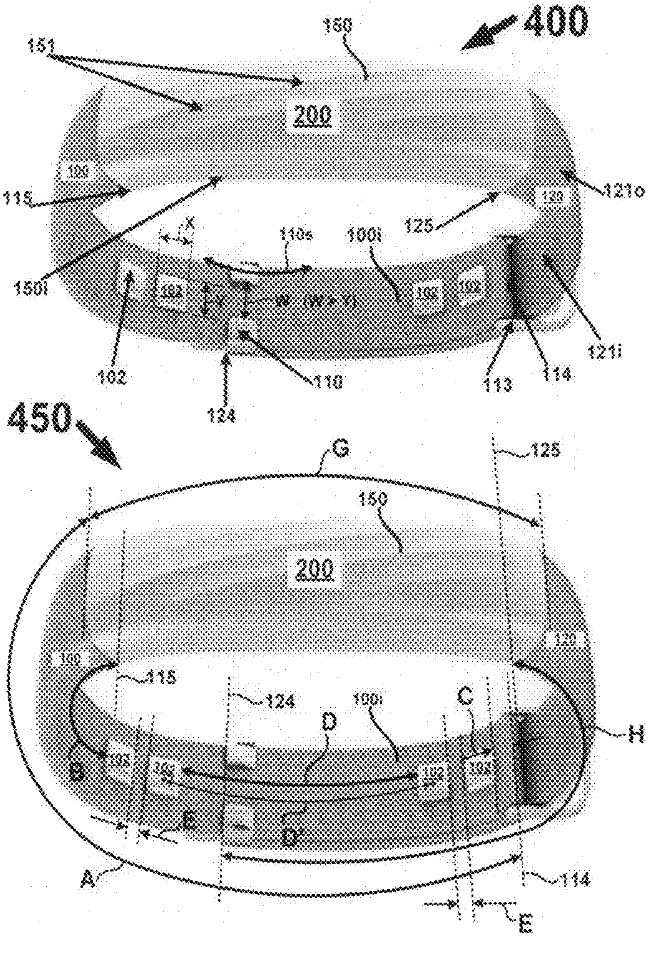

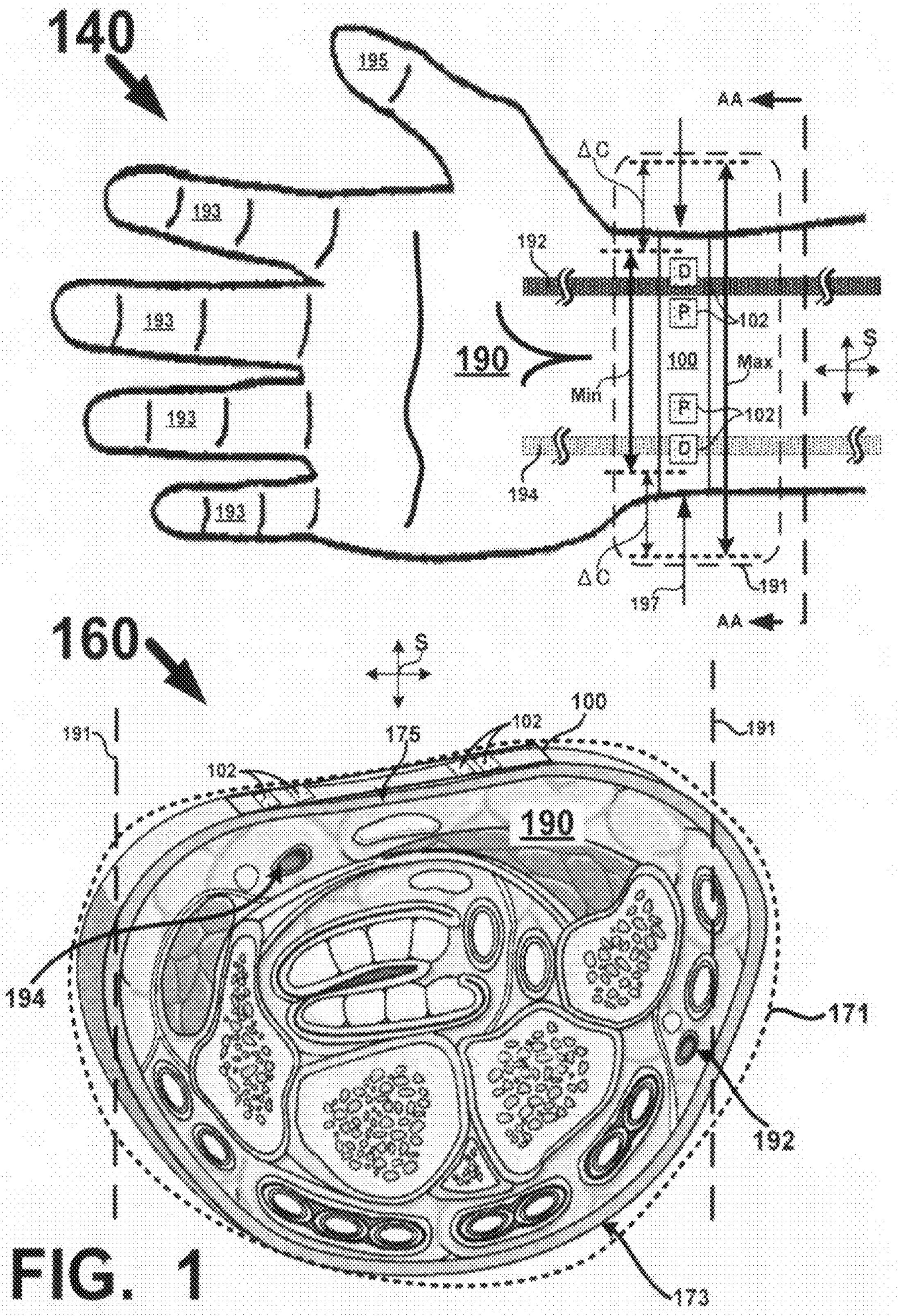
140
195
193
193
193
193
190
AA
ΔC
192
D
P
102
100
Max
Min
P
102
D
194
S
ΔC
197
191
AA
160
S
191
102
175
100
102
191
190
194
171
192
173

FIG. 1

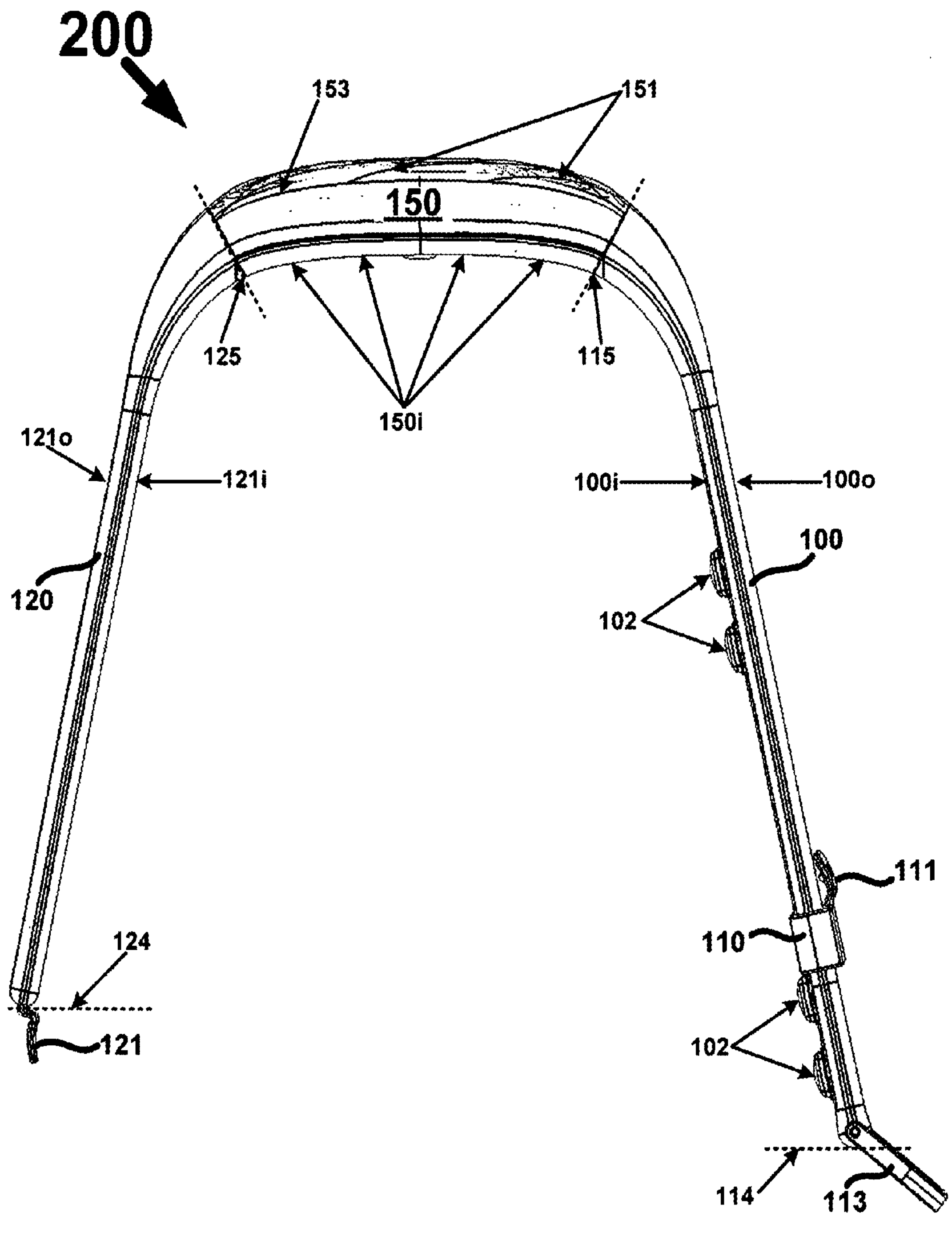
200
153
151
150
125
115
150i
121o
121i
100i
100o
100
120
102
111
110
124
121
102
114
113

FIG. 2

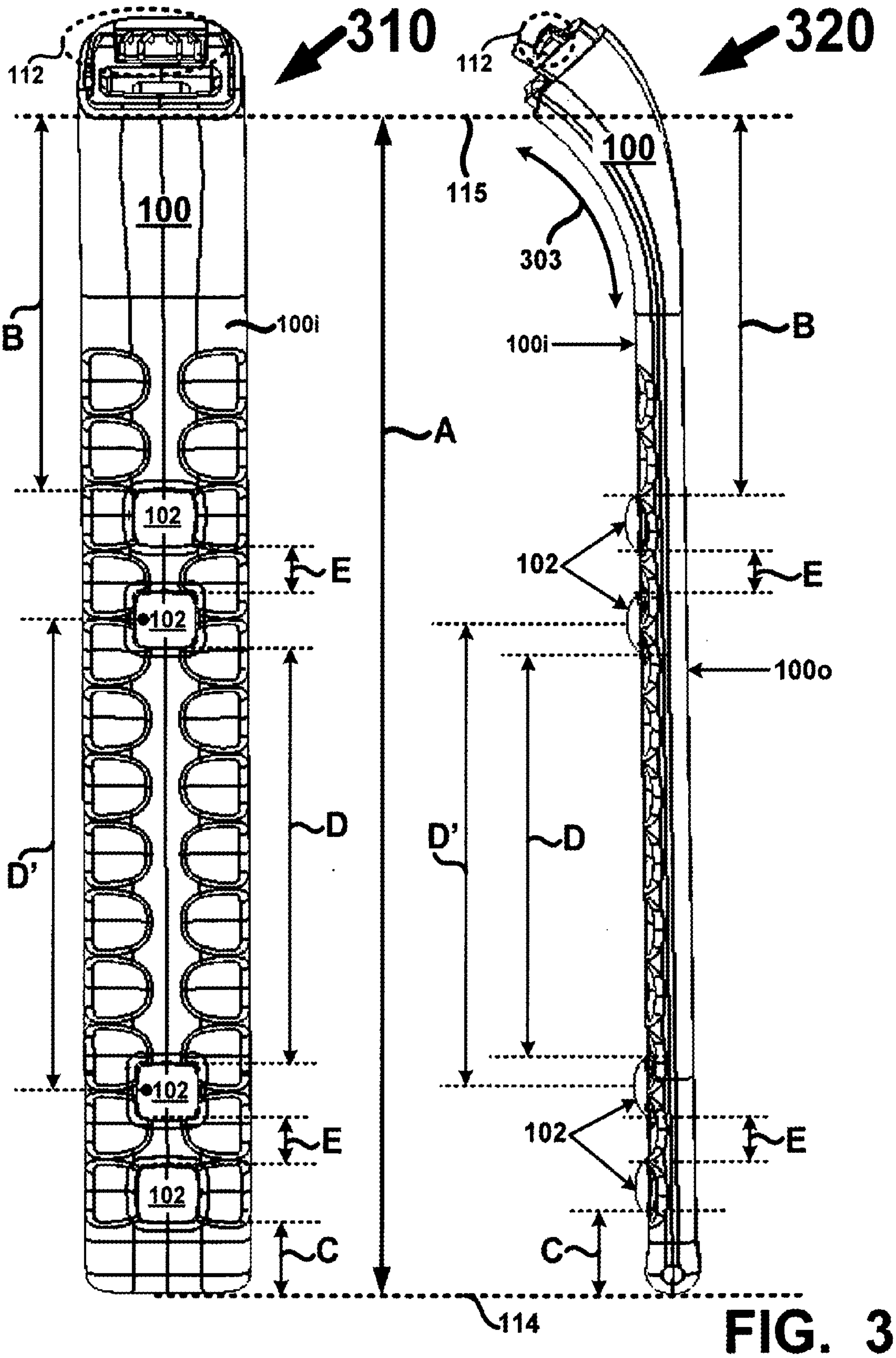
310
112
100
100i
B
A
102
E
102
D
D'
102
E
102
C
114
320
112
100
115
303
100i
B
102
E
100o
D'
D
102
E
C

FIG. 3

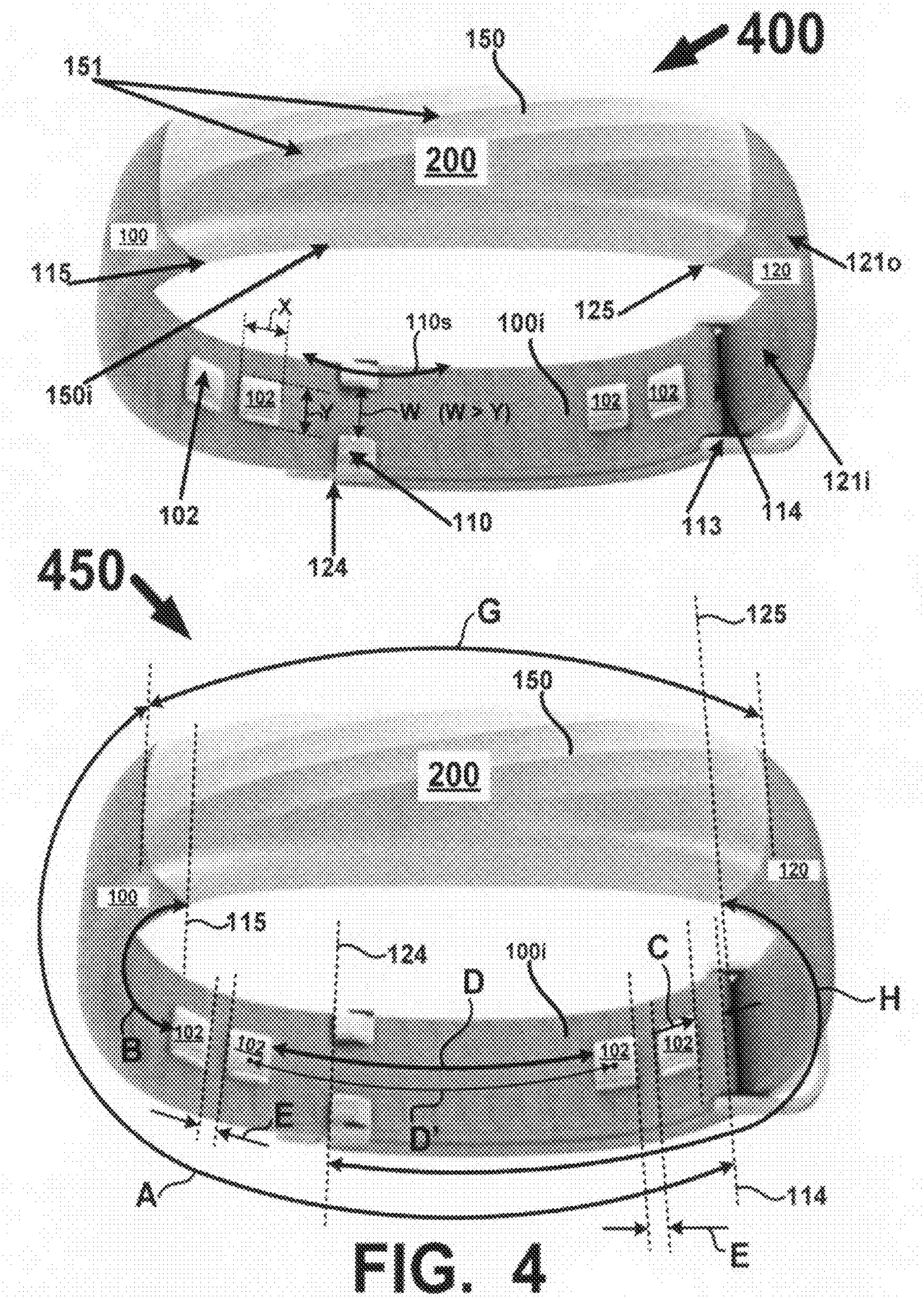
400
150
151
200
100
115
150i
120
121o
125
X
110s
100i
102
Y
W (W > Y)
102
102
102
121i
102
110
124
113
114
450
G
125
150
200
120
100
115
124
100i
C
D
H
B
102
102
102
102
E
D'
A
114
E

FIG. 4

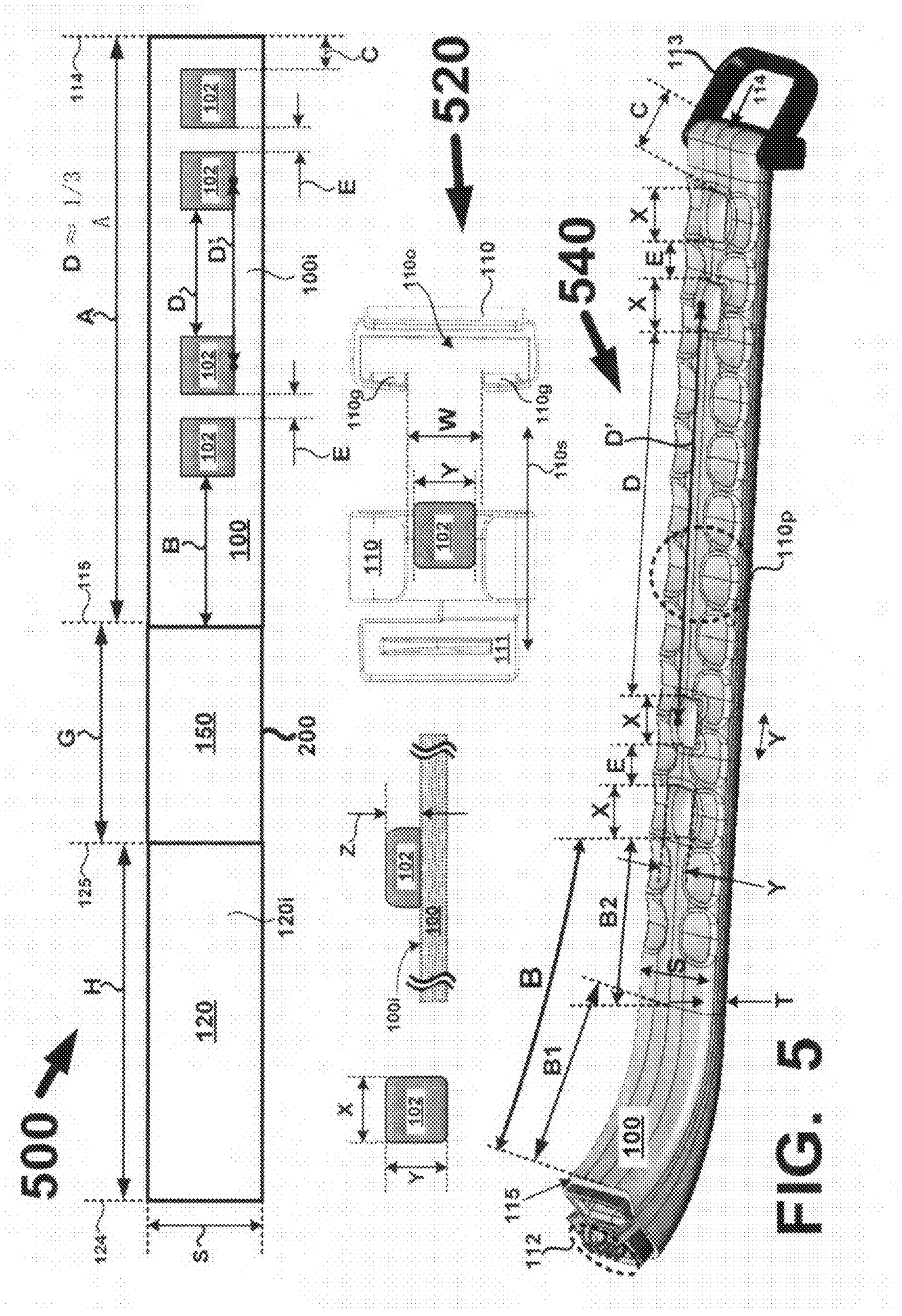
500
520
540
114
115
125
124
A
D ≈ 1/3 A
G
H
S
C
E
B
D
D'
100
100i
102
150
120
120i
200
110
110o
110g
110s
111
W
Y
X
Z
100
100i
113
114
110p
B1
B2
112
T

FIG. 5

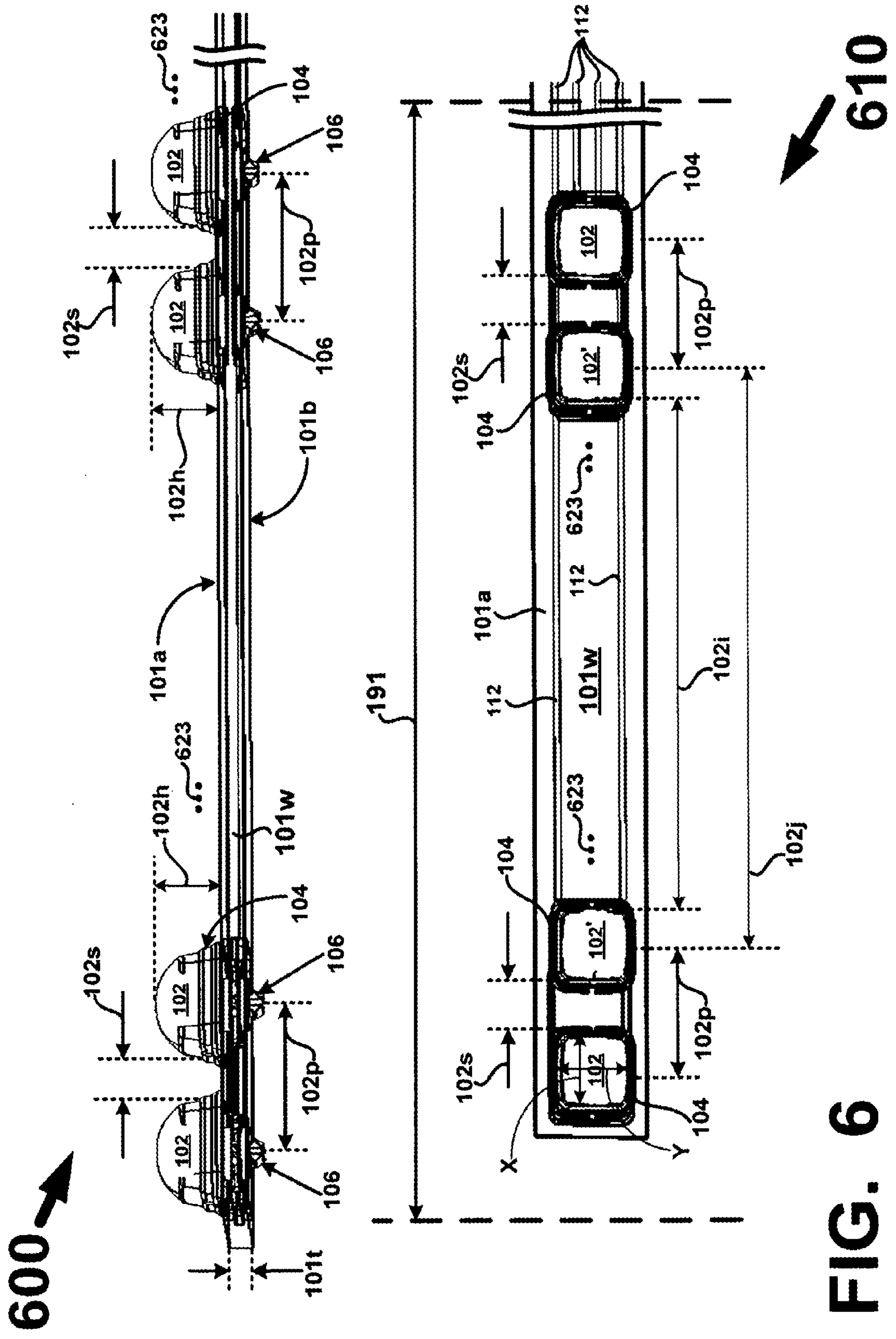
600
623
104
106
102
102s
102p
102h
101a
101b
101w
101t
191
112
102'
101w
102i
102j
X
Y
610

FIG. 6

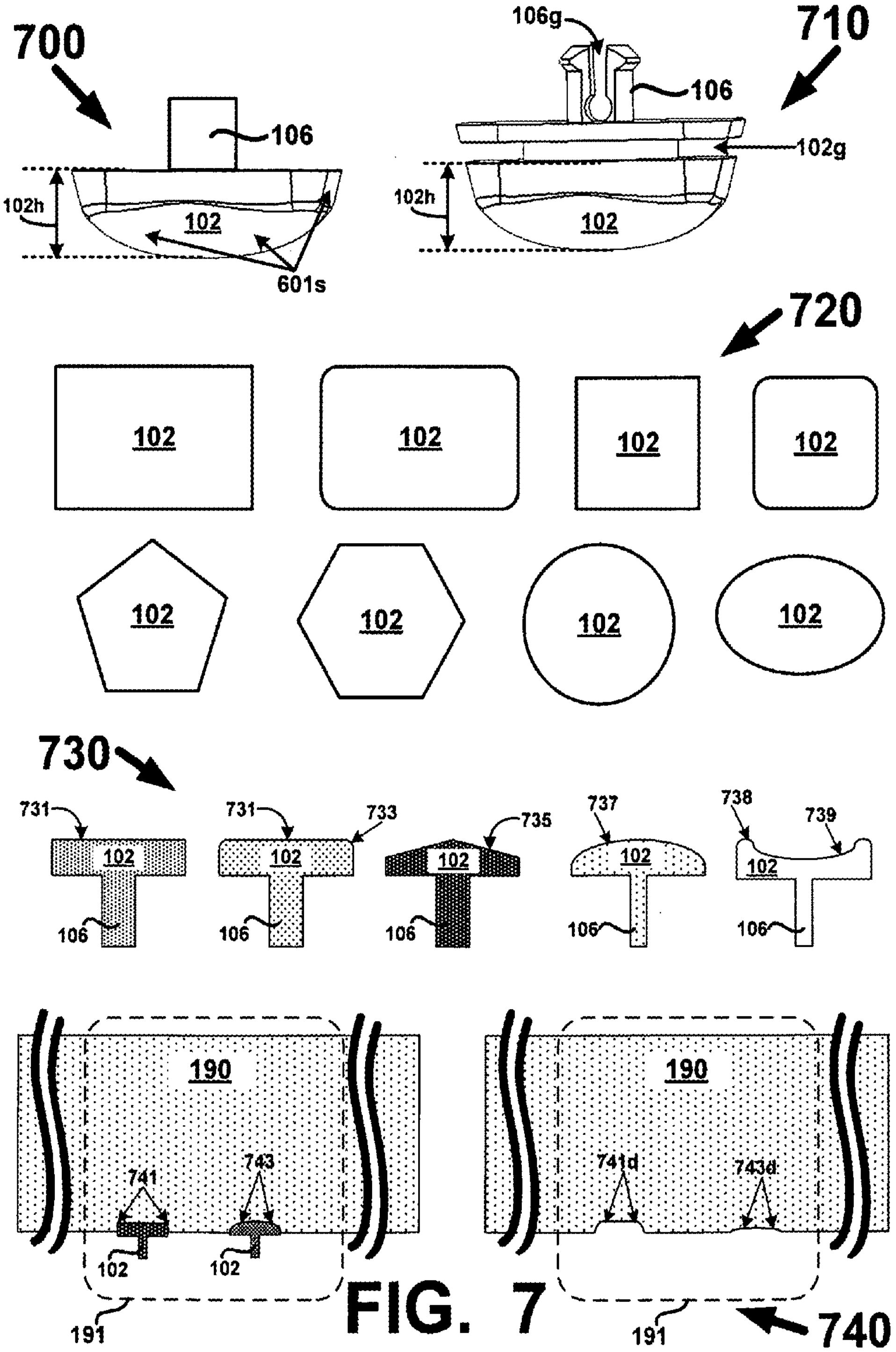
700
106
102h
102
601s
710
106g
106
102g
102h
102
720
102
102
102
102
102
102
102
102
730
731
102
106
731
733
102
106
735
102
106
737
102
106
738
739
102
106
190
741
743
102
102
191
190
741d
743d
191
740

FIG. 7

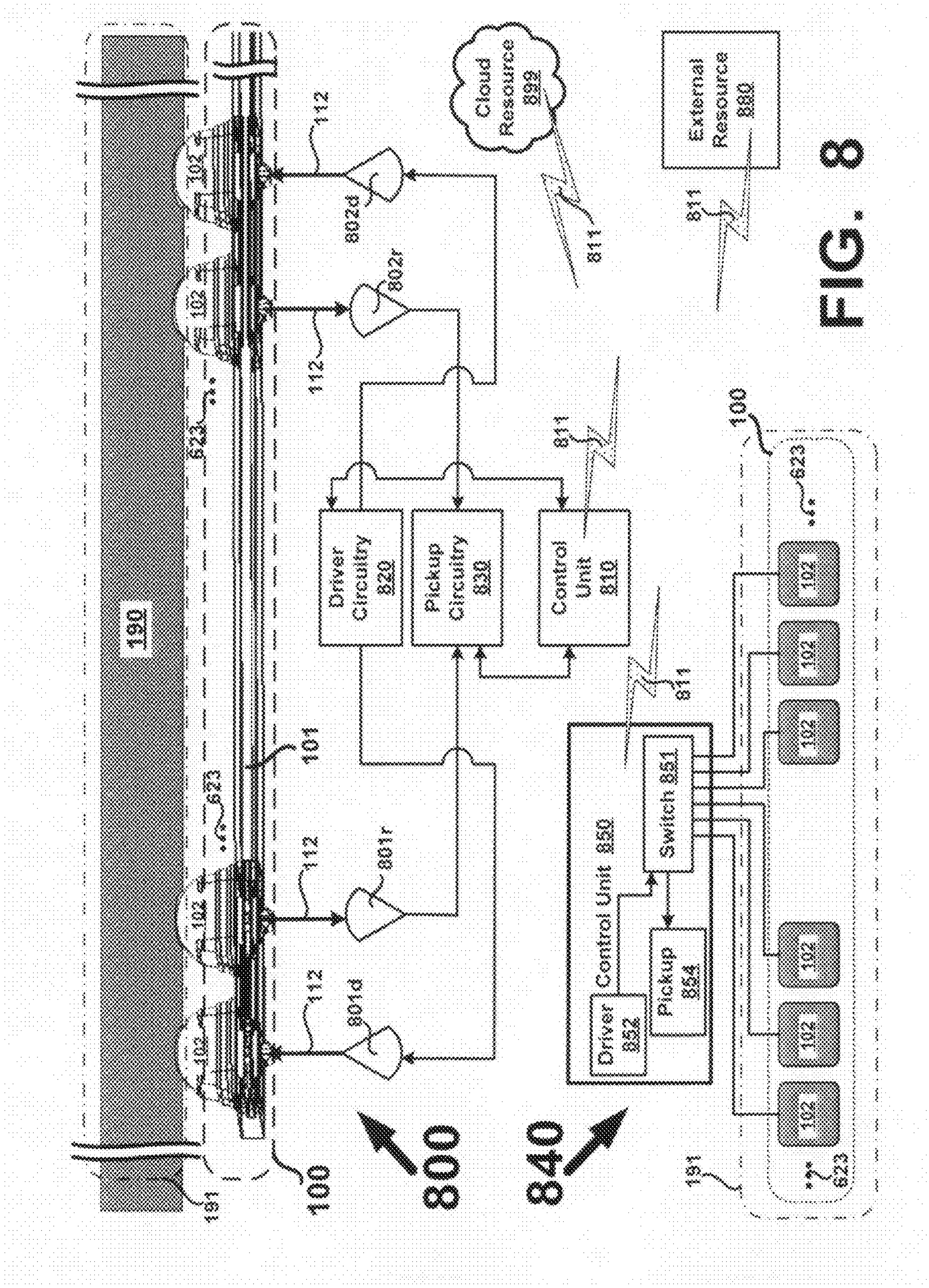
190
191
100
101
102
112
623
801d
801r
802r
802d
800
840
Driver Circuitry 820
Pickup Circuitry 830
Control Unit 810
811
Cloud Resource 899
External Resource 880
Control Unit 850
Driver 852
Pickup 854
Switch 851

FIG. 8

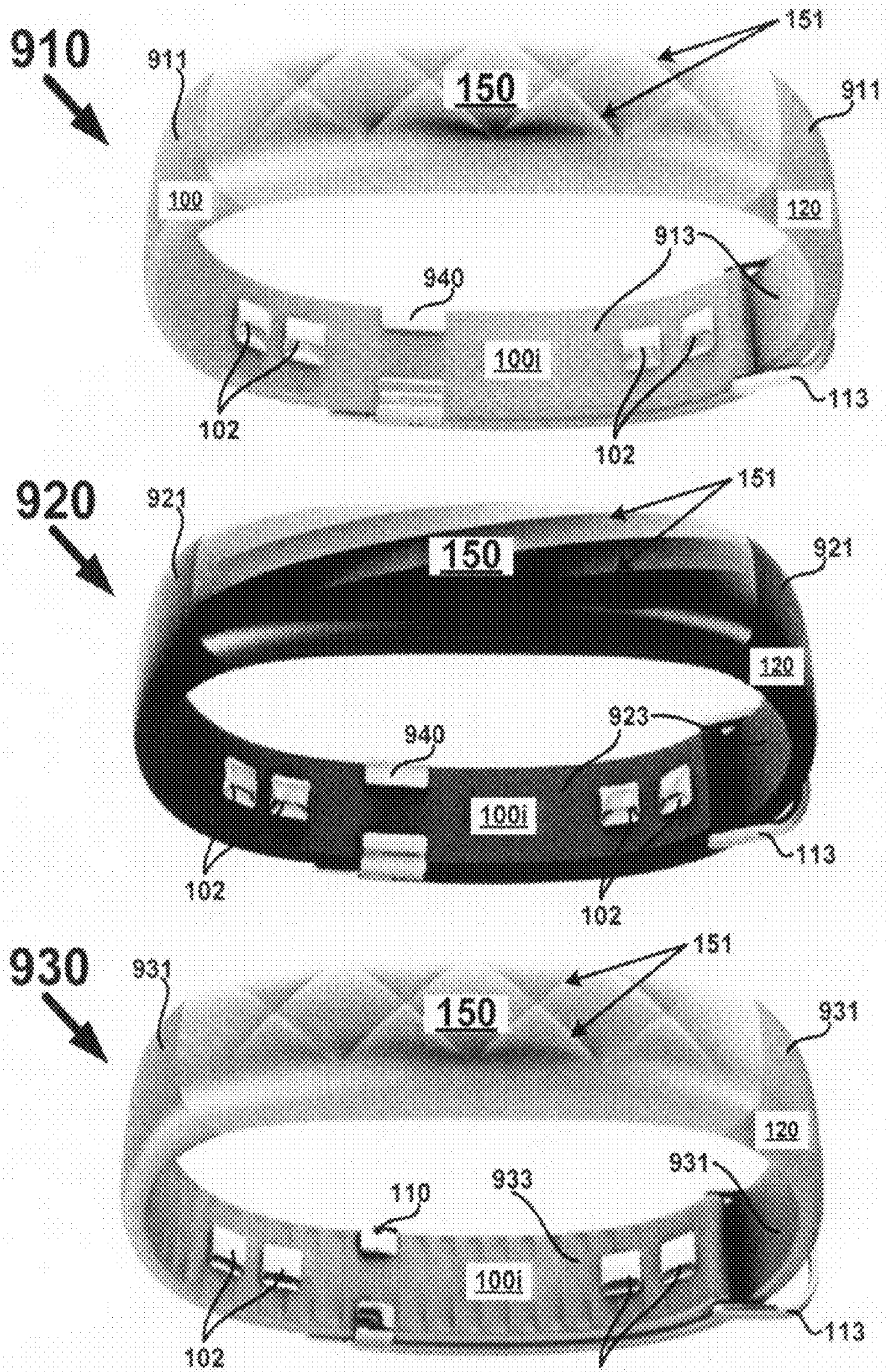
910
911
151
150
911
100
120
913
940
100i
102
113
102
920
921
151
150
921
120
923
940
100i
102
113
102
930
931
151
150
931
120
931
110
933
100i
102
113
102

FIG. 9

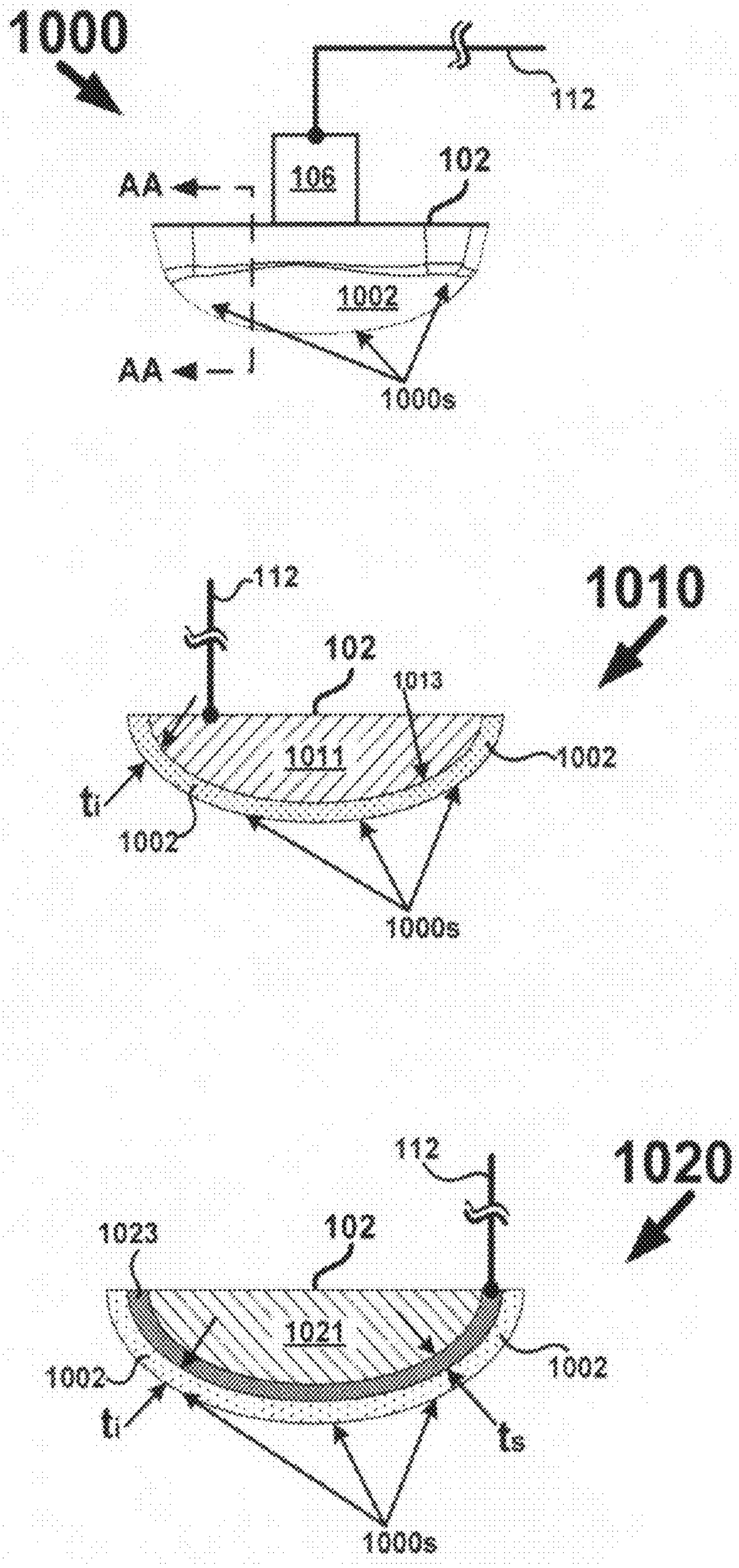
1000
112
106
102
AA
AA
1002
1000s
112
1010
102
1013
1011
1002
$t_i$
1002
1000s
112
1020
1023
102
1021
1002
1002
$t_i$
$t_s$
1000s

FIG. 10

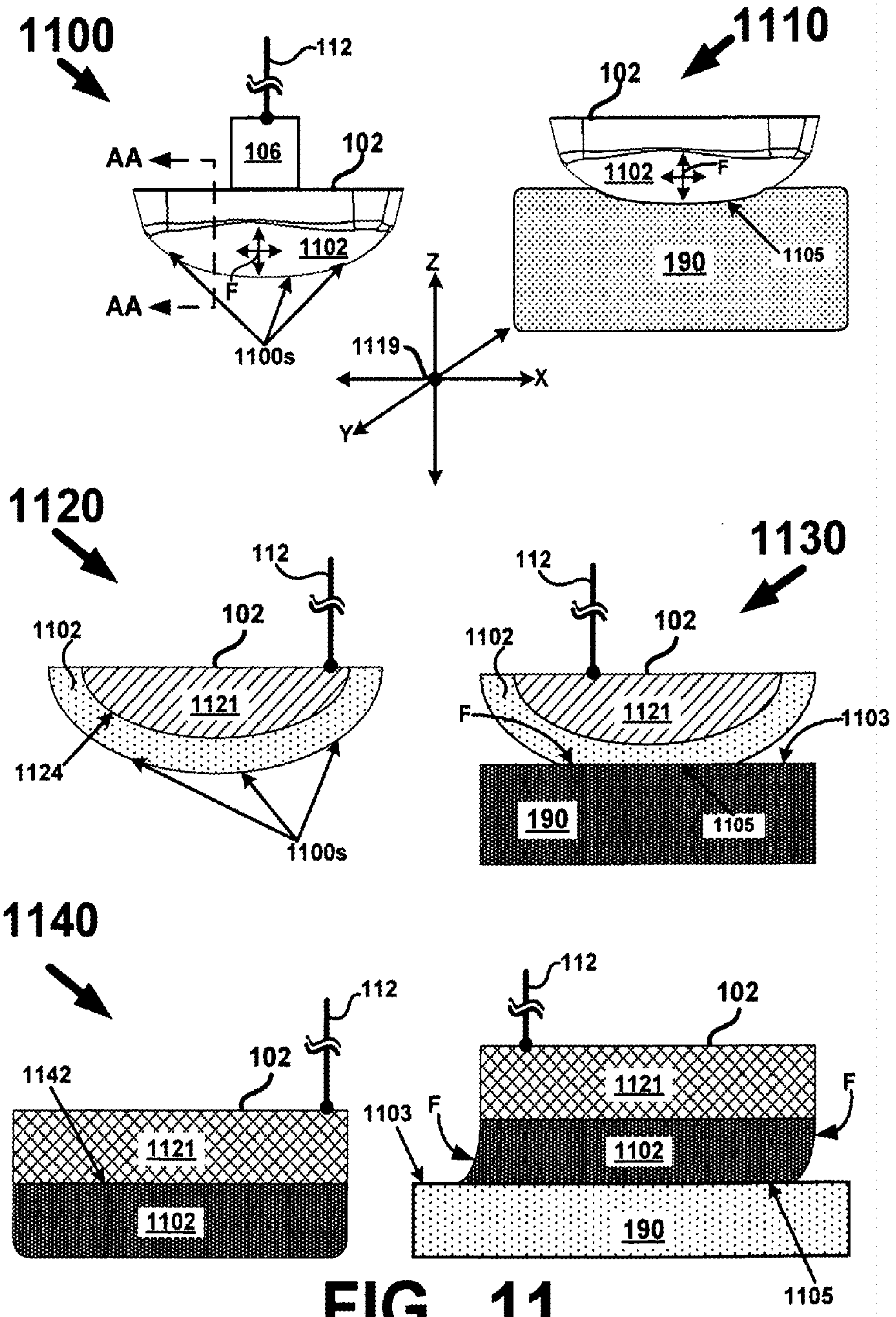
1100
112
106
102
AA
1102
F
AA
1100s
1110
102
1102
F
190
1105
Z
1119
X
Y
1120
112
102
1102
1121
1124
1100s
1130
112
102
1102
1121
F
1103
190
1105
1140
112
102
1142
1121
1102
112
102
1121
F
1103
F
1102
190
1105

FIG. 11

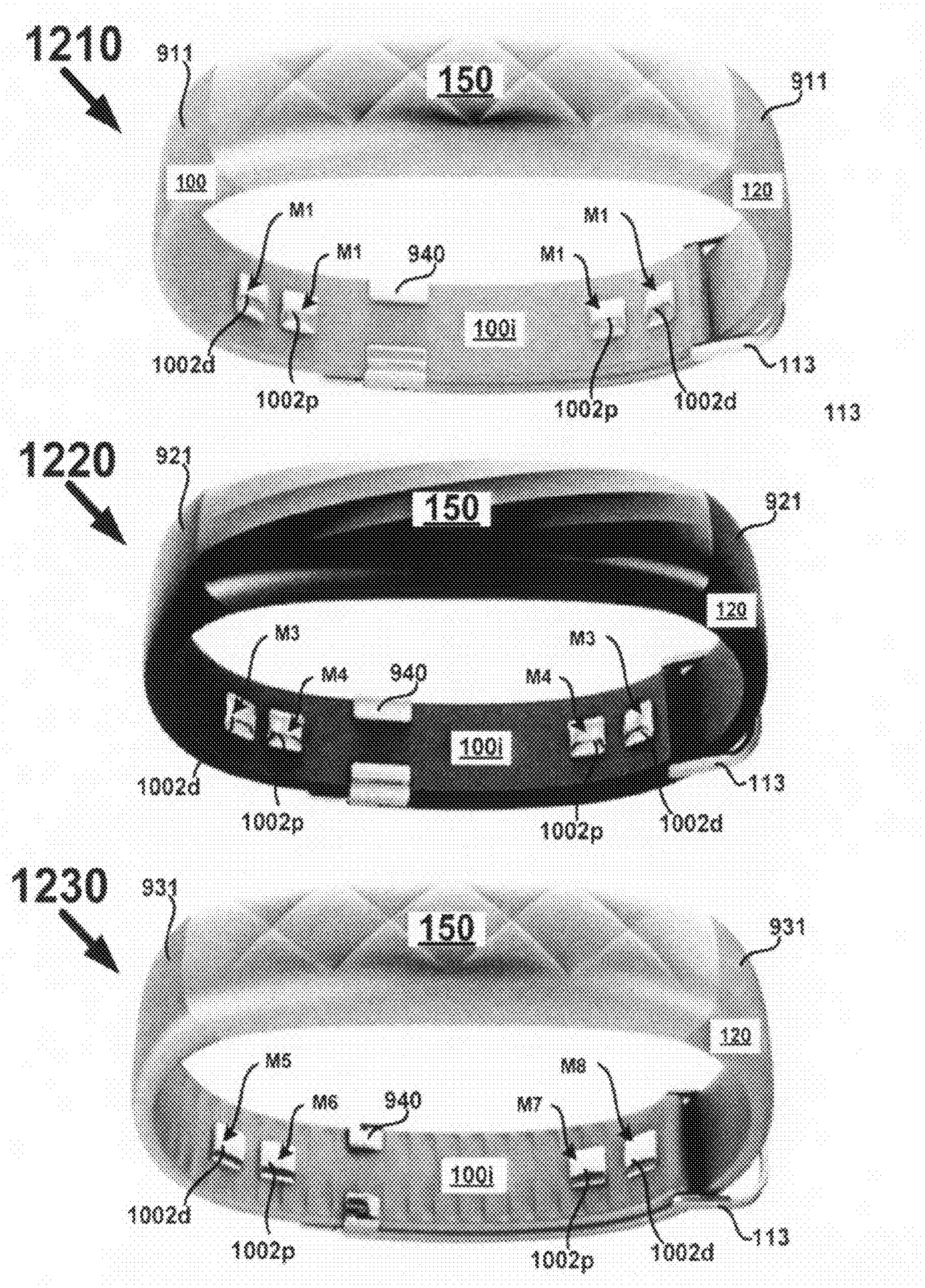
1210
911
150
911
100
120
M1
M1
940
M1
M1
100i
1002d
1002p
1002p
1002d
113
113
1220
921
150
921
120
M3
M4
940
M4
M3
100i
1002d
1002p
1002p
1002d
113
1230
931
150
931
120
M5
M6
940
M7
M8
100i
1002d
1002p
1002p
1002d
113

FIG. 12

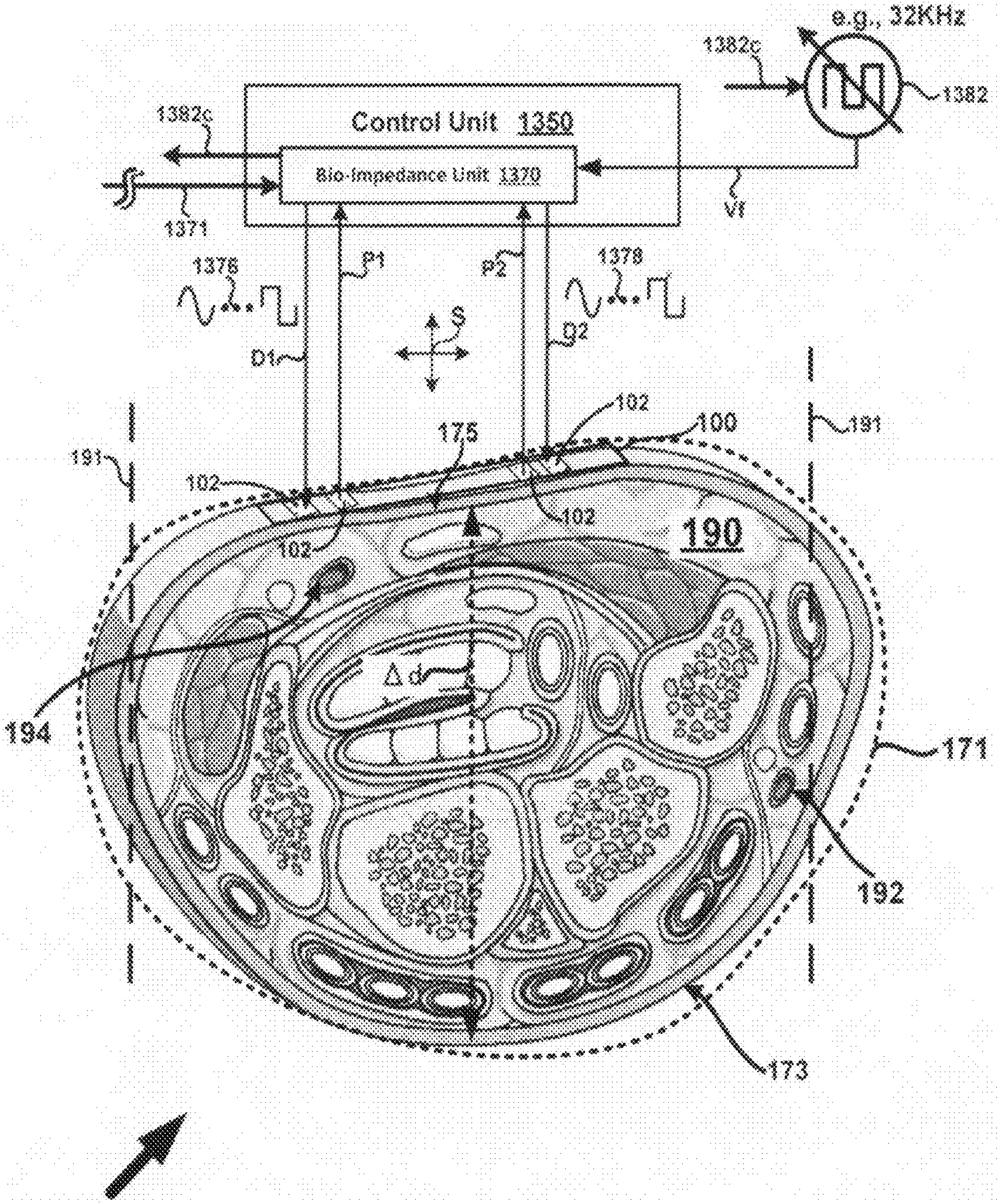
e.g., 32KHz
1382c
1382
Control Unit 1350
1382c
Bio-Impedance Unit 1370
1371
Vf
1376
P1
P2
1378
S
D1
D2
102
100
191
175
191
102
102
102
190
Δd
194
171
192
173
1300

FIG. 13

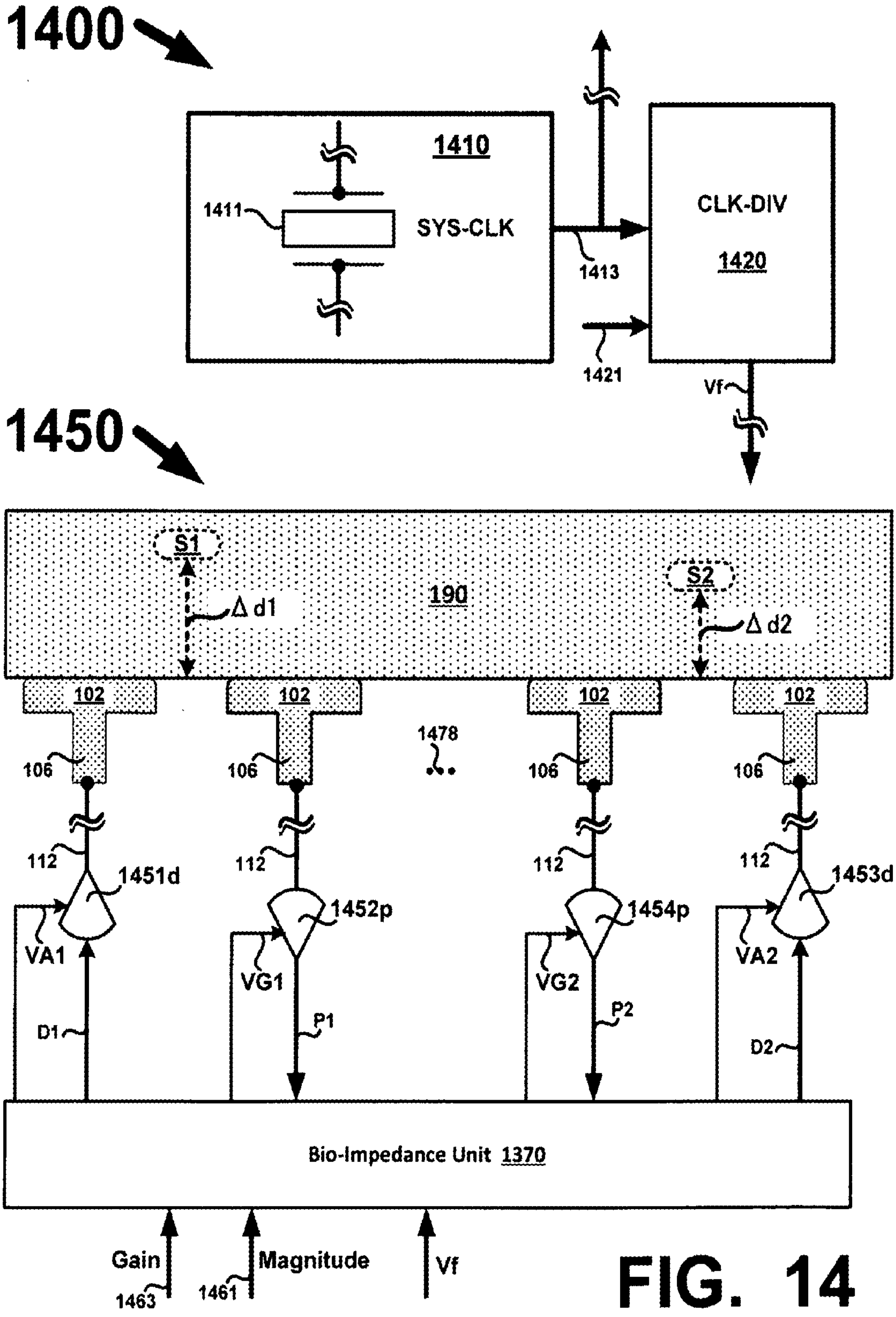
1400
1410
1411
SYS-CLK
1413
CLK-DIV
1420
1421
Vf
1450
S1
Δ d1
190
S2
Δ d2
102
102
102
102
1478
106
106
106
106
112
112
112
112
1451d
1452p
1454p
1453d
VA1
VG1
VG2
VA2
D1
P1
P2
D2
Bio-Impedance Unit 1370
Gain
1463
Magnitude
1461
Vf

FIG. 14

# STRAP BAND FOR A WEARABLE DEVICE

## CROSS-REFERENCE TO RELATED APPLICATIONS

**[0001]** This application is a continuation-in-part of U.S. patent application Ser. No. 14/480,048, filed on Sep. 8, 2014, having Attorney Docket No. ALI-474, and titled “STRAP BAND FOR A WEARABLE DEVICE”, which is incorporated by reference herein in its entirety for all purposes.

## FIELD

**[0002]** Embodiments of the present application relate generally to hardware, software, wired and wireless communications, RF systems, wireless devices, wearable devices, electrode structures, biometric devices, health devices, fitness devices, and consumer electronic (CE) devices.

## BACKGROUND

**[0003]** Devices that may be used to detect and track motion, diet, sleep patterns, biometric data, fitness, and other activities of a user, must often be positioned on a user’s body to sense signals or other data generated by the users body and/or motion of the user. In some applications, the device is worn on one of the bodies’ extremities, such as the arm or wrist for example. Due to differences in size, shape and anatomy in a user base, some devices may require different sizes to accommodate those differences. For example, a wearable device may require small, medium and large sizes, or even an extra-large size to accommodate differences in user’s bodies. Biometric and/or other types of sensors that may be included in the device may require consistent positioning and/or contact with portions of a user’s body, such as the skin, for example. A band or strap used to connect the device with a user’s body may be too stiff, uncomfortable to wear, or not easily adjusted to match the user’s body. In some examples, data generated by sensors may be unreliable due to the device being too tightly coupled with the user’s body. In other examples, when a device is too tight, it may cause sweating and moisture from that sweating may result in unreliable sensor data, as in the case when sensors are used for measuring skin conductivity (e.g., galvanic skin response). Tight coupling of the device to the user’s body may also cause sensors that come into contact with the body to leave an imprint after the device has been removed. Finally, some devices may not be configured to collect biometric data when the user is in motion (e.g., during exercise) due to sensor movement relative to the user’s body.

**[0004]** Accordingly, there is a need for apparatus and systems for devices that are adjustable to accommodate a wide range of anatomies in a single device size, are comfortable to wear, and accurately collect sensor data.

## BRIEF DESCRIPTION OF THE DRAWINGS

**[0005]** Various embodiments or examples (“examples”) are disclosed in the following detailed description and the accompanying drawings:

**[0006]** FIG. **1** depicts examples of a strap band positioned on a body portion;

**[0007]** FIG. **2** depicts a side view of a strap band coupled with a device;

**[0008]** FIG. **3** depicts a top plan view and a side view of a strap band;

**[0009]** FIG. **4** depicts profile views of a system including a strap band;

**[0010]** FIG. **5** depicts views of a strap band and relative dimensions and positions of components of the strap band;

**[0011]** FIG. **6** depicts a side view and top plan view of a wire bus;

**[0012]** FIG. **7** depicts various examples of electrodes;

**[0013]** FIG. **8** depicts examples of circuitry coupled with electrodes of a strap band;

**[0014]** FIG. **9** depicts profile views of a systems that include a strap band;

**[0015]** FIG. **10** depicts examples of an ion exchange layer;

**[0016]** FIG. **11** depicts examples of a flexible ion exchange layer;

**[0017]** FIG. **12** depicts examples of materials for ion exchange layers of electrodes on a wearable device;

**[0018]** FIG. **13** depicts an example of a bio-impedance unit coupled with a variable frequency signal; and

**[0019]** FIG. **14** depicts an example of a block diagram of a frequency for a variable frequency signal that is derived from a system clock and an example of a schematic for a bio-impedance unit.

**[0020]** Although the above-described drawings depict various examples of the invention, the invention is not limited by the depicted examples. It is to be understood that, in the drawings, like reference numerals designate like structural elements. Also, it is understood that the drawings are not necessarily to scale.

## DETAILED DESCRIPTION

**[0021]** Various embodiments or examples may be implemented in numerous ways, including but not limited to implementation as a device, a wireless device, a system, a process, a method, an apparatus, a user interface, or a series of executable program instructions included on a non-transitory computer readable medium. Such as a non-transitory computer readable medium or a computer network where the program instructions are sent over optical, electronic, or wireless communication links and stored or otherwise fixed in a non-transitory computer readable medium. In general, operations of disclosed processes may be performed in an arbitrary order, unless otherwise provided in the claims.

**[0022]** A detailed description of one or more examples is provided below along with accompanying figures. The detailed description is provided in connection with such examples, but is not limited to any particular example. The scope is limited only by the claims and numerous alternatives, modifications, and equivalents are encompassed. Numerous specific details are set forth in the following description in order to provide a thorough understanding. These details are provided for the purpose of example and the described techniques may be practiced according to the claims without some or all of these specific details. For clarity, technical material that is known in the technical fields related to the examples has not been described in detail to avoid unnecessarily obscuring the description.

**[0023]** Reference is now made to FIG. **1** where examples **140** and **160** of a strap band **100** positioned on a body portion **190** are depicted. Here, for purposes of explanation, a non-limiting example of a body portion is a wrist; however, the present application is not limited to a wrist and strap band **100** may be used with other body portions, including but not limited to the torso, the neck, the head, the arm, the leg, and the ankle, for example.

**[0024]** In example **140**, electrodes **102** of strap band **100** may be configured to sense signals, such as biometric signals, from structures of body portion **190** positioned in a target region **191**. As one non-limiting example, the structure of interest may include the radial artery **192** and the ulnar artery **194**. The radial artery **192** is the largest artery that traverses the front of the wrist and is positioned closest to thumb **195**. Ulnar artery **194** runs along the ulnar nerve (not shown) and is positioned closest to the pinky finger **193**. The radial **192** and ulnar arteries arch together in the palm of the hand and supply the fingers **193**, thumb **195** and front of the hand with blood. A heart pulse rate may be detected by blood flow through the radial **192** and ulnar arteries, and particularly from the radial artery **192**. Accordingly, strap band **100** and electrodes **102** may be positioned within the target region **191** to detect biometric signals associated with the body, such as heart rate, respiration rate, activity in the sympathetic nervous system (SNS) or other biometric data, for example.

**[0025]** Target region **191** is depicted as being wider than the wrist **190** and spanning a depth along the wrist **190** to illustrate that variations in body anatomy among a population of users will result in differences in wrist sizes and some user's may position the strap band **100** closer to the hand; whereas, other user's may position the strap band **100** further back from the hand. Now the view in example **140** is a ventral view of the hand **190**; however, the wrist **190** has a circumference C that may vary ΔC among users. Arrows **194** indicate a width of the wrist **190** for the example **140**; however, in a population of users, circumference (see **171** of example **160**) of a wrist may vary from a minimum Min (e.g., a very small wrist) to a maximum Max (e.g., a very large wrist). To accommodate variations in wrist circumference ΔC from Min to Max, dimensions of strap band **100**, dimensions of electrodes **102** and positions of the electrodes **102** relative to each other and relative to other structures the strap band **100** may be coupled with, may be selected to position the electrodes **102** within the target region **190** for wrist sizes spanning a minimum wrist size of about 135 mm in circumference to a maximum wrist size of about 180 mm in circumference, for example. In other examples, the dimensions and positions may be selected to position the electrodes **102** within the target region **190** for wrist sizes spanning a minimum wrist size of about 130 mm in circumference to a maximum wrist size of about 200 mm in circumference. For example, within the target region **190**, electrodes of strap band **100** may be positioned to sense signals from the radial **192** and ulnar **194** arteries for wrist circumferences within the aforementioned 130 mm to 200 mm range, even when the strap band **100** overlays a flat or curved surface of the wrist **190** or is displaced to the left, the right, up, or down as denoted by arrow for Son wrist **190** due to variations in where user's like to place their strap bands on their wrist **190**. Therefore, the strap band **100** may not require an exact centered location on writs **190** in order for electrodes **102** to sense signals from structure in the target region **191** (e.g., **192** and **194**).

**[0026]** Some of the electrodes **102** may have signals applied to them (e.g., are driven) and are denoted as D; whereas, other electrodes **102** may pick up signals (e.g., receive signals) and are denoted as P. Positioning and sizing of the electrodes **102** that are adjacent to each other (e.g., a driven D electrode next to a pick-up P electrode) may be selected to prevent those electrodes from contacting each other when the strap band **100** is bent or otherwise curved when donned by the user. For example, if electrodes **102** lie on an approximately flat portion of wrist **190**, then adjacent electrodes **102** (e.g., a D and P) may not be significantly urged inward toward each other because they are lying on an approximately planar surface. On the other hand, if electrodes **102** lie on a curved portion of wrist **190**, then adjacent electrodes **102** (e.g., a D and P) may be urged inward toward each other, and if the adjacent electrodes are spaced to close to each other, then their inward deflection might bring them into contact with each other (e.g., they become electrically coupled) and the signal being received by the pick-up P electrode will be the signal being driven on the drive D electrode and not the signal from structure in target region **191**.

**[0027]** Example **160** depicts a cross-sectional view of wrist **190** along a dashed line AA-AA. A circumference of the wrist **190** is denoted as **171** and will vary based on wrist size. As depicted, strap band **100** is positioned on a ventral portion of wrist **190** in a region **175** that is relatively flat; however, in the target region **191**, moving left or right away from **175** towards the boundary of the target region **191**, the surface of wrist **190** becomes curved. Moreover, wrist **190** has curvature in a region **173** of a dorsal portion of the wrist **190**. Although many users will likely wear a device that includes the strap band **100** in a prescribed manner in which the electrodes **102** of the strap band **100** are placed against the bottom of the wrist **190** (e.g., the ventral portion), some users may prefer to place the strap band **100** and its electrodes **102** on the dorsal portion **173** where the surface of wrist **190** includes curvature. In either case, strap band dimensions and electrode dimensions and placement may be selected to establish sufficient contact of the electrodes **102** with skin of the wrist **190** within the target region **191** so that signals driven onto drive D electrodes are coupled with wrist **190** and signals from wrist **190** are received by pick-up electrodes P.

**[0028]** Moving now to FIG. **2** where a side view of a strap band **100** coupled with a device **150** is depicted. Here, device **150**, a band **120**, and strap band **100** may form a system **200**. Device **150** may include circuitry, one or more processors (e.g., DSP, μP, μC), memory (e.g., non-volatile memory), data storage (e.g., for algorithms configured to execute on the one or more processors), one or more sensors (e.g., temperature, motion, biometric, ambient light), one or more radios (e.g., Bluetooth—BT, WiFi, near field communications—NFC), circuit boards, a power source, a display (e.g., LED, OLED, LCD), transducers (e.g., a loudspeaker, a microphone, a vibration engine), one or more antennas, a communications interface (e.g., USB), a capacitive touch interface, etc. for example. Device **150** may include an arcuate inner surface **150***i* having a curvature selected to prevent or minimize rotation of system **200** around wrist **190** (or other body portion) when system **200** is donned by a user. Preventing or minimizing rotation of system **200** may be operative to maintain position of electrodes **102** within the target region **191** and/or maintain contact between the electrodes **102** and skin within the target region **191**. Device **150** may include ornamentation **151** (e.g., for esthetic purposes) on an upper surface **153**.

**[0029]** Band **120** may be a mechanical band, that is, a band configured to couple with strap band **100** for donning system **200** on a body portion of a user, such as the wrist **190** of FIG. **1**. Band **100** may be purely passive (e.g., no electronics disposed in it) or may be active (e.g., includes circuitry and/or passive and/or active electronic components). Band **120** may include a latch **121** configured to mechanically couple with a buckle **110** disposed on strap band **100**. Latch **121** and a portion of band **120** may be inserted through a loop **113** disposed on strap band **100**. Band **120** may include an inner surface **120***i* and an outer surface **120***o*. When band **120** is inserted into loop **113** and buckle **110** a portion of inner surface **120***i* may contact a portion of an outer surface **100***o* of strap band **100**.

**[0030]** Strap band **100** may include a plurality of electrode **102** positioned on and extending outward of an inner surface **100***i*. Electrodes **102** and a portion of inner surface **100***i* may be positioned in contact with skin in target region **191** (e.g., skin on wrist **190**) when the system **200** is donned by a user. In addition to electrodes **102**, strap band **100** may house other components, such as wires for coupling electrodes **102** with circuitry, antenna, a power source, circuitry, integrated circuits (IC's), passive electronic components, active electronic components, etc., for example.

**[0031]** Strap band **100** and band **120** may couple with device **150** at attachment points denoted as **115** and **125** respectively. For purposes of explanation, attachment points **115** and **125** may be used as non-limiting examples of reference points for dimensions described herein. Further, dashed line **114** on strap band **100** and dashed line **124** on band **120** may be used as non-limiting examples of reference points for dimensions described herein.

**[0032]** Turning now to FIG. **3** where a top plan view **310** and a side view **320** of a strap band **100** are depicted. In view **310** (e.g., looking down on inner surface **100***i*), dashed line **115** may serve as a reference point for dimensions A-E. Strap band **100** may include wires **112** that exit strap band **100** proximate its connection point with another structure, such as device **150** of FIG. **2**, for example. Wires **112** may be coupled with electrodes **102** and may be coupled with circuitry (e.g., circuitry in device **150**). An overall length of strap band **100** as measured from line **115** to line **114** may be dimension A. Dimension B may be a distance from line **115** to an edge of electrode **102**. Dimension C may be a distance from line **114** to an edge of electrode **102**. Dimension D may be a distance between inner facing edges of the two innermost electrodes **102**. Dimension D' may be a distance between centers of the two innermost electrodes **102**, with distance D' being greater than the distance D (i.e., D'>D). Dimension E may be a distance between edges of adjacent electrodes **102**.

**[0033]** Dimensions A-E are presented in side view in view **320**. In side view **320**, strap band **100** may include an arcuate portion as denoted by arrows for **303**. Strap band **100** may be flexible along its length (e.g., from **115** to **114**). Although some dimensions other than D' are measured from edge-to-edge (e.g., dimension E between edges of adjacent electrodes **102**), center-to-center dimensions may also be used and the present application is not limited to edge-to-edge or center-to-center dimensions for measurements described herein. Side view **320** depicts electrodes **102** extending outward of inner surface **100***i* of strap band **100**.

**[0034]** FIG. **4** depicts profile views **400** and **450** of a system **200** including strap band **100**. Views **400** and **450** depict the system **200** in a configuration the system would have if donned on a user (e.g., system **200** attached to wrist **190** of FIG. **1**). In view **400**, device **150** is coupled with band **120** and strap band **100** with band **120** inserted through loop **113** and latch **121** coupled with buckle **110**. Electrodes **102** are depicted positioned along inner surface **100***i* and having dimensions X and Y. Buckle **110** includes a gap having a width dimension W that is greater than the Y dimension of electrodes **102** (e.g., W>Y), so that sliding **110***s* buckle **110** along the strap band **100** in the direction of arrows for **110***s* will allow the buckle **110** to slide past the electrodes **102** without making contact with and without establishing electrical continuity with the electrodes **102**.

**[0035]** Moving to view **450** where the aforementioned dimensions A-E are depicted along with dimensions for other components of system **200**, namely, dimension G for device **150** and dimension H for band **120**. Dimensions A-E, X, Y, W and G-H may be selected to form a system **200** that when donned by a user having a body portion circumference (e.g., a circumference of a wrist) in a range from about 130 mm to about 200 mm, will position the electrodes **102** within the target region **191** with sufficient contact force with skin in the target region to obtain a high signal-to-noise-ratio for circuitry that receives signals from pick-up electrodes P (e.g., the two innermost electrodes **102**) in response from signals driven onto drive electrodes **102** (e.g., the two outermost electrodes **102**). Although a range from about 135 mm to about 180 mm may be a typical range of wrist sizes found in a population of users, the larger range of from about 130 mm to about 200 mm may represent outlier ranges that are not typical but nevertheless may occasionally be encountered in a population of users. For example, a very skinny wrist of about 130 mm or a very large wrist of about 200 mm may be corner case exceptions to the more typical range beginning at about 135 mm and ending at about 180 mm of circumference.

**[0036]** Reference is now made to FIG. **5** where views of strap band **100** and relative dimensions and positions of components of strap band **100** are depicted. In view **500**, a system **200** may include the following example dimensions in millimeters (mm) with an example dimensional tolerance of +/−0.2 mm or less (e.g., +/−0.1 mm): dimension H for band **120** may be 80.0 mm (e.g., from **124** to **125** in FIG. **2**); dimension G for device **150** may be 45.0 mm (e.g., from **125** to **115** in FIG. **2**); dimension A for strap band **100** may be 95.0 mm (e.g., from **115** to **114** in FIG. **2**); dimension B from **115** to an edge of outermost electrode **102** may be 32.0 mm; dimension E from an edge of outermost electrode **102** to an edge of adjacent innermost electrode **102** may be 4.0 mm; dimension D from an edge of innermost electrode **102** to an edge of the other innermost electrode **102** may be 31.5 mm edge-to-edge or dimension D' for innermost electrodes **102** may be 36.0 mm center-to-center; distance E from an edge of innermost electrode **102** to the other outermost electrode **102** may be 4.0 mm; distance C from an edge of the outermost electrode **102** to **114** may be 5.5 mm; and a distance S of band **120**, strap band **100** or both may be 10 mm-11 mm (e.g., a width of the band **120** and/or strap band **100**). As one example, distance D may be approximately one-third (⅓) the dimension A for strap band **100**, such that if A=95.0 mm, then D may be approximately 31.6 mm, with a tolerance of +/−0.2 mm or less (e.g., +/−0.1 mm).

**[0037]** In view **520**, example dimensions for electrodes **102** may include a X dimension of 4.5 mm and a Y dimension of 4.5 mm. Electrodes **102** may have a height Z above inner surface **100***i* of strap band **100** of 1.5 mm. Dimensional tolerances for dimensions X, Y, and Z may be +/−0.2 mm or less (e.g., +/−0.1 mm). In view **520** dimension W of buckle **110** may be selected to be greater than dimension Y of electrode **102** to provide clearance between opposing edges of electrode **102** and buckle **110** so that as buckle **110** slides **110***s* along strap band **100**, the buckle **110** does not make contact with electrodes **102** (e.g., the opposing edges). Dimension W may be selected to be about 0.3 mm to about 0.6 mm greater than dimension Y of electrodes **102**. For example, if dimension Y is 4.5 mm, then dimension W may be 5.0 mm. Buckle

**110** may include guides **110***g* configured to engage with features **110***p* on inner surface **100***i* of strap band **100** (see view **540**). For example, prior to attaching loop **113** to strap band **100**, strap band **100** may be inserted through an opening **110***o* of buckle **110** and guides **110***g* may engage features **110***p* to allow indexing (e.g., a mechanical stop) of the buckle **110** as it slides **110***s* along the strap band **100**. The indexing may allow a user of the system **200** to adjust the fit of the system **200** to their individual wrist size (e.g., by sliding **110***s* the buckle **110** along strap band **100**), while also providing tactile feedback caused by guides **110***g* engaging features **110***p* as the buckle slides **110***s* along the strap band **100**. Guides **110***g* may also be operative to fix the position of the buckle **110** on the strap band **100** after the user adjustment has been made so that the buckle **110** does not move (e.g., buckle **100** remains stationary unless moved by the user).

**[0038]** Dimensions X, Y, and Z of electrodes **102** may be selected to determine a surface area of the electrodes **102** (e.g., for surfaces of electrodes **102** that are urged into contact with skin in target region **191**). For example, surface area for electrodes **102** may be in a range from about 10 $mm^2$ to about 20 $mm^2$. In some examples, structure connected with the electrodes **102** may cover some portion of the surface of the electrodes **102** and/or sidewall surfaces of the electrodes **102** and reduce their actual surface area (e.g., skirts **104** that surround the electrodes **102**, material of strap band **100**). For example, with dimensions X and Y being 4.5 mm such that electrodes **102** have an actual surface area of 20.25 $mm^2$, an effective surface area of the electrodes **102** that may be exposed above inner surface **100***i* for contact with skin may be 18 $mm^2$.

**[0039]** In view **540**, structure on inner surface **100***i* of strap band **100** is depicted in greater detail than in view **500**. For example, proximate **115** a portion of dimension B may be arcuate and dimension B may include dimensions B**1** and B**2**, where dimension B**1** may be the curved portion of B. The Y dimension for only one of the electrodes **102** is depicted; however, for purposes of explanation it may be assumed that the Y dimensions of the other electrodes **102** are identical. In view **540**, strap band **100** may have a width S of 10.0 mm and a thickness T of 2.0 mm measured between inner **1001** and outer **100***o* surfaces. Thickness T may be the thinnest section of strap band **100** and strap band **100** may be thicker along portions of dimension B**1**. Thickness T may be in a range from about 0.9 mm to about 3.2 mm, for example. The following are another example of dimensions in millimeters (mm) for strap band **100** with example dimensional tolerances of +/−0.2 mm or less (e.g., +/−0.1 mm): dimension B**1** may be 16.91 mm; dimension B**2** may be 15.02 mm; dimension X for electrodes **102** may be 4.46 mm; dimension Y for electrodes **102** may be 4.46 mm; dimension E between adjacent electrodes **102** may be 3.54 mm; may be 3.54 mm; dimension D (edge-to-edge) may be 32.54 mm or D' (center-to-center) may be 37.0 mm; and distance C may be 5.96 mm.

**[0040]** Attention is now directed to FIG. **6** where side view **600** and top plan view **610** of a wire bus **101***w* is depicted. Wire bus **101***w* may be a sub-assembly that is encapsulated (e.g., by injection molding) or otherwise incorporated into strap band **100**. Electrodes **102** may be mounted on wire bus **101***w* and wires **112** may be connected with electrodes **102** by a process such as soldering, welding, crimping, for example. Some of the dimensions as described above in regards to FIGS. **3**-**5** may be determined in part by dimensions and placement of electrodes **102** on wire bus **101***w*. As one example a length of wire bus **101***w* may be selected to span dimension A of strap band **100** so that electrodes **102** on wire bus **101***w* are positioned within the target range **191**. Similarly, dimensions B, E, X, Y, D, D', C, S, and T on strap band **100** may be determined in part by dimensions, positions and sizes of electrodes **102** on wire bus **101***w*. Wire bus **101***w* may be made from a material such as a thermoplastic elastomer (e.g., TPE or TPU). The material for wire bus **101***w* may be a flexible material. Wire bus **101***w* may have a thickness **101***t* in a range from about 0.3 mm to about 1.1 mm, for example. Skirt **104** may be made from a polycarbonate material, for example.

**[0041]** Electrodes **102** may include pins **106** used in mounting the electrodes **102** to wire bus **101***w*. A distance (e.g., a pitch) between centers of pins **106** may determine the spacing between electrodes **102** on strap band **100**. For example, spacing **106** may determine an edge-to-edge distance **102***s* between adjacent electrodes **102** and the distance **102***s* may determine distance E on strap band **100**. As another example, an edge-to-edge distance **102***i* or a center-to-center distance **102***j* between the innermost electrodes **102'** may determine distances D and D' respectively on strap band **100**. A height **102***h* from a surface **101***a* of wire bus **101***w* to a top of electrodes **102** may determine height Z (see view **520** of FIG. **5**) on strap band **100**, for example. Due to the material used to form the strap band **100** over the wire bus **101***w* the dimension for Z will typically be less than the dimension for **102***h*. For example, if Z is 1.5 mm, then **102***h* may be 1.7 mm. There may be more or fewer electrodes **102** on wire bus **101***w* as denoted by **623**. Skirts **104** may be coupled with electrodes **102** and may be operative as an interface between materials for the strap band **100** and electrodes **102** and may form a seal around the electrodes **102**. Skirts **104** and material used to form the strap band **100** around the wire bus **101***w* may reduce actual surface area of the electrodes to an effective surface area as described above.

**[0042]** FIG. **7** depicts various examples of electrodes **102**. In example **700**, electrode **102** may include an arcuate surface and a pin **106**. Height **102***h* may be measured from a top surface to a bottom surface of electrode **102**. In example **710**, electrode **102** may include a groove **102***g* and a pin **106** that includes a slot **106***g*. Height **102***h* may be measured from a top surface to a surface of groove **102***g*. Groove **102***g* may be surrounded by skirt **104** described above in reference to FIG. **6**.

**[0043]** In example **720**, different shaped for electrode **102** are depicted. Electrode **102** may have a shape including but not limited to a rectangular shape, a rectangle with rounded corners, a square shape, a square with rounded corners, a pentagon shape, a hexagon shape, a circular shape, and an oval shape, for example.

**[0044]** In example **730**, surfaces of electrode **102** may have surface profiles including but not limited to a planar surface **731**, a planar surface **731** with rounded edges **733**, a sloped surface **735**, an arcuate surface **737** (e.g., convex), and an arcuate surface **739** (e.g., concave). Arcuate surface **739** may include rounded edges **738**. Surface profiles of electrodes **102** may be configured to maximize surface area of the electrodes **102** that contact skin, to provide a comfortable interface between the electrode and the user's skin (e.g., for prolong periods of use, such as 24/7 use), to maximize electrical conductivity for improved signal to noise ratio (S/N), for example.

**[0045]** In example **740**, electrode **102** with a planar surface profile **741** and electrode **102** having an arcuate surface profile **743** are depicted engaged with skin of body portion **190** (e.g., a wrist). After the electrodes **102** are disengaged with the skin, each electrode **102** may leave an impression in the skin denoted as **741***d* and **743***d*. After a period of time has elapsed after the disengaging, the impression **743***d* from the electrode **102** having the arcuate surface profile **743** may be less pronounced and may fade away faster than the more pronounce impression **741***d* left by the electrode **102** with the planar surface profile **741**. Accordingly, some surface profiles for electrodes **102** may be more desirable for esthetic purposes (e.g., minimal impression after removal) and for comfort purposes (e.g., sharp edges may be uncomfortable).

**[0046]** Suitable materials for electrodes **102** include but are not limited to metal, metal alloys, stainless steel, titanium, silver, gold, platinum, and electrically conductive composite materials, for example. Electrodes **102** may be coated **601***s* with a material operative to improve signal capture, such as silver or silver chloride, for example. Electrodes **102** may be coated **601***s* with a material operative to prevent corrosion or other chemical reactions that may reduce electrical conductivity of the electrodes **102** are damage the material of the electrodes **102**. Examples of substances that may cause corrosion or other chemical reactions include but are not limited to body fluids such as sweat or tears, salt water, chlorine (e.g., from swimming pools), water, household cleaning fluids, etc.

**[0047]** Reference is now made to FIG. **8** where examples of circuitry coupled with electrodes **102** of a strap band **100** are depicted. In example **800**, electrodes **102** are depicted engaged into contact with skin of body portion **190** within target region **191**. Outermost electrodes **102** may be coupled (e.g., via wires **112**) with drivers **801***d* and **802***d* operative to apply a signal to the outermost electrodes **102** (e.g., driven D electrodes **102**). Innermost electrodes **102** may be coupled (e.g., via wires **112**) with receivers **801***r* and **802***r* operative to receive signals picked up by innermost electrodes **102** from electrical activity on the surface of and/or within body portion **190**. Drivers **801***d* and **802***d* may be coupled with driver circuitry **820** and receivers **801***r* and **802***r* may be coupled with pickup circuitry **830**. A control unit **810** may be coupled with driver circuitry **820** and with pickup circuitry **830**. Control unit **810** may include one or more processors, data storage, memory, and algorithms operative to control driver circuitry **820** and pickup circuitry **830** to process data received by pickup circuitry **830**, and to generate data used by driver circuitry **820** to output driver signals coupled with drivers **801***d* and **802***d*, for example. As one example, electrodes **102** may sense and/or generate signals associated with biometric functions of the body, such as bio-impedance (BI). Control unit **810** may perform signal processing of signals associated with driver circuitry **820** and/or pickup circuitry **830**, or an external resource **880** and/or cloud resource **899** in communication **811** (e.g., via a wired or wireless communication link) may perform some or all of the processing. For example, control unit **810** may transmit **811** data to **880** and/or **899** for processing. External resource **880** and/or cloud resource **899** may include or have access to compute engines, data storage, and algorithms that are used to perform the processing.

**[0048]** In example **840**, strap band **100** may include a plurality of electrodes **102** coupled with a switch **851** that is controlled by a control unit **850**. Control unit **850** may command switch **851** to couple one or more of the electrodes **102** with driver circuitry **852** such that electrodes **102** so coupled become driven electrodes D. Control unit **850** may command switch **851** to couple one or more of other electrodes **102** with pickup circuitry **854** such that electrodes **102** so coupled become pick-up electrodes P. There may be more or fewer of the electrodes **102** as denoted by **623**. Processing of signals and/or data may be handled by control unit **850** and/or by external resource **880** and/or cloud resource **899** using communications link **811** as described above. Algorithms and/or data used in the processing may be embodied in a non-transitory computer readable medium (e.g., non-volatile memory, disk drive, solid state drive, DRAM, ROM, SRAM, Flash memory, etc.) configured to execute on one or more processors, compute engines or other compute resources in control unit **810**, **850**, external resource **880** and cloud resource **899**. Electrodes **102** in example **840** may be used to cover additional surface area on body portion **190** as may be needed to accommodate differences in size of body portion **190** among a user population. External resource **880** may be a wireless client device, such as a smartphone, tablet, pad, PC or laptop and may execute an algorithm or application (APP) operative to determine which electrodes **102** to activate via switch **851** as driver D or pick-up P electrodes. A user may enter information about their wrist size or other body portion size as data used by the APP to make electrode **102** selections. Control unit **810** and/or **850** may be included in device **150** of FIG. **2**, for example.

**[0049]** FIG. **9** depicts profile views of systems **910**-**930** that include strap band **100**. System **910** may include device **150**, band **120**, and strap band **100**. Band **120** and strap band **100** may be made from a thermoplastic elastomer such as TPE, TPU, TPSV, or others, for example. The thermoplastic elastomer may be covered with an exterior fabric material **911**, such as cloth or nylon, for example. The electrode **102** and fastening hardware **113**, **121**, **940** may be anodized or coated with a surface finish such as a colored chrome finish, for example. In system **910**, buckle **110** may be replaced with a buckle **940** configured to slide **110***s* along the exterior fabric material **911** without damaging the fabric material **911**.

**[0050]** System **920** may include a faux leather exterior surface material **921** which may have a variety of finishes such as matte, flat, glossy, etc. The fastening hardware of system **920** may be coated with a surface finish as described above.

**[0051]** System **930** includes band **120** and strap band **100** that may be from a material **931**, such as a thermoplastic elastomer such as TPE, TPU, TPSV, or others, for example. Inner surface **100***i* of strap band **100** includes features operative to index buckle **110** as was described above in reference to FIG. **5**. Material **921** which may have a variety of finishes such as matte, flat, glossy, etc. The fastening hardware of system **930** may be coated with a surface finish as described above.

**[0052]** Device **150** may include top and bottom portions made from a material such as anodize aluminum that may be anodized in a variety of colors, for example. An upper surface may include ornamental elements **151**.

**[0053]** Moving on to FIG. **10** where examples **1000**, **1010** and **1020** of an ion exchange layer **1002** are depicted. In the examples of FIG. **10**, the electrode **102** may be a composite electrode formed by two or more layers of different materials that are in contact with each another. In example **1000**, electrode **102** may include an ion exchange layer **1002** formed (e.g., using a deposition process) on an electrically conductive substrate (e.g, a metal or a metal alloy) that will be described below. The ion exchange layer **1002** may be an uppermost surface **1000***s* of the electrode **102** that is positioned into contact with the body portion **190** as was described above in reference to FIGS. **1**, **7** and **9**, for example.

**[0054]** In example **1010**, a cross-sectional view of electrode **102** taken along dashed line AA-AA of example **1000** depicts the ion exchange layer **1002** positioned in contact with an electrically conductive substrate **1011**. Wire **112** may be coupled with the electrically conductive substrate **1011** (e.g., via pin **106** or other electrically conductive portion of electrode **102**, such as layer **1002**). The ion exchange layer **1002** may be made from an electrically conductive material and that material may be different than a material for the electrically conductive substrate **1011**. A process including but not limited to a vacuum deposition process, physical vapor deposition (PVD) process, chemical vapor deposition process (CVD), and a plating process, may be used to form the layer **1002** on substrate **1011**, for example. The ion exchange layer **1002** may include a thickness ti (e.g., as measured from an upper surface **1013** of substrate **1011**) in a range from about 0.2 microns to about 5.0 microns, for example. Thickness ti may be substantially uniform or may vary in thickness across substrate **1011** (e.g., relative to upper surface **1013**).

**[0055]** Substrate **1011** may be made from an electrically conductive material including but not limited to a metal, a metal alloy, a composite material, stainless steel (SS), a SS alloy, titanium (Ti), silver (Ag), gold (Au), platinum (Pt), copper (Cu), a noble metal, chromium (Cr), aluminum (Al), and alloys of those metals, just to name a few, for example.

**[0056]** The ion exchange layer **1002** may be made from an electrically conductive material configured to exchange ions with body portion **190** when the electrode **102** (e.g., surface **1000***s*) in contact with the body portion **190** and electron flow caused by a signal applied (e.g., via wire **112**) to the electrode generates electrons which exchange with ions at an electrode-skin interface created by the contact of electrode **102** with the body portion **190**.

**[0057]** Electrically conductive materials for the ion exchange layer **1002** include but are not limited to titanium carbide (TiC), titanium nitride (TiN), silver chloride (AgCl), and chromium nitride (CrN), for example. Example combinations of electrically conductive materials (e.g., different materials for layers **1002** and **1011**) for the ion exchange layer **1002** and the substrate **1011** include but are not limited to a titanium carbide (TIC) ion exchange layer **1002** on a stainless steel (SS) substrate **1011**, a titanium nitride (TiN) ion exchange layer **1002** on a stainless steel (SS) substrate **1011**, a titanium (Ti) ion exchange layer **1002** on a stainless steel (SS) substrate **1011**, and a chromium nitride (CrN) ion exchange layer **1002** on a stainless steel (SS) substrate **1011**, for example. The ion exchange layer **1002** may include a metal alloy composition of a metal and a salt (e.g., CI) or a metal and a nitride (e.g., N).

**[0058]** In example **1020**, electrode **102** may include an electrically non-conductive substrate **1021**, an inner layer **1023** of an electrically conductive material formed on the substrate **1021**, and the ion exchange layer **1002** formed on the inner layer **1023**. Ion exchange layer **1002** may include the thickness ti (e.g., as measured from an upper surface of inner layer **1023**) as was described above in reference to example **1010**. Inner layer **1023** may have a thickness ts (e.g., as measured from an upper surface of substrate **1021**) in a range from about 0.2 microns to about 10 microns, for example. Thickness ts may be substantially uniform or may vary in thickness across substrate **1021** (e.g., relative to the upper surface of **1021**). Wire **112** may be coupled with the inner layer **1023** (e.g., via pin **106** or other electrically conductive portion of electrode **102**, such as layer **1002**).

**[0059]** Substrate **1021** may be made from an electrically non-conductive material including but not limited to a glass, a plastic, a composite material, a fluorocarbon material (e.g., a polytetrafluoroethylene (PTFE) material), for example. As one example, substrate **1021** may be made from a thermoplastic polymer (e.g., an acrylonitrile butadiene styrene (ABS) plastic material).

**[0060]** Inner layer **1023** may be made from an electrically conductive material including but not limited to a metal, a metal alloy, a noble metal, and silver (Ag), for example. Ion exchange layer **1002** may be made from the materials described above in reference to example **1010**. As one example, electrode **102** may include the ion exchange layer **1002** made from silver chloride (AgCl), the inner layer **1023** of silver (Ag) and the substrate **1021** of ABS plastic. Inner layer **1023** and/or ion exchange layer **1002** may be formed using the processes described above for layer **1002** in example **1010**.

**[0061]** Referring now to FIG. **11** where examples of a flexible ion exchange layer **1102** are depicted. In example **1100**, the flexible ion exchange layer **1102** may be made from a material that flexes F or otherwise deforms and/or changes shape when positioned in contact with body portion **190** as depicted in example **1110**. Flexing F of the flexible ion exchange layer **1102** may be caused by relative motion between the flexible ion exchange layer **1102** and the body portion **190** along one or more axis **1119**. The relative motion may be caused by motion of a user (e.g., during exercise, running, walking, steps, sleep, etc.), stretching of skin (e.g., the epidermis) on a surface of the body portion **190**, pressure between the body portion **190** and the flexible ion exchange layer **1102** (e.g., when strap band **100** is donned on the body portion **190**), for example.

**[0062]** In example **1120** the flexible ion exchange layer **1102** may be formed on a substrate **1121** that is made from an electrically conductive material, such as those described above for substrate **1011** in example **1010** of FIG. **10**, for example. Flexible ion exchange layer **1102** may be made from a flexible material that is impregnated or otherwise infused with an electrically conductive material, such as a metal or metal alloy. The electrically conductive material may include but is not limited to silver (Ag), gold (Au), chlorine (Cl), titanium (Ti), aluminum (Al) and alloys of those materials. The flexible material may include but is not limited to a fabric (e.g., natural, synthetic, natural-synthetic blend), and foam, for example. The flexible ion exchange layer **1102** may be coupled with the substrate **1121** (e.g., on a surface **1124** of substrate **1121**) using a fastener, glue, an adhesive, stapling, welding, and soldering, for example. Wire **112** may be coupled with substrate **1121** or some other portion of electrode **102** (e.g., with flexible ion exchange layer **1102**).

**[0063]** In example **1130** the electrode **102** is depicted positioned in contact with body portion **190** with a portion of the flexible ion exchange layer **1102** flexed F along portions of an interface surface **1105** between the body portion **190** and the flexible ion exchange layer **1102**. Deformation of flexible ion exchange layer **1102** due to flexing F may vary as relative motion (e.g., along one or more axes of **1119**) varies and/or pressure between the body portion **190** and the flexible ion exchange layer **1102** varies.

**[0064]** In example **1140** the substrate **1121** and the flexible ion exchange layer **1102** are depicted having a different shape and having an interface surface **1142** that may be substantially planar. Engagement and/or motion between the body portion **190** (e.g., along an upper surface **1103**) and the flexible ion exchange layer **1102** may cause flexing F of the flexible ion exchange layer **1102**; however, contact between the body portion **190** and the flexible ion exchange layer **1102** is not broken due to the flexing F.

**[0065]** In the examples of FIGS. **10** and **11**, the flexible ion exchange layer **1102** may be operative to reduce motion artifacts caused by relative motion between the electrode **102** and the body portion **190** and/or caused by disruption of ion movement at an interface (e.g., **1105**) between an electrolyte (e.g., body sweat on surface of body portion **190**) and the electrode **102** when an electrical signal (e.g., a voltage or current) is being applied to the electrode by circuitry (e.g., see FIG. **8**). The electrode-electrolyte interface created when the ion exchange layer **1002** or flexible ion exchange layer **1102** are in contact with the body portion **190** creates an impedance that may vary due to motion artifacts (e.g., the relative motion). The ion exchange layer may lower the overall impedance so that signal degradation due to motion artifacts is reduced and signal to noise ratio (SNR) for circuitry coupled with electrodes **102** (e.g., instrumentation amplifiers) is increased. Sensing of electrical potentials (e.g. electric fields) in tissue and/or structures (e.g., blood vessels), at or below the surface **1103** of body portion **190** with as high a SNR as possible may be used to sense bio-impedance (BI), signals associated with the sympathetic nervous system (e.g., arousal), and galvanic skin response (GSR) (also referred to as galvanic skin resistance), for example.

**[0066]** Attention is now directed to FIG. **12** where examples of materials for ion exchange layers of electrodes on a wearable device are depicted. In example **1210**, strap band **100** may include driver electrodes and pickup electrodes having ion exchange layers denoted as **1002*d*** for driver electrodes and **1002*p*** for pickup electrodes, respectively. The ion exchange layers described above in reference to FIGS. **10** and **11** may be used for the ion exchange layers **1002*d*** and/or **1002*p***. In example **1210**, a material M1 for the ion exchange layers **1002*d*** and **1002*p*** is the same material. For example, material M1 may be silver-chloride (AgCl) for the ion exchange layers **1002*d*** and **1002*p***.

**[0067]** In example **1220**, a material M3 for the ion exchange layers **1002*d*** of the driver electrodes is a different material than a material M4 for the ion exchange layers **1002*p*** of the pickup electrodes. As one example, material M3 for ion exchange layers **1002*d*** of the driver electrodes may be titanium-nitride (TiN) formed on a stainless-steel (SS) substrate **1011**, and material M4 for the ion exchange layers **1002*p*** of the pickup electrodes may be silver-chloride (AgCl) formed on a silver (Ag) inner layer **1023** that is formed on a ABS plastic substrate **1021**.

**[0068]** In example **1230** different materials M5, M6, M7 and M8 may be used for the ion exchange layers (**1002*d*** and **1002*p***) of all of the electrodes **102**. For example, materials M5 and M8 for ion exchange layers **1002*d*** of the driver electrodes may be titanium-carbide (TiC) and titanium-nitride (TiN) respectively; whereas, materials M6 and M7 for ion exchange layers **1002*p*** of the pickup electrodes may be silver (Ag) and chromium-nitride (CrN) respectively. Mixing electrically conductive materials between the ion exchange layers of drive and pickup electrodes may be used to optimize a DC offset created by a half-voltage generated by a battery formed by contact of the ion exchange layer with an electrolyte layer (e.g., sweat or other bodily fluid) on a surface of body portion **190**. The substrates (**1011**, **1021**, **1121**) and/or layers (**1023**) the ion exchange layers are formed on may also be used to change electrical properties of the electrode **102**, such as an impedance of the electrode **102**, for example.

**[0069]** The electrodes **102** depicted in FIGS. **10-12** may have shapes and surface profiles that are different than depicted and are not limited to the examples depicted in those figures. As one example, shapes, surface profiles, electrode heights and other dimensions may include those depicted in the examples of FIGS. **7** and **8** or variations thereof. The circuitry depicted in FIG. **8** may be configured to generate and receive signals for measuring or otherwise sensing bio-impedance (BI), GSR, and electrical activity in sympathetic nervous system (e.g., arousal) using the electrodes **102** (e.g., composite electrodes). The electrodes **102** depicted in FIGS. **10-12** may be used as drive composite electrodes (D), as pickup composite electrodes (P), or both.

**[0070]** Reference is now made to FIG. **13** where an example **1300** of a bio-impedance unit **1370** coupled with a variable frequency signal Vf is depicted. In FIG. **13**, body portion **190** may include different structures at different depths Δd, such as arteries, veins, capillary vessels, water, interstitial fluids, and fatty tissues, for example. A frequency (e.g., an AC signal) of a signal applied to the drive electrodes **102**, denoted as D1 and D2 may be optimized to detect electrical activity at different depths Δd within body portion **190**. As one example, arteries are typically larger in diameter than veins or capillaries, and therefore may flow more blood at a higher rate. Fluid dynamics of that blood flow may make it difficult to detect variations in heart rate (HR). However, smaller vessels such as the veins and/or capillaries (e.g., on the return path to the heart) may generate more electrical activity indicative of the pulsing of the heart due to the heart pulses creating differences in pressure and flow in the smaller diameter vessels. The smaller vessels may be positioned at different depths than the arteries and therefore a frequency of the signal applied to drive electrodes may be optimized (e.g., made higher or lower in frequency) to penetrate to a desired depth in the body portion where the structure or structures of interest for a biometric measurement are positioned.

**[0071]** Differences in body types, body composition, body water content, body hydration and other factors may be compensated for by varying frequency of signals applied to drive electrodes (e.g., composite drive electrodes) for measuring one or more biometric parameters including but not limited to bio-impedance, heart rate (HR), heart rate variability (HRV), respiration rate, GSR, hydration, arousal of the SNS, stress, and mood, for example.

**[0072]** In FIG. **13**, a control unit **1350** may include a bio-impedance unit **1370**. Control unit **1350** may include and/or be coupled with other systems such as memory, data storage, a communications interface, one or more processors, circuitry, logic, a frequency source, and a system clock, for example. The bio-impedance unit **1370** may be coupled with a variable frequency signal Vf that may be generated by a frequency source such as an oscillator, clock, piezoelectric device, ceramic resonator, etc. For example, a frequency source **1382** may be coupled with a control signal **1382*c*** generated by bio-impedance unit **1370** in response to a signal **1371** indicative of a type of biometric measurement to be made by the bio-impedance unit **1370**. The frequency source

**1382** may vary the frequency of the variable frequency signal Vf up or down relative to some base frequency, such as 32 KHz, 50 KHz or 24 KHz, for example. The frequency source **1382** may output a signal waveform that may be the same or may be varied, such as a square wave, sine wave, triangle wave, saw tooth wave, or other waveform shapes as denoted by **1378**. Bio-impedance unit **1370** may apply the variable frequency signal Vf to one or more of the drive electrodes **102** (D**1** and/or D**2**). Bio-impedance unit **1370** may receive as inputs, signals from one or both of the pickup electrodes **102** (P**1**, and/or P**2**). The signal applied to the drive electrodes **102** (D**1** and/or D**2**) may be a current signal or a voltage signal for example. Bio-impedance unit **1370** may measure biometric signals other than bio-impedance by varying frequency in response to signal **1371** indicative of a type of biometric measurement to be made. The frequencies generated by frequency source **1382** may be selected to not be an integral multiple of 60 Hz and/or 50 Hz power line noise to prevent degradation of signals processed by control unit **1350**, bio-impedance unit **1370** or other circuitry and/or systems of strap band **100**, for example.

**[0073]** Turning now to FIG. **14** where an example of a block diagram **1400** of a frequency for a variable frequency signal that is derived from a system clock and an example of a schematic **1450** for a bio-impedance unit are depicted. In block diagram **1400** a system clock **1410** may include a frequency reference **1411** (e.g., an XTAL, ceramic resonator, etc.) that generates a system clock **1413** that may be coupled with a clock divider circuit **1420** and may be routed to other systems and/or circuitry of strap band **100**, such as a processor, DSP, data storage, etc. System clock **1413** may be the main clock source for the processor, for example. System clock **1413** may operate at a frequency that is traditionally much lower than frequencies for microprocessors, DSP's and the like. For example, the system clock **1413** may operate at a frequency in the KHz instead of the more typical MHz or higher frequencies. As one example, system clock **1413** may operate at a frequency below 50 KHz. Clock divider circuit **1420** may receive a signal **1421** (e.g., the signal **1371**) operative to divide down the system clock **1413** to a lower frequency or to pass the system clock **1413** unaltered. Accordingly, depending a value (e.g., a digital or analog value) of signal **1421**, Vf may be a frequency that is at or below the frequency of system clock **1413**. Circuitry (not shown) to increase the frequency of system clock **1413** may be used such that Vf may be a frequency that is at or above the frequency of system clock **1413**. For example, for biometric measurements of structure deeper in body portion **190** relative to the electrodes **102**, Vf may be unaltered at 34 KHz; however, for structure closer to the electrodes **102**, Vf may be divided down to 16 KHz.

**[0074]** In the example schematic **1450**, bio-impedance unit **1370** may be coupled with drive amplifiers **1451***d* and **1453***d*, and pickup amplifiers **1452***p* and **1454***p* (e.g., instrumentation amplifiers). Depending on distances Δd**1** or Δd**2** of structures S**1** or S**2** in body portion **190** and/or the type of biometric measurement to be made, bio-impedance unit **1370** may control VA**1**, VA**2** a magnitude **1461** of the signal applied to one or both drive electrodes **102** via drive amplifiers **1451***d* and/or **1453***d*. For example, a magnitude of a current applied to drive amplifiers **1451***d* and **1453***d* at frequency Vf may be controlled by bio-impedance unit **1370**. There may be more or fewer electrodes **102** than depicted in example **1450** as denoted by **1478**.

**[0075]** Bio-impedance unit **1370** may control a gain **1463** of one or both of the pickup amplifiers **1452***p* and **1454***p*. For example, if the signals from the drive amplifier(s) are configured for measuring heart rate from arteries, then a higher magnitude signal from those structures may require a lower gain setting for pickup amplifiers **1452***p* and/or **1454***p*. On the other hand, if the signals from the drive amplifier(s) are configured for measuring heart rate from capillaries, then a lower magnitude signal from those structures may require a higher gain setting for pickup amplifiers **1452***p* and/or **1454***p*.

**[0076]** Bio-impedance unit **1370** may be configured to optimize biometric readings for different bodies of different users to accommodate differences in body polarization due to body sweat, differences in internal body electrical impedance (e.g., that may vary due to hydration, internal body composition), variations in sizes of veins and/or arteries, stretching of veins and/or arteries due to differences in blood flow rates, etc. As one example, bio-impedance unit **1370** may use one frequency to measure GSR and another frequency to measure heart rate. As another example, Bio-impedance unit **1370** may increase pickup amp gain for a user having smaller veins in order to measure heart rate or may reduce pickup amp gain for another user having larger veins in order to measure heart rate.

**[0077]** Although the foregoing examples have been described in some detail for purposes of clarity of understanding, the above-described inventive techniques are not limited to the details provided. There are many alternative ways of implementing the above-described techniques or the present application. The disclosed examples are illustrative and not restrictive.

What is claimed is:

**1**. A system, comprising:

a strap band including an encapsulated wire bus having a plurality of electrodes connected with the wire bus, the wire bus including wires, each wire connected with one of the plurality of electrodes, wherein the plurality of electrodes includes drive electrodes and pickup electrodes,

a band; and

a device including circuitry coupled with the wires, the band and the strap band coupled to the device at opposing ends of the device,

the circuitry including a processor in communication with a control unit, the control unit including a bio-impedance unit coupled with a variable frequency signal and with the wire bus,

the bio-impedance unit coupled with a tissue depth signal configured to select a frequency for the variable frequency signal, the variable frequency signal coupled with the wire of at least one of the drive electrodes, and

the tissue depth signal determined by a biometric measurement type.

**2**. The system of claim **1**, wherein the biometric measurement type comprises a bio-impedance measurement.

**3**. The system of claim **1**, wherein the biometric measurement type comprises a galvanic skin response measurement.

**4**. The system of claim **1**, wherein the biometric measurement type comprises a heart rate measurement.

**5**. The system of claim **1**, wherein the biometric measurement type comprises a respiration rate measurement.

**6**. The system of claim **1**, wherein the biometric measurement type comprises a selected one of mood, arousal of the sympathetic nervous system, hydration, or stress.

**7**. The system of claim **1**, wherein the tissue depth signal is operative to set a magnitude of a drive signal applied to the wire of one or more of the drive electrodes.

**8**. The system of claim **7**, wherein the drive signal comprises a current sourced by an amplifier circuit.

**9**. The system of claim **1**, wherein the bio-impedance unit is coupled with a gain signal configured to select a gain for a pickup amplifier coupled with the wire of one of the pickup electrodes.

**10**. The system of claim **9**, wherein a magnitude of the gain signal is determined by the biometric measurement type.

**11**. The system of claim **1**, wherein at least one of the electrodes comprises a composite electrode.

**12**. The system of claim **1**, wherein the frequency for the variable frequency signal is derived from a system clock.

**13**. A device, comprising:

a strap band;

a wire bus encapsulated in the strap band and including a plurality of composite electrodes, each composite electrode coupled with a wire, each composite electrode including a substrate made from a first material and an ion exchange layer electrically coupled with the substrate, the ion exchange layer made from a second material that is different than the first material,

the plurality of composite electrodes are grouped into two pairs with each pair including a drive composite electrode adjacent to a pickup composite electrode that are spaced apart from each other by an identical distance, and innermost pickup composite electrodes in each pair are spaced apart by a distance that is approximately one-third of a length of the strap band; and

circuitry coupled with each wire, the circuitry including a processor in communication with a control unit, the control unit including a bio-impedance unit coupled with a variable frequency signal and with each wire,

the bio-impedance unit coupled with a tissue depth signal configured to select a frequency for the variable frequency signal, the variable frequency signal coupled with the wire of at least one of the drive composite electrodes, and

the tissue depth signal determined by a biometric measurement type.

**14**. The device of claim **13**, wherein the biometric measurement type comprises a bio-impedance measurement.

**15**. The device of claim **13**, wherein the biometric measurement type comprises a galvanic skin response measurement.

**16**. The device of claim **13**, wherein the biometric measurement type comprises a heart rate measurement.

**17**. The device of claim **13**, wherein the biometric measurement type comprises a respiration rate measurement.

**18**. The device of claim **13**, wherein the biometric measurement type comprises a selected one of mood, arousal of the sympathetic nervous system, hydration, or stress.

**19**. The device of claim **13**, wherein the bio-impedance unit is coupled with a gain signal configured to select a gain for a pickup amplifier coupled with the wire of one of the pickup composite electrodes.

**20**. The device of claim **13**, wherein the frequency for the variable frequency signal is derived from a system clock.

* * * * *

| | | | |
|---|---|---|---|
| 专利名称(译) | 用于可穿戴设备的带子带 | | |
| 公开(公告)号 | US20160066812A1 | 公开(公告)日 | 2016-03-10 |
| 申请号 | US14/121944 | 申请日 | 2014-11-05 |
| [标]申请(专利权)人(译) | 成希尔维亚后燕<br>LUNA MICHAEL EDWARD SMITH<br>元始天尊西德尼<br>STIVORIC JOHN中号 | | |
| 申请(专利权)人(译) | 程，希尔维亚hou-yan<br>LUNA，MICHAEL EDWARD SMITH<br>PRIMUS，悉尼<br>STIVORIC，JOHN M. | | |
| 当前申请(专利权)人(译) | Alifak | | |
| [标]发明人 | CHENG SYLVIA HOU YAN<br>LUNA MICHAEL EDWARD SMITH<br>PRIMUS SIDNEY<br>STIVORIC JOHN M | | |
| 发明人 | CHENG, SYLVIA HOU-YAN<br>LUNA, MICHAEL EDWARD SMITH<br>PRIMUS, SIDNEY<br>STIVORIC, JOHN M. | | |
| IPC分类号 | A61B5/053 A61B5/00 A61B5/024 A61B5/16 | | |
| CPC分类号 | A61B5/0533 A61B5/0537 A61B5/024 A61B5/4035 A61B5/681 A61B5/165 A61B5/02438 A61B5/02444 A61B5/0245 A61B5/7225 A61B2562/0215 A61B2562/043 A61B2562/222 | | |
| 外部链接 | Espacenet USPTO | | |

**摘要(译)**

本发明描述了一种带束，其包括具有电极的柔性导线总线和与电极耦合的导线。带带可以与包括电路的装置耦合，该电路被配置为在一些电极上驱动信号并从非驱动电极接收信号。可以改变施加到驱动电极的信号频率以增加/减小信号穿透深度，以感测位于主体部分中的不同深度处的不同身体结构。可以选择用于不同类型测量的不同频率以优化对交感神经系统中的生物阻抗，皮肤电反应，听觉率，呼吸，心率变异性，水合，炎症，压力和唤醒的感测。系统时钟频率可以是所使用的频率之一。可以基于所选择的频率来调整驱动信号的幅度，接收信号的增益或两者，和/或感测来自感兴趣的身体结构的信号。