US008795172B2

(12) **United States Patent**
Abolfathi et al.

(10) **Patent No.: US 8,795,172 B2**
(45) **Date of Patent: Aug. 5, 2014**

(54) **SYSTEMS AND METHODS TO PROVIDE TWO-WAY COMMUNICATIONS**

(75) Inventors: **Amir Abolfathi**, Woodside, CA (US); **Reza Kassayan**, Atherton, CA (US)

(73) Assignee: **Sonitus Medical, Inc.**, San Mateo, CA (US)

(*) Notice: Subject to any disclaimer, the term of this patent is extended or adjusted under 35 U.S.C. 154(b) by 1125 days.

(21) Appl. No.: **11/952,780**

(22) Filed: **Dec. 7, 2007**

(65) **Prior Publication Data**

US 2009/0149722 A1 Jun. 11, 2009

(51) **Int. Cl.**

A61B 5/00	(2006.01)
H04L 29/08	(2006.01)
G06F 19/00	(2011.01)
H04M 1/60	(2006.01)
H04M 1/05	(2006.01)
H04W 4/20	(2009.01)

(52) **U.S. Cl.**

CPC ***A61B 5/0002*** (2013.01); ***H04L 67/12*** (2013.01); *A61B 5/4504* (2013.01); *H04M 1/05* (2013.01); *H04W 4/20* (2013.01); *H04L 67/18* (2013.01); ***G06F 19/3418*** (2013.01); ***H04M 1/6066*** (2013.01); ***A61B 5/682*** (2013.01)

USPC **600/301**

(58) **Field of Classification Search**

USPC 600/300–301; 434/112

See application file for complete search history.

(56) **References Cited**

U.S. PATENT DOCUMENTS

2,045,404	A	6/1936	Nicholides
2,161,169	A	6/1939	Jefferis
2,318,872	A	5/1943	Madiera
2,977,425	A	3/1961	Cole
2,995,633	A	8/1961	Puharich et al.
3,156,787	A	11/1964	Puharich et al.

(Continued)

FOREIGN PATENT DOCUMENTS

EP	0715838	A2	6/1996
EP	0741940	A1	11/1996

(Continued)

OTHER PUBLICATIONS

"Special Forces Smart Noise Cancellation Ear Buds with Built-In GPS," http://www.gizmag.com/special-forces-smart-noise-cancellation-ear-buds-with-built-in-gps/9428/, 2 pages, 2008.

(Continued)

Primary Examiner — William Thomson
Assistant Examiner — Bobby Soriano
(74) *Attorney, Agent, or Firm* — Levine Bagade Han LLP

(57) **ABSTRACT**

An electronic and transducer device can be attached, adhered, or otherwise embedded into or upon a removable oral appliance or other oral device to form a two-way communication assembly. In another embodiment, the device provides an electronic and transducer device that can be attached, adhered, or otherwise embedded into or upon a removable oral appliance or other oral device to form a medical tag containing patient identifiable information. Such an oral appliance may be a custom-made device fabricated from a thermal forming process utilizing a replicate model of a dental structure obtained by conventional dental impression methods. The electronic and transducer assembly may receive incoming sounds either directly or through a receiver to process and amplify the signals and transmit the processed sounds via a vibrating transducer element coupled to a tooth or other bone structure, such as the maxillary, mandibular, or palatine bone structure.

37 Claims, 24 Drawing Sheets

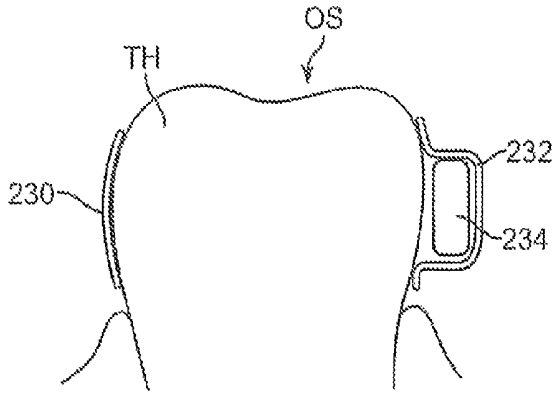

(56) **References Cited**

U.S. PATENT DOCUMENTS

3,170,993 A 2/1965 Puharich et al.
3,267,931 A 8/1966 Puharich et al.
3,325,743 A 6/1967 Blum
3,787,641 A 1/1974 Santori
3,894,196 A 7/1975 Briskey
3,985,977 A 10/1976 Beaty et al.
4,025,732 A 5/1977 Traunmuller
4,150,262 A 4/1979 Ono
4,498,461 A 2/1985 Hakansson
4,591,668 A 5/1986 Iwata
4,612,915 A 9/1986 Hough et al.
4,642,769 A 2/1987 Petrofsky
4,738,268 A 4/1988 Kipnis
4,817,044 A 3/1989 Ogren
4,832,033 A 5/1989 Maher et al.
4,920,984 A 5/1990 Furumichi et al.
4,982,434 A 1/1991 Lenhardt et al.
5,012,520 A 4/1991 Steeger
5,033,999 A 7/1991 Mersky
5,047,994 A 9/1991 Lenhardt et al.
5,060,526 A 10/1991 Barth et al.
5,082,007 A 1/1992 Adell
5,233,987 A 8/1993 Fabian et al.
5,323,468 A 6/1994 Bottesch
5,325,436 A 6/1994 Soli et al.
5,372,142 A 12/1994 Madsen et al.
5,402,496 A 3/1995 Soli et al.
5,403,262 A 4/1995 Gooch
5,447,489 A 9/1995 Issalene et al.
5,455,842 A 10/1995 Mersky et al.
5,460,593 A 10/1995 Mersky et al.
5,546,459 A 8/1996 Sih et al.
5,558,618 A 9/1996 Maniglia
5,565,759 A 10/1996 Dunstan
5,616,027 A 4/1997 Jacobs et al.
5,624,376 A 4/1997 Ball et al.
5,661,813 A 8/1997 Shimauchi et al.
5,706,251 A 1/1998 May
5,730,151 A * 3/1998 Summer et al. 600/587
5,760,692 A 6/1998 Block
5,800,336 A 9/1998 Ball et al.
5,812,496 A 9/1998 Peck
5,828,765 A 10/1998 Gable
5,902,167 A 5/1999 Filo et al.
5,914,701 A 6/1999 Gersheneld et al.
5,961,443 A 10/1999 Rastatter et al.
5,980,246 A * 11/1999 Ramsay et al. 433/5
5,984,681 A 11/1999 Huang
6,029,558 A 2/2000 Stevens et al.
6,047,074 A 4/2000 Zoels et al.
6,068,590 A 5/2000 Brisken
6,072,884 A 6/2000 Kates
6,072,885 A 6/2000 Stockham, Jr. et al.
6,075,557 A 6/2000 Holliman et al.
6,115,477 A 9/2000 Filo et al.
6,118,882 A 9/2000 Haynes
6,171,229 B1 1/2001 Kroll et al.
6,223,018 B1 4/2001 Fukumoto et al.
6,239,705 B1 5/2001 Glen
6,333,269 B2 12/2001 Naito et al.
6,377,693 B1 4/2002 Lippa et al.
6,394,969 B1 5/2002 Lenhardt
6,504,942 B1 1/2003 Hong et al.
6,538,558 B2 3/2003 Sakazume et al.
6,585,637 B2 7/2003 Brillhart et al.
6,631,197 B1 10/2003 Taenzer
6,633,747 B1 10/2003 Reiss
6,682,472 B1 1/2004 Davis
6,754,472 B1 6/2004 Williams et al.
6,778,674 B1 8/2004 Panasik et al.
6,826,284 B1 11/2004 Benesty et al.
6,885,753 B2 4/2005 Bank
6,917,688 B2 7/2005 Yu et al.
6,941,952 B1 9/2005 Rush, III
6,954,668 B1 10/2005 Cuozzo
6,985,599 B2 1/2006 Asnes
7,003,099 B1 2/2006 Zhang et al.
7,033,313 B2 4/2006 Lupin et al.
7,035,415 B2 4/2006 Belt et al.
7,074,222 B2 7/2006 Westerkull
7,076,077 B2 7/2006 Atsumi et al.
7,099,822 B2 8/2006 Zangi
7,162,420 B2 1/2007 Zangi et al.
7,171,003 B1 1/2007 Venkatesh et al.
7,171,008 B2 1/2007 Elko
7,174,022 B1 2/2007 Zhang et al.
7,206,423 B1 4/2007 Feng et al.
7,246,058 B2 7/2007 Burnett
7,258,533 B2 8/2007 Tanner et al.
7,269,266 B2 9/2007 Anjanappa et al.
7,271,569 B2 9/2007 Oglesbee
7,310,427 B2 12/2007 Retchin et al.
7,329,226 B1 2/2008 Ni et al.
7,331,349 B2 2/2008 Brady et al.
7,333,624 B2 2/2008 Husung
7,361,216 B2 4/2008 Kangas et al.
7,409,070 B2 8/2008 Pitulia
7,486,798 B2 2/2009 Anjanappa et al.
7,520,851 B2 4/2009 Davis et al.
7,522,738 B2 4/2009 Miller, III
7,522,740 B2 4/2009 Julstrom et al.
7,610,919 B2 * 11/2009 Utley et al. 131/270
2001/0003788 A1 6/2001 Ball et al.
2001/0051776 A1 12/2001 Lenhardt
2002/0026091 A1 2/2002 Leysieffer
2002/0071581 A1 6/2002 Leysieffer et al.
2002/0077831 A1 6/2002 Numa
2002/0122563 A1 9/2002 Schumaier
2002/0173697 A1 11/2002 Lenhardt
2003/0059078 A1 3/2003 Downs et al.
2003/0091200 A1 5/2003 Pompei
2003/0212319 A1 11/2003 Magill
2004/0057591 A1 3/2004 Beck et al.
2004/0131200 A1 7/2004 Davis
2004/0141624 A1 7/2004 Davis et al.
2004/0202339 A1 10/2004 O'Brien, Jr. et al.
2004/0202344 A1 10/2004 Anjanappa et al.
2004/0243481 A1 12/2004 Bradbury et al.
2004/0247143 A1 12/2004 Lantrua et al.
2005/0037312 A1 2/2005 Uchida
2005/0067816 A1 3/2005 Buckman
2005/0070782 A1 3/2005 Brodkin
2005/0129257 A1 6/2005 Tamura
2005/0196008 A1 9/2005 Anjanappa et al.
2005/0241646 A1 11/2005 Sotos et al.
2006/0008106 A1 1/2006 Harper
2006/0025648 A1 2/2006 Lupin et al.
2006/0064037 A1 3/2006 Shalon et al.
2006/0166157 A1 * 7/2006 Rahman et al. 433/6
2006/0167335 A1 7/2006 Park et al.
2006/0270467 A1 11/2006 Song et al.
2006/0275739 A1 12/2006 Ray
2007/0010704 A1 1/2007 Pitulia
2007/0036370 A1 2/2007 Granovetter et al.
2007/0041595 A1 2/2007 Carazo et al.
2007/0105072 A1 * 5/2007 Koljonen 434/112
2007/0142072 A1 6/2007 Lassally
2007/0230713 A1 10/2007 Davis
2007/0242835 A1 10/2007 Davis
2007/0265533 A1 11/2007 Tran
2007/0276270 A1 11/2007 Tran
2007/0280491 A1 12/2007 Abolfathi
2007/0280492 A1 12/2007 Abolfathi
2007/0280493 A1 12/2007 Abolfathi
2007/0280495 A1 12/2007 Abolfathi
2007/0286440 A1 12/2007 Abolfathi et al.
2007/0291972 A1 12/2007 Abolfathi et al.
2008/0019542 A1 1/2008 Menzel et al.
2008/0019557 A1 1/2008 Bevirt et al.
2008/0021327 A1 1/2008 El-Bialy et al.
2008/0064993 A1 3/2008 Abolfathi et al.
2008/0070181 A1 3/2008 Abolfathi et al.
2008/0227047 A1 * 9/2008 Lowe et al. 433/2
2008/0304677 A1 12/2008 Abolfathi et al.

(56) **References Cited**

U.S. PATENT DOCUMENTS

2009/0028352	A1	1/2009	Petroff
2009/0052698	A1	2/2009	Rader et al.
2009/0088598	A1	4/2009	Abolfathi
2009/0097684	A1	4/2009	Abolfathi et al.
2009/0097685	A1	4/2009	Menzel et al.
2009/0099408	A1	4/2009	Abolfathi et al.
2009/0105523	A1	4/2009	Kassayan et al.
2009/0147976	A1	6/2009	Abolfathi
2009/0180652	A1	7/2009	Davis et al.

FOREIGN PATENT DOCUMENTS

EP	0824889	A1	2/1998
EP	1299052	A1	2/2002
EP	1633284	A1	12/2004
EP	1691686	A1	8/2006
EP	1718255	A1	11/2006
EP	1783919	A1	5/2007
JP	2003-070752		3/2003
JP	2003-310561		11/2003
JP	2004-167120		6/2004
JP	2005-278765		10/2005
JP	2007028248	A2	2/2007
JP	2007028610	A2	2/2007
JP	2007044284	A2	2/2007
JP	2007049599	A2	2/2007
JP	2007049658	A2	2/2007
WO	WO 83/02047		6/1983
WO	WO 91/02678		3/1991
WO	WO 95/19678		7/1995
WO	WO 96/21335		7/1996
WO	WO 02/09622		2/2002
WO	WO 2004/045242		5/2004
WO	WO 2004/105650		12/2004
WO	WO 2005/000391		1/2005
WO	WO 2005/037153		4/2005
WO	WO 2005/053533		6/2005
WO	WO 2006/088410		8/2006
WO	WO 2006/130909		12/2006
WO	WO 2007/043055		4/2007
WO	WO 2007/052251		5/2007
WO	WO 2007/059185		5/2007
WO	WO 2007/140367		12/2007
WO	WO 2007/140368		12/2007
WO	WO 2007/140373		12/2007
WO	WO 2007/143453		12/2007
WO	WO 2008/024794		2/2008
WO	WO 2008/030725		3/2008
WO	WO 2009/014812		1/2009
WO	WO 2009/025917		2/2009
WO	WO 2009/066296		5/2009
WO	WO 2009/073852		6/2009

OTHER PUBLICATIONS

Altmann, et al. Foresighting the new technology waves—Exper Group. In: State of the Art Reviews and Related Papers—Center on Nanotechnology and Society. 2004 Conference. Published Jun. 14, 2004. Page 1-291. Available at http://www.nano-and-society.org.

Berard, G., "Hearing Equals Behavior" [summary], 1993, http://www.bixby.org/faq/tinnitus/treatment.html.

Broyhill, D., "Battlefield Medical Information System—Telemedicine," A research paper presented to the U.S. Army Command and General Staff College in partial Fulfillment of the requirement for A462 Combat Health Support Seminar, 12 pages, 2003.

Dental Cements—Premarket Notification, U.S. Department of Health and Human Services Food and Drug Administration Center for Devices and Radiological Health, pp. 1-10, Aug. 18, 1998.

Henry, et al. "Comparison of Custom Sounds for Achieving Tinnitus Relief, " *J Am Acad Audiol*,15:585-598, 2004.

Jastreboff, Pawel, J., "Phantom auditory perception (tinnitus): mechanisms of generation and perception," *Neuroscience Research*, 221-254, 1990, Elsevier Scientific Publishers Ireland, Ltd.

Robb, "Tinnitus Device Directory Part I," *Tinnitus Today*, p. 22, Jun. 2003.

Song, S. et al., "A 0.2-mW 2-Mb/s Digital Transceiver Based on Wideband Signaling for Human Body Communications," *IEEE J Solid-State Cir*, 42(9), 2021-2033, Sep. 2007.

Stuart, A., et al., "Investigations of the Impact of Altered Auditory Feedback In-The-Ear Devices on the Speech of People Who Stutter: Initial Fitting and 4-Month Follow-Up," *Int J Lang Commun Disord*, 39(1), Jan. 2004, [abstract only].

U.S. Appl. No. 11/672,239, filed Feb. 7, 2007 in the name of Abolfathi, Non-final Office Action mailed Jun. 18, 2009.

U.S. Appl. No. 11/672,239, filed Feb. 7, 2007 in the name of Abolfathi, Non-final Office Action mailed Nov. 13, 2008.

U.S. Appl. No. 11/672,250, filed Feb. 7, 2007 in the name of Abolfathi, Non-final Office Action mailed Apr. 21, 2009.

U.S. Appl. No. 11/672,250, filed Feb. 7, 2007 in the name of Abolfathi, Non-final Office Action mailed Aug. 8, 2008.

U.S. Appl. No. 11/672,264, filed Feb. 7, 2007 in the name of Abolfathi, Non-Final Rejection mailed Apr. 28, 2009.

U.S. Appl. No. 11/672,264, filed Feb. 7, 2007 in the name of Abolfathi, Non-Final Rejection mailed Aug. 6, 2008.

U.S. Appl. No. 11/672,271, filed Feb. 7, 2007 in the name of Abolfathi, Final Office Action mailed May 18, 2009.

U.S. Appl. No. 11/672,271, filed Feb. 7, 2007 in the name of Abolfathi, Non-final Office Action mailed Aug. 20, 2008.

U.S. Appl. No. 11/741,648, filed Apr. 27, 2007 in the name of Menzel et al., Final Office Action mailed May 18, 2009.

U.S. Appl. No. 11/741,648, filed Apr. 27, 2007 in the name of Menzel et al., Non-final Office Action mailed Sep. 4, 2008.

U.S. Appl. No. 11/754,823, filed May 29, 2007 in the name of Abolfathi et al., Final Office Action mailed May 12, 2009.

U.S. Appl. No. 11/754,823, filed May 29, 2007 in the name of Abolfathi et al., Non-final Office Action mailed Aug. 14, 2008.

U.S. Appl. No. 11/754,833, filed May 29, 2007 in the name of Abolfathi et al., Final Office Action mailed May 14, 2009.

U.S. Appl. No. 11/754,833, filed May 29, 2007 in the name of Abolfathi et al., Non-final Office Action mailed Aug. 6, 2008.

U.S. Appl. No. 11/866,345, filed May 29, 2007 in the name of Abolfathi et al., Final Office Action mailed Apr. 15, 2009.

U.S. Appl. No. 11/866,345, filed May 29, 2007 in the name of Abolfathi et al., Non-final Office Action mailed Mar. 19, 2008.

Wen, Y. et al, "Online Prediction of Battery Lifetime for Embedded and Mobile Devices," Special Issue on Embedded Systems: Springer-Verlag Heidelberg Lecture Notes in Computer Science, V3164/2004, 15 pages, Dec. 2004.

* cited by examiner

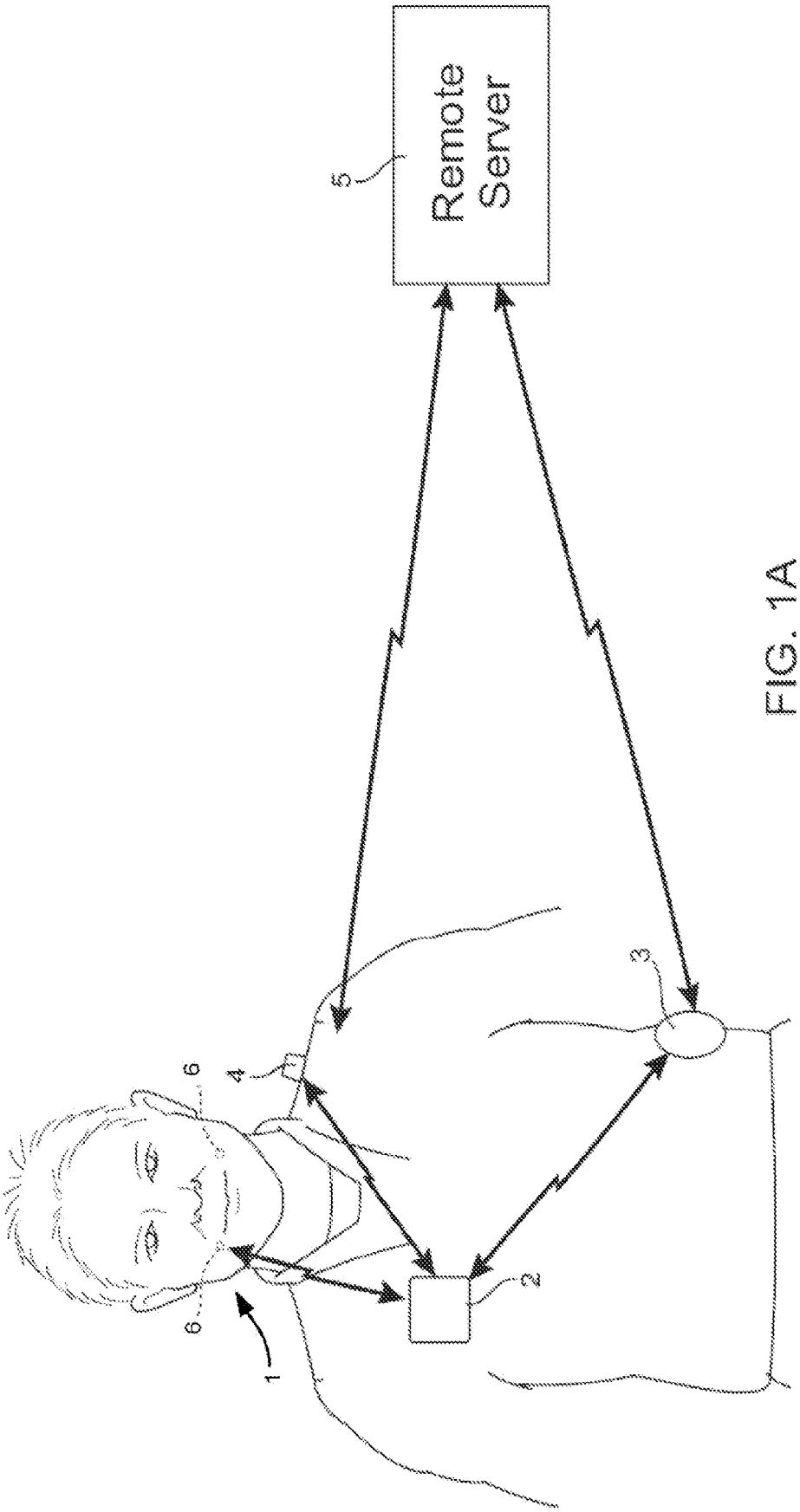

FIG. 1A

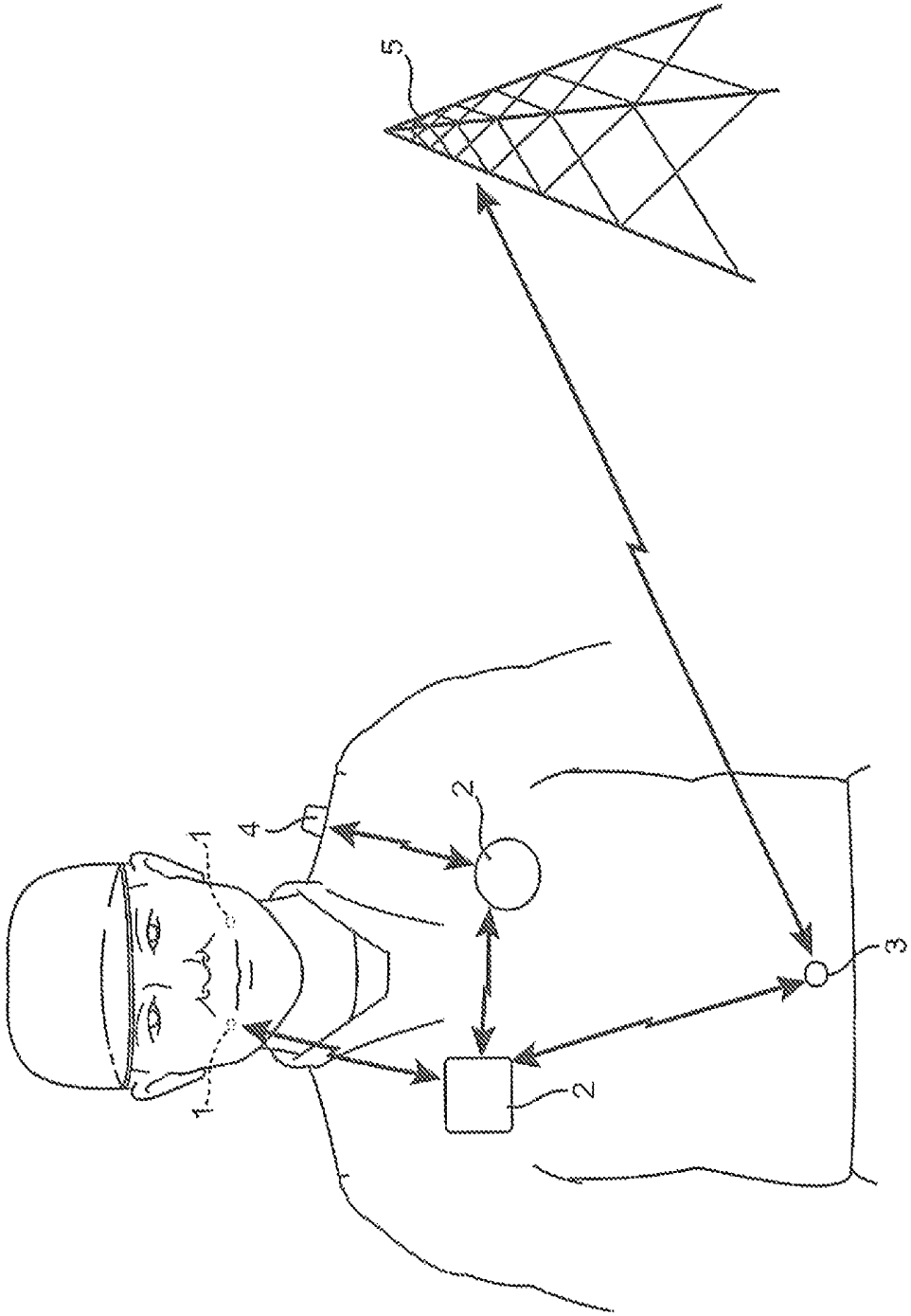

FIG. 1B

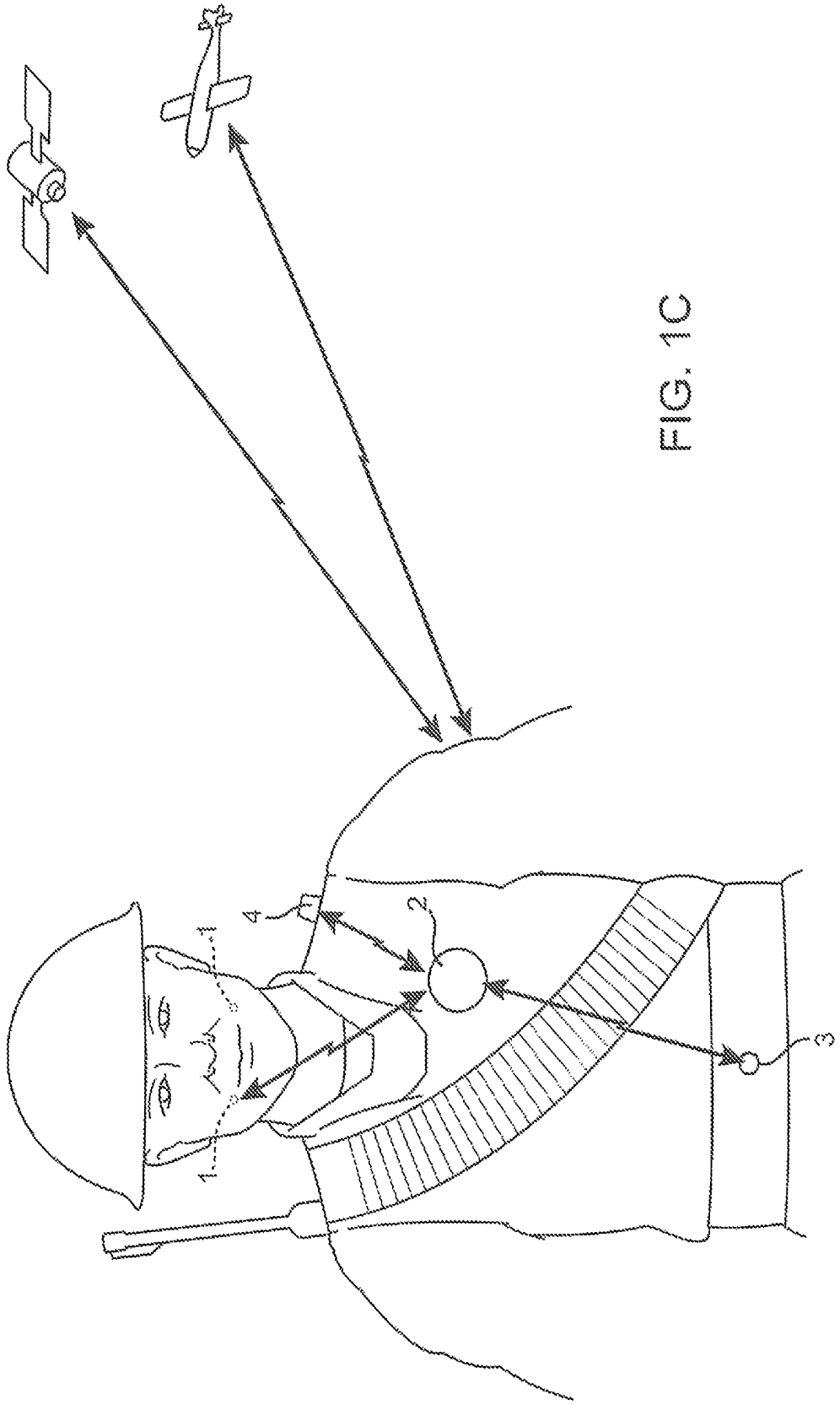

FIG. 1C

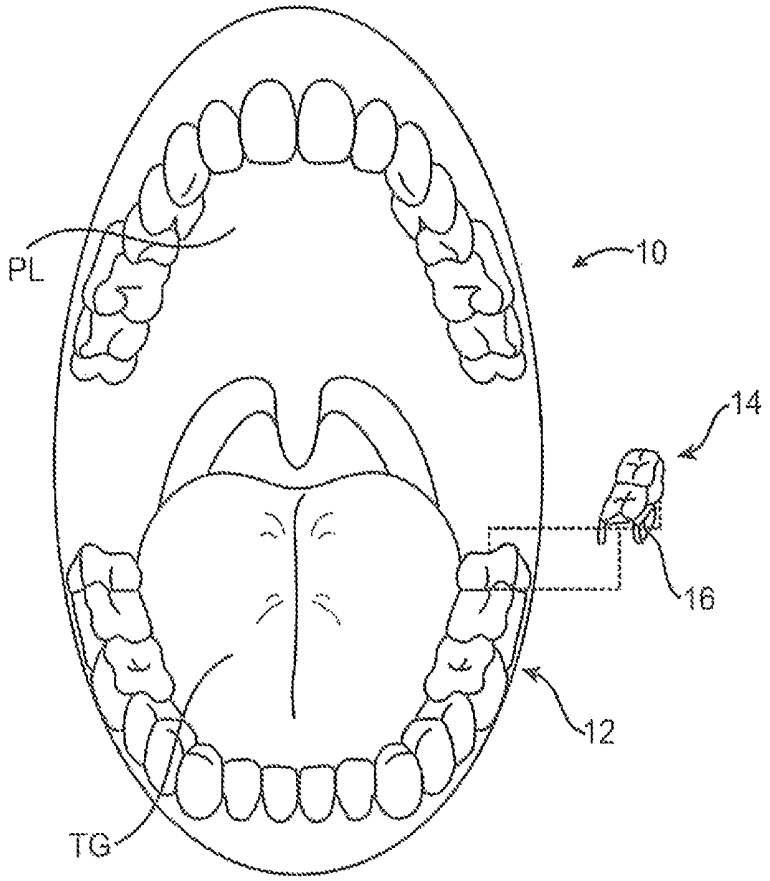

FIG. 1D

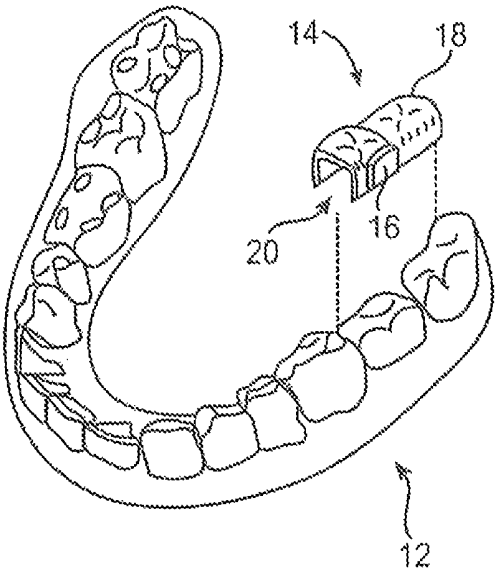

FIG. 2A

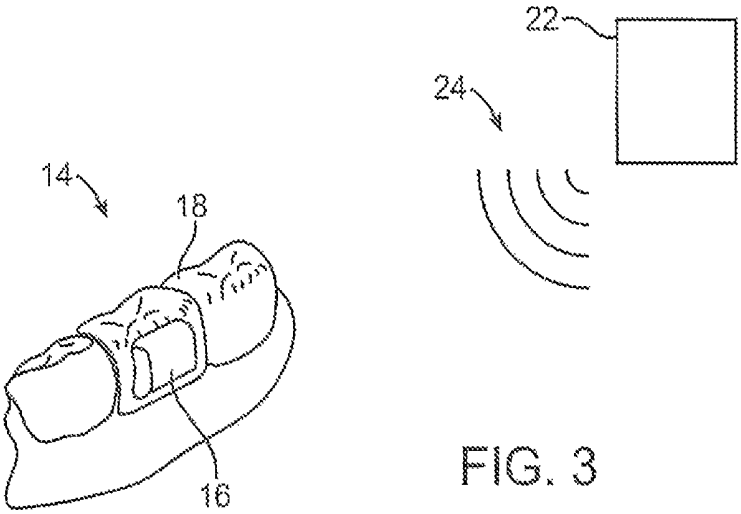

FIG. 3

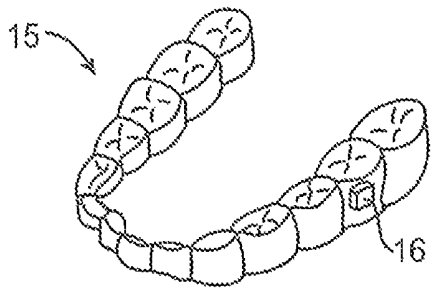

FIG. 2B

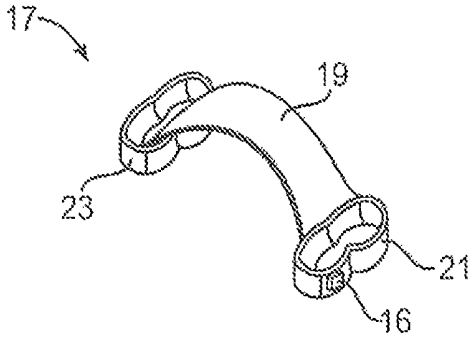

FIG. 2C

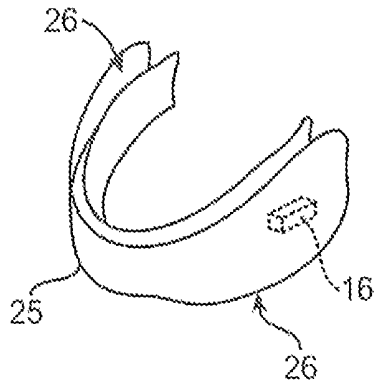

FIG. 2D

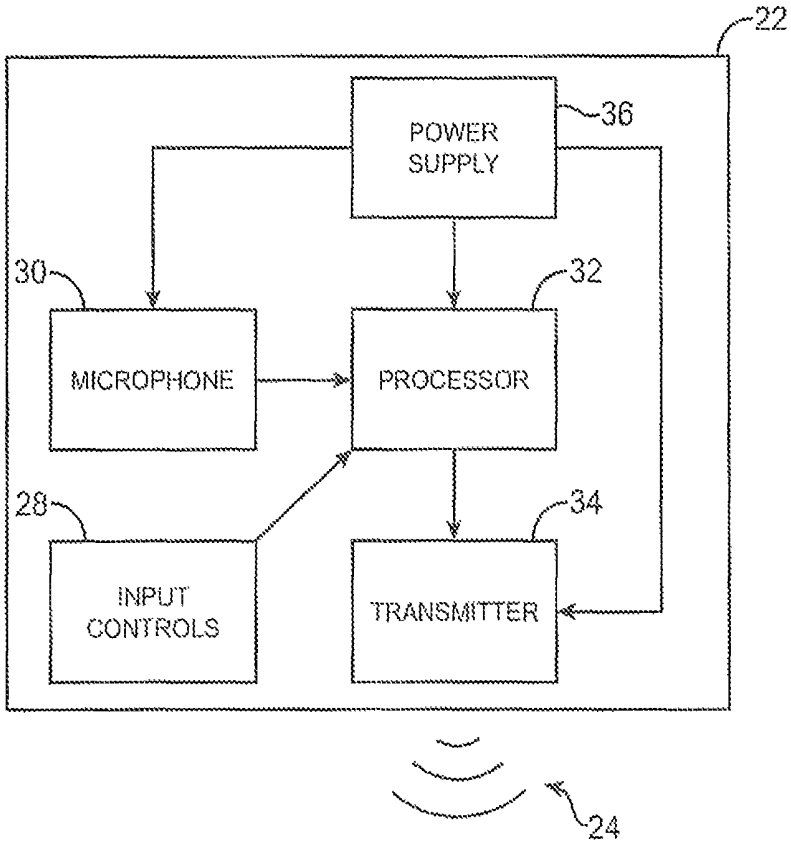
22
POWER SUPPLY
36
30
32
MICROPHONE
PROCESSOR
28
34
INPUT CONTROLS
TRANSMITTER
24

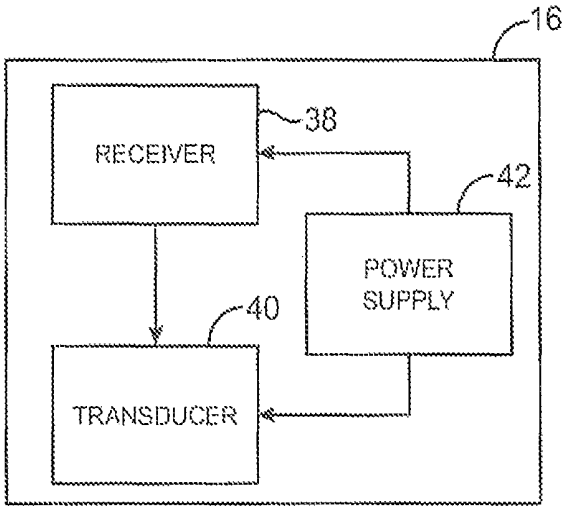
16
RECEIVER
38
42
POWER SUPPLY
40
TRANSDUCER

FIG. 4

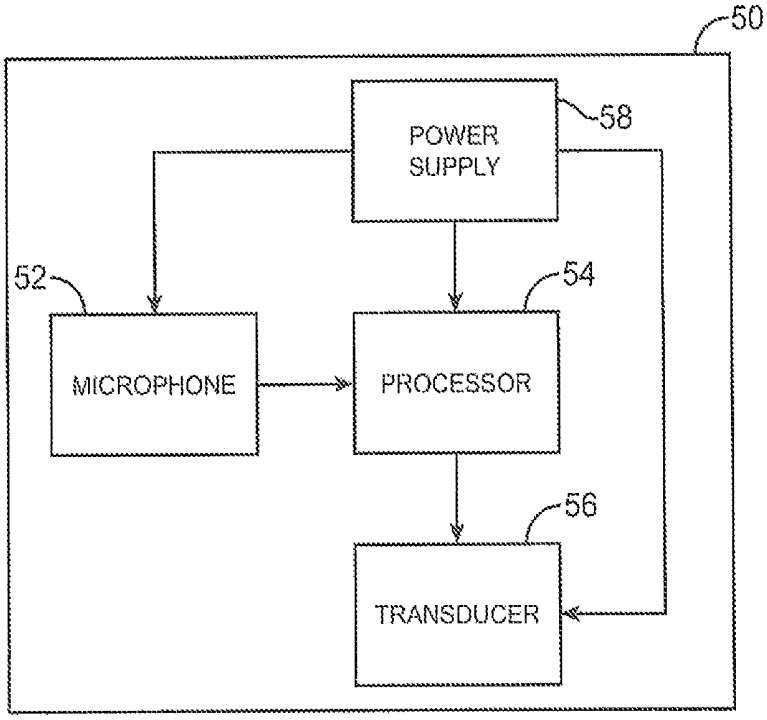
50
POWER SUPPLY
58
52
54
MICROPHONE
PROCESSOR
56
TRANSDUCER

FIG. 5

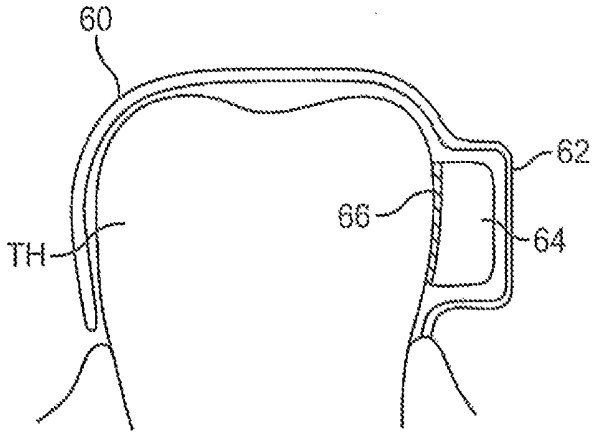

FIG. 6A

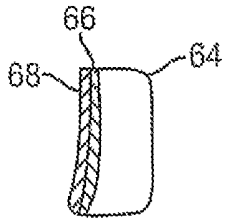

FIG. 6B

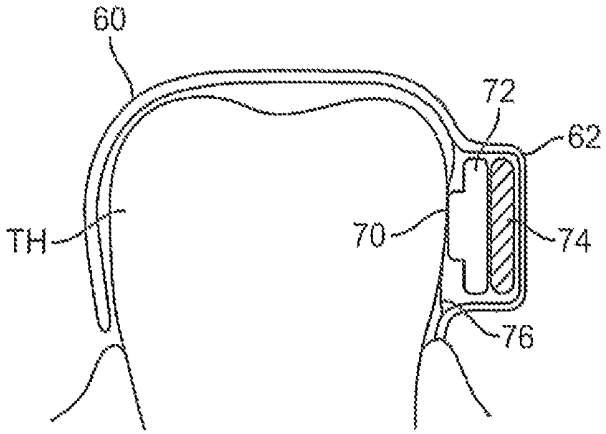

FIG. 7

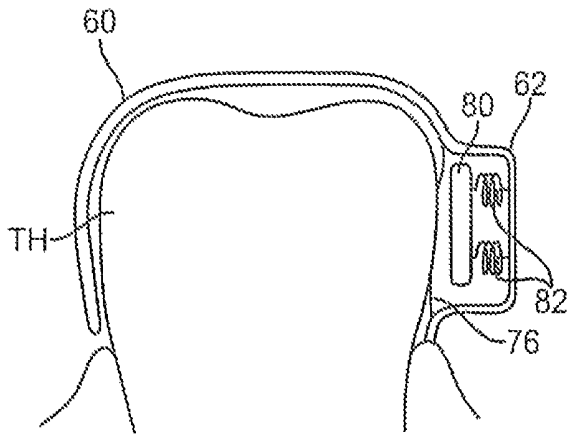

FIG. 8

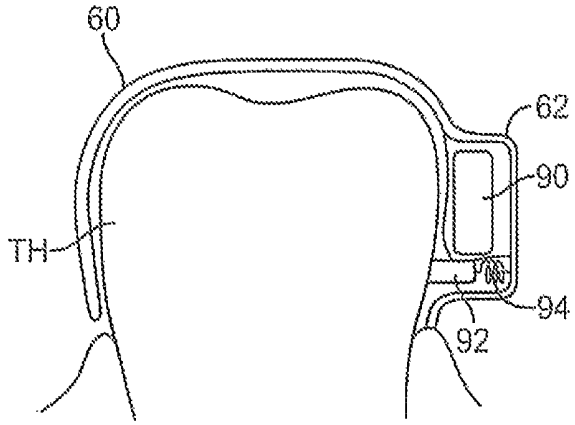

FIG. 9

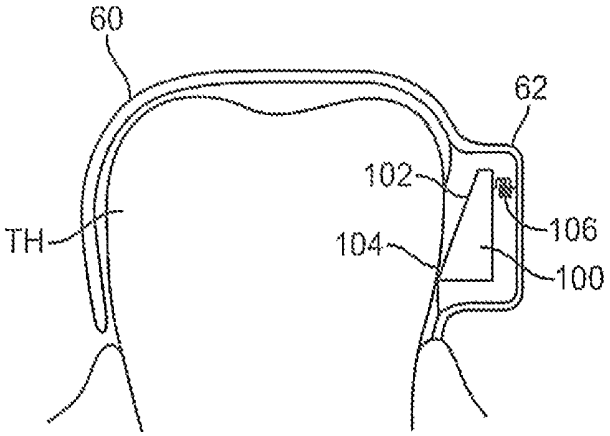

FIG. 10

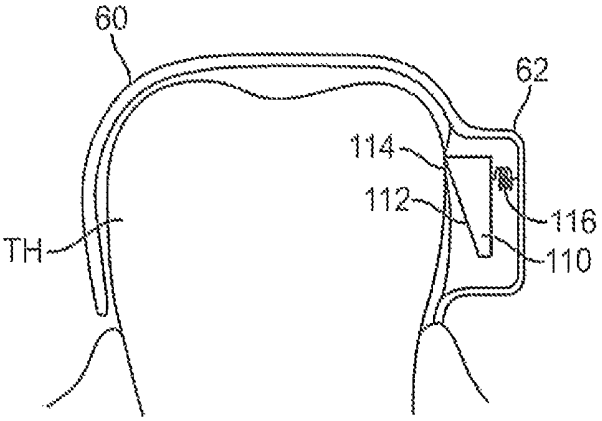

FIG. 11

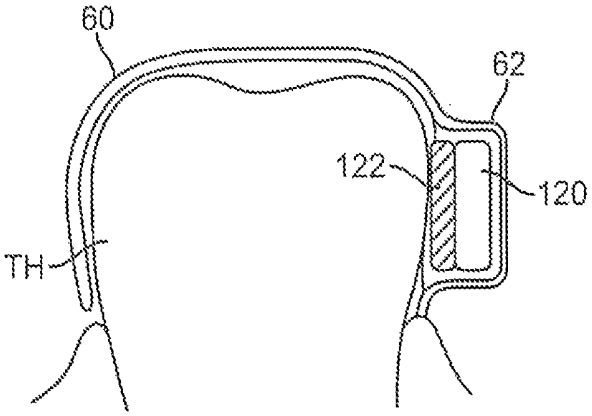

FIG. 12

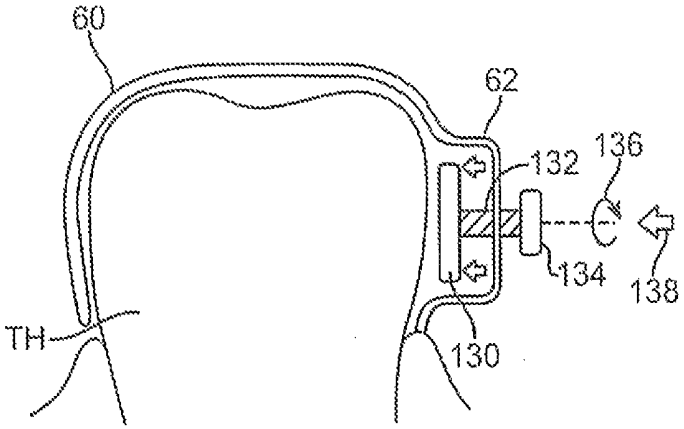

FIG. 13

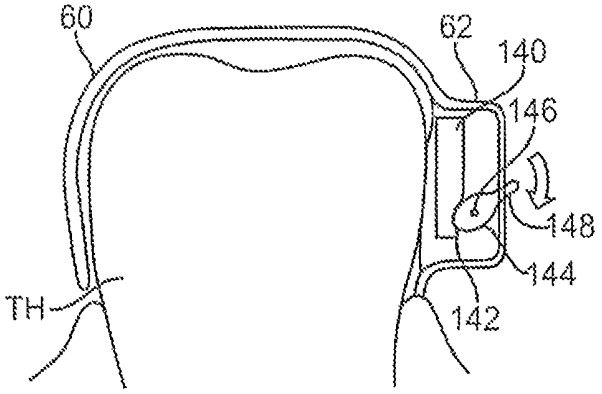

FIG. 14

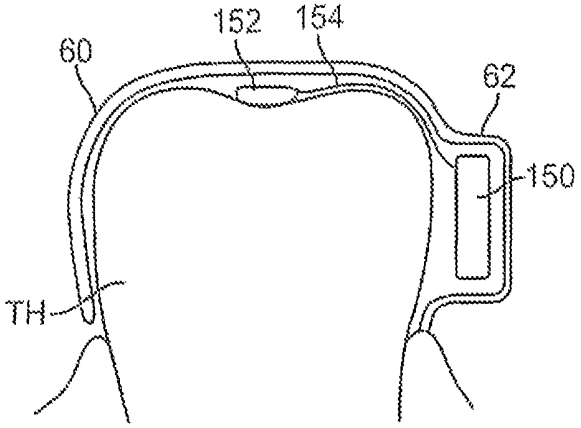

FIG. 15

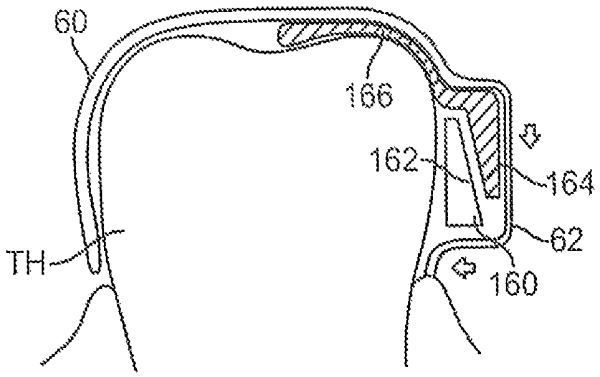

FIG. 16

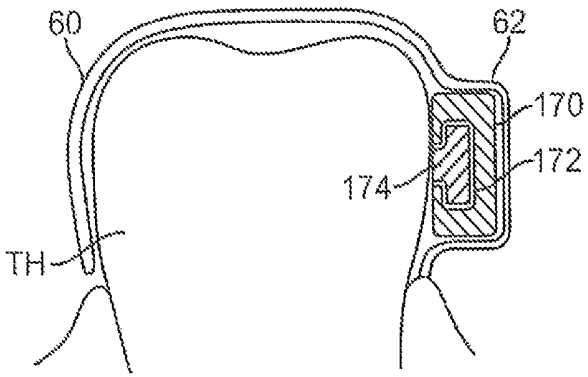

FIG. 17

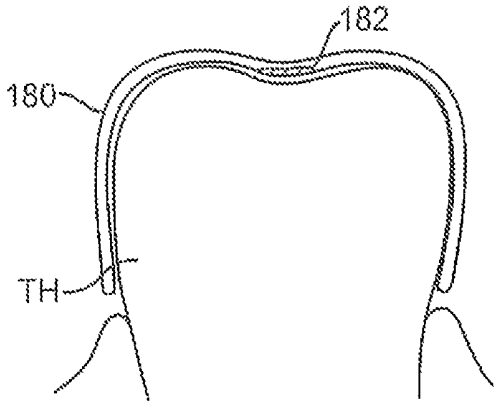

FIG. 18A

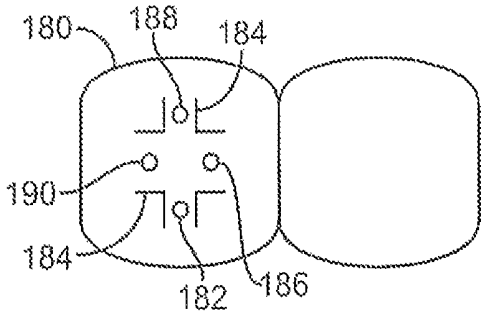

FIG. 18B

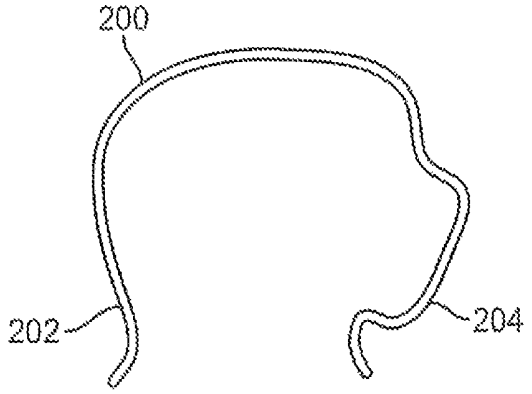

FIG. 19A

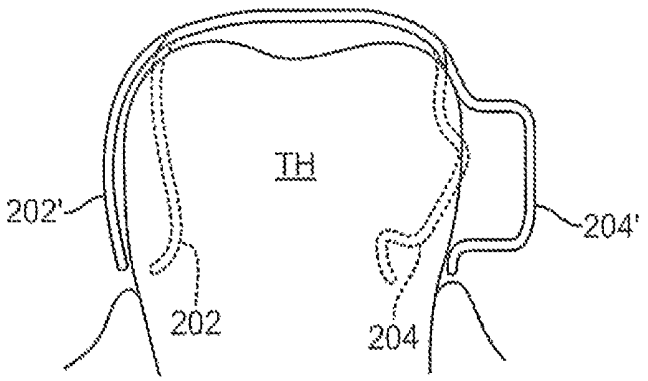

FIG. 19B

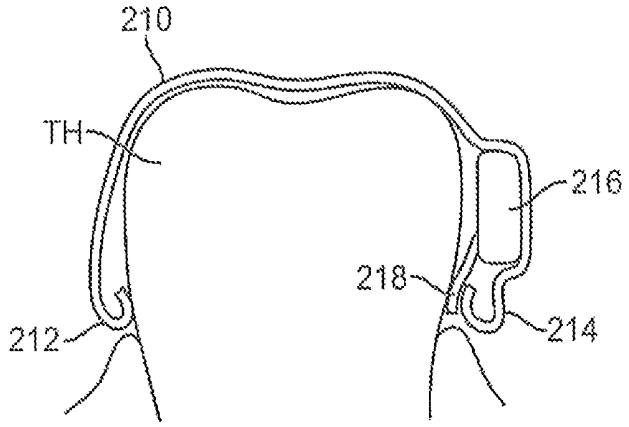

FIG. 20

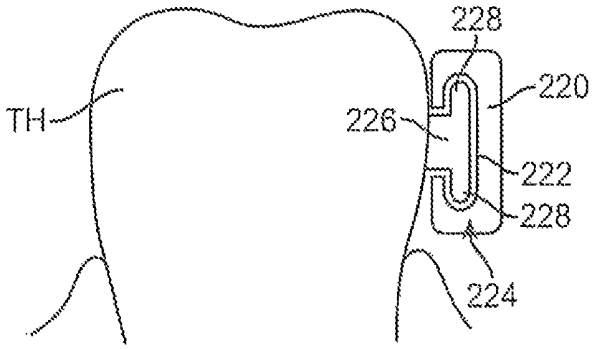

FIG. 21

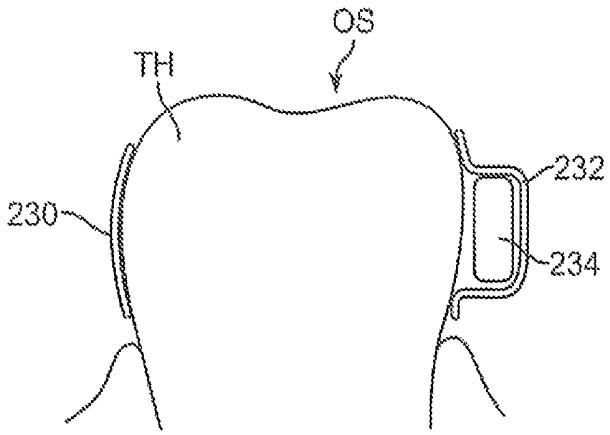

FIG. 22A

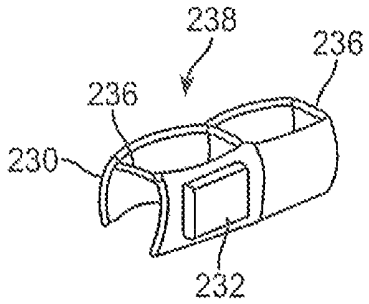

FIG. 22B

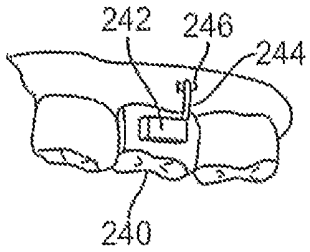

FIG. 23A

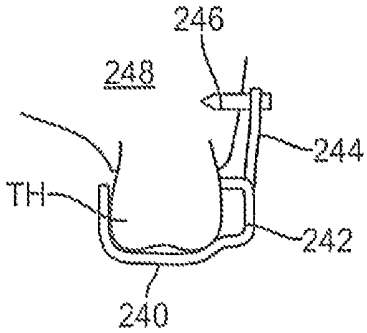

FIG. 23B

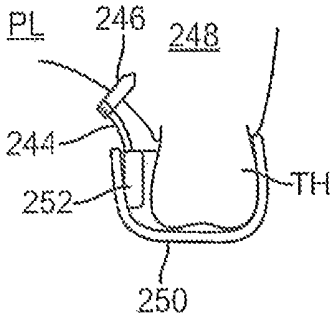

FIG. 24

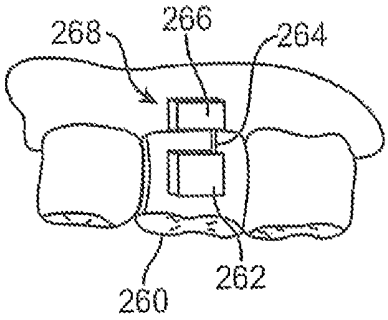

FIG. 25A

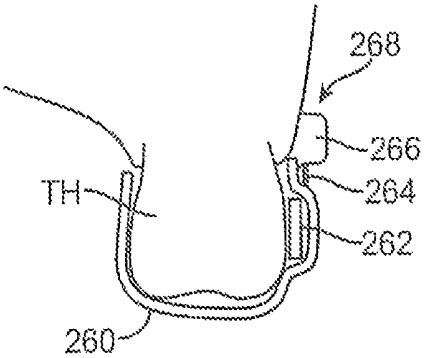

FIG. 25B

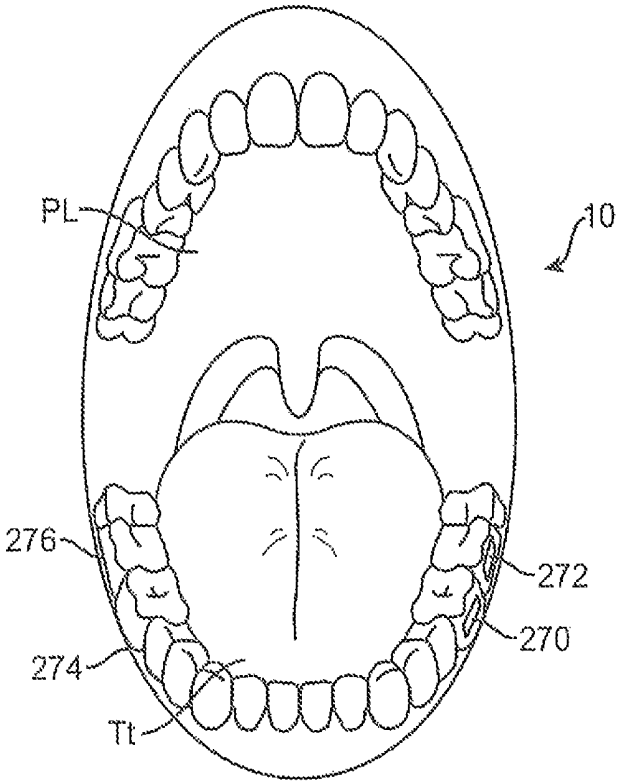

FIG. 26

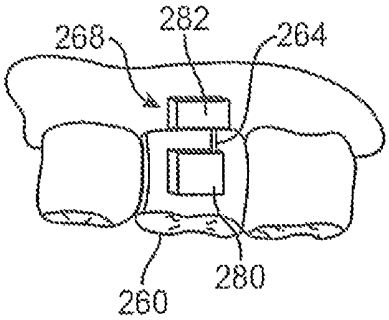

FIG. 27A

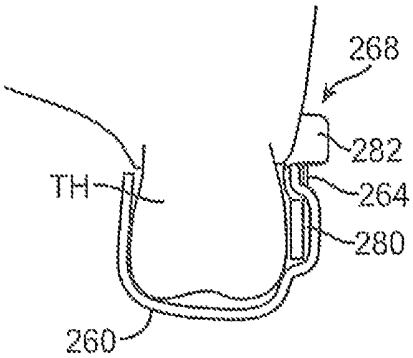

FIG. 27B

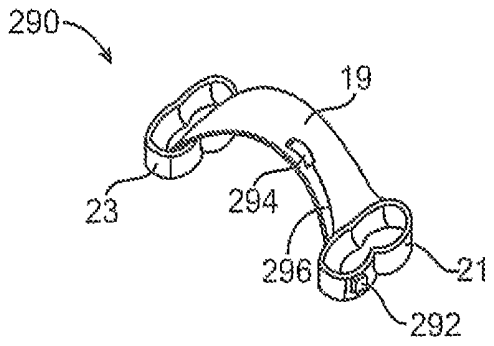

FIG. 28

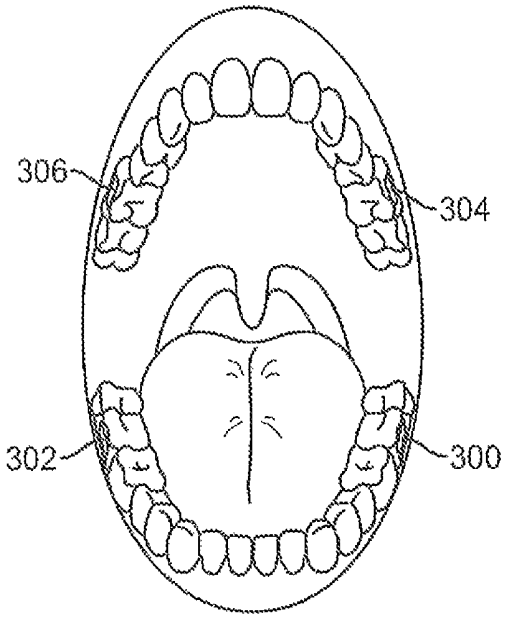

FIG. 29

SYSTEMS AND METHODS TO PROVIDE TWO-WAY COMMUNICATIONS

BACKGROUND

Traditionally field workers such as fire fighters and plant workers communicate using two way radios such as radios supplied by Motorola, Inc. As mentioned in United States Patent 20070142072, two way radios allow users the ability to wirelessly communicate with others on a small network. Most two way radios use various channels or frequencies for communication. Monitoring of more than one channel allows a user to communicate with a plurality of people for a variety of purposes. In a security environment, for instance, channel 1 may be used to communicate about and monitor emergency conditions. Channel 2 may be used to communicate about and monitor major security threats. Channel 3 may be used to communicate about and monitor minor security threats. A user may monitor all three channels by using a two way radio having a scanning mode. However, the user is limited to transmitting on the most recently scanned channel. If the user fails to transmit within a short predetermined period of time, the two way radio may scan to a new channel. The user then needs to manually select the channel, wasting valuable time and eliminating the ability to scan other channels during the selection process.

Other devices that can be used instead of two way radios include cellular telephones. These devices have revolutionized personal communication by allowing telephone access from anywhere within reach of wireless network infrastructure (e.g., cellular networks, communication satellites, or other infrastructure of other wireless networks adapted for voice communications). In as much as the use of handheld wireless voice communication devices is not restricted to homes and offices, such devices will often be used in environments where there is considerable ambient noise. Examples of such environments include busy urban settings, inside moving vehicles and on factory floors. Ambient noise in an environment can degrade the intelligibility of received voice audio and thereby interfere with users' ability to communicate.

United States Patent 20060270467 discusses enhancing the intelligibility of speech emitted into a noisy environment by filtering ambient noise with a filter that simulates the physical blocking of noise by at least a part of a voice communication device and determining a frequency dependent SNR of received voice audio relative to ambient noise is computed on a perceptual (e.g. Bark) frequency scale. Formants are identified and the SNR in bands including certain formants are modified with formant enhancement gain factors in order to improve intelligibility. However, in certain industrial, emergency, government and military applications, such noise filtering is insufficient to provide high quality, hands-free, yet inconspicuous communication capability for field personnel.

SUMMARY

Methods and apparatus that support communications and/or medical information monitoring for field personnel are disclosed. In one embodiment, a device provides an electronic and transducer device that can be attached, adhered, or otherwise embedded into or upon a removable oral appliance or other oral device to form a two-way communication assembly.

In another embodiment, the device provides an electronic and transducer device that can be attached, adhered, or otherwise embedded into or upon a removable oral appliance or other oral device to form a medical tag containing patient identifiable information. Such an oral appliance may be a custom-made device fabricated from a thermal forming process utilizing a replicate model of a dental structure obtained by conventional dental impression and/or imaging methods. The electronic and transducer assembly may receive incoming sounds either directly or through a receiver to process and amplify the signals and transmit the processed sounds via a vibrating transducer element coupled to a tooth or other bone structure, such as the maxillary, mandibular, or palatine bone structure.

Advantages of preferred embodiments may include one or more of the following. The system is a multi-purpose communication platform that is rugged, wireless and secure. The system provides quality, hands-free, yet inconspicuous communication capability for field personnel. In embodiments that support voice and data from the field, the system automates the capture and transfer of data in the field to a central remote computer for further processing. By minimizing human data collection, the system reduces paperwork, allows for the collection of more complete field information, eliminates redundant data entry, and increases responsiveness to fluid situations present in industrial environment or emergency, local government or military incidents.

For applications that require health monitoring, the system enables healthcare providers to make certain all patient episodes are captured and recorded no matter the environment. Most importantly; the system provides a standard of care to field personnel by providing access to previously unavailable information. For military and emergency applications, the system provides commanders with real time visibility of their readiness status and provides support for medical command and control, telemedicine and medical informatics applications across the continuum of the spectrum of military medical operations but especially for the first responder and far forward medical facilities. With soldiers deployed in many different parts of the world, the system allows medical professionals to capture patient episodes anywhere, anytime, and ensure complete patient information is recorded and transferred to the soldier's medical records at home. Additionally, the system provides a dental identification capability which is retained on the individual and thus is less subject to destruction, loss, forgetfulness, or any of numerous other problems.

BRIEF DESCRIPTION OF THE DRAWINGS

FIGS. **1A-1C** shows exemplary two way communication devices.

FIG. **1D** illustrates the dentition of a patient's teeth and one variation of a two-way communication device which is removably placed upon or against the patient's tooth or teeth as a removable oral appliance.

FIG. **2A** illustrates a perspective view of the lower teeth showing one exemplary location for placement of the removable oral appliance two-way communication device.

FIG. **2B** illustrates another variation of the removable oral appliance in the form of an appliance which is placed over an entire row of teeth in the manner of a mouthguard.

FIG. **2C** illustrates another variation of the removable oral appliance which is supported by an arch.

FIG. **2D** illustrates another variation of an oral appliance configured as a mouthguard.

FIG. **3** illustrates a detail perspective view of the oral appliance positioned upon the patient's teeth utilizable in

combination with a transmitting assembly external to the mouth and wearable by the patient in another variation of the device.

FIG. **4** shows an illustrative configuration of the individual components in a variation of the oral appliance device having an external transmitting assembly with a receiving and transducer assembly within the mouth.

FIG. **5** shows an illustrative configuration of another variation of the device in which the entire assembly is contained by the oral appliance within the user's mouth.

FIG. **6**A shows a partial cross-sectional view of an oral appliance placed upon a tooth with an electronics/transducer assembly adhered to the tooth surface via an adhesive.

FIG. **6**B shows a partial cross-sectional view of a removable backing adhered onto an adhesive surface.

FIG. **7** shows a partial cross-sectional view of another variation of an oral appliance placed upon a tooth with an electronics/transducer assembly pressed against the tooth surface via an osmotic pouch.

FIG. **8** shows a partial cross-sectional view of another variation of an oral appliance placed upon a tooth with an electronics/transducer assembly pressed against the tooth surface via one or more biasing elements.

FIG. **9** illustrates another variation of an oral appliance having an electronics assembly and a transducer assembly separated from one another within the electronics and transducer housing of the oral appliance.

FIGS. **10** and **11** illustrate additional variations of oral appliances in which the electronics and transducer assembly are maintainable against the tooth surface via a ramped surface and a biasing element.

FIG. **12** shows yet another variation of an oral appliance having an interfacing member positioned between the electronics and/or transducer assembly and the tooth surface.

FIG. **13** shows yet another variation of an oral appliance having an actuatable mechanism for urging the electronics and/or transducer assembly against the tooth surface.

FIG. **14** shows yet another variation of an oral appliance having a cam mechanism for urging the electronics and/or transducer assembly against the tooth surface.

FIG. **15** shows yet another variation of an oral appliance having a separate transducer mechanism positionable upon the occlusal surface of the tooth for transmitting vibrations.

FIG. **16** illustrates another variation of an oral appliance having a mechanism for urging the electronics and/or transducer assembly against the tooth surface utilizing a bite-actuated mechanism.

FIG. **17** shows yet another variation of an oral appliance having a composite dental anchor for coupling the transducer to the tooth.

FIGS. **18**A and **18**B show side and top views, respectively, of an oral appliance variation having one or more transducers which may be positioned over the occlusal surface of the tooth.

FIGS. **19**A and **19**B illustrate yet another variation of an oral appliance made from a shape memory material in its pre-formed relaxed configuration and its deformed configuration when placed over or upon the patient's tooth, respectively, to create an interference fit.

FIG. **20** illustrates yet another variation of an oral appliance made from a pre-formed material in which the transducer may be positioned between the biased side of the oral appliance and the tooth surface.

FIG. **21** illustrates a variation in which the oral appliance may be omitted and the electronics and/or transducer assembly may be attached to a composite dental anchor attached directly to the tooth surface.

FIGS. **22**A and **22**B show partial cross-sectional side and perspective views, respectively, of another variation of an oral appliance assembly having its occlusal surface removed or omitted for patient comfort.

FIGS. **23**A and **23**B illustrate perspective and side views, respectively, of an oral appliance which may be coupled to a screw or post implanted directly into the underlying bone, such as the maxillary or mandibular bone.

FIG. **24** illustrates another variation in which the oral appliance may be coupled to a screw or post implanted directly into the palate of a patient.

FIGS. **25**A and **25**B illustrate perspective and side views, respectively, of an oral appliance which may have its transducer assembly or a coupling member attached to the gingival surface to conduct vibrations through the gingival tissue and underlying bone.

FIG. **26** illustrates an example of how multiple oral appliance two-way communication assemblies or transducers may be placed on multiple teeth throughout the patient's mouth.

FIGS. **27**A and **27**B illustrate perspective and side views, respectively, of an oral appliance (similar to a variation shown above) which may have a microphone unit positioned adjacent to or upon the gingival surface to physically separate the microphone from the transducer to attenuate or eliminate feedback.

FIG. **28** illustrates another variation of a removable oral appliance supported by an arch and having a microphone unit integrated within the arch.

FIG. **29** shows yet another variation illustrating at least one microphone and optionally additional microphone units positioned around the user's mouth and in wireless communication with the electronics and/or transducer assembly.

DESCRIPTION

As shown in the embodiment of FIG. **1**A, a two way communication system **1** includes a mouth wearable communicator **6**, one or more body sensors **2**, and a linking unit **3** coupled to the mouth wearable communicator and the one or more body sensors, the linking unit adapted to communicate with a remote station. The mouth wearable communicator can include a bone conduction hearing system to transmit sound to the user, and the communicator can have an embedded microphone to pick up sound. The mouth wearable communicator can be a custom oral device. One or more medical sensors can be embedded therein to pick up vital sign information. Alternatively, environmental sensors such as room temperature sensors can be used to sense parameters from the environment and/or the room, for example. Vital sign can include certain body physiological signal measurements while environmental signals may be of interest in fire fighting and other similar cases. The environment temperature sensor can be provided in the linking unit **3** or other devices attached or close to body. Also there are some other signals beside listed that can be picked from linking unit **3** or even the mouth wearable communicator **6** that may be of great value. For example "Location (using GPS or cell phone signals or equivalent method)", "Speed", "Acceleration", "Shock", "Smoke", "Light", "Infra Red", "Radiation" and "Wind Speed" can help identify the location of a Fire Fighter or Miner, and to assess if he or she is at risk. The mouth wearable communicator can provide a data storage device such as a solid state memory or a flash storage device. The content of the the data storage device can be encrypted for security. A local transceiver can connect the mouth wearable communicator **6** with the one or more body sensors **2** and the linking unit **3**. The local transceiver can transmit encrypted data for

secure transmission if desired. A wireless local area network (LAN) or a wired LAN can support communications among the mouth wearable communicator **6** with the one or more body sensors **2** and the linking unit **3**. The LAN forms a body link among sensors **2**, mouth piece **1** and the linking unit or device **3**. The linking unit **3** can communicate over a wide area network (WAN) to the remote station **5**. The remote station can be a satellite, a cellular tower, a relay station mounted on an airplane or a helicopter, or a relay station mounted on a blimp, among others.

A beacon **4** can be positioned on the user's body and communicate with the mouth wearable communicator **6** to identify that the user is in need of assistance. The beacon **4** can provide an audible signal, a location signal, a visible signal to request assistance. The beacon **4** can be affixed to a first responder's uniform and can be activated if the user's vital signs indicate he/she has been hurt and can help to locate them in a smoky environment.

The two way communication device can use the body sensor **2** to sense a vital sign or a measured parameter such as environment temperature, among others. The vital sign can include body temperature, hydration, heart rate, EKG, EEG, pulse rate, oxygen saturation, respiratory cycle, air flow velocity, potential of hydrogen (pH) level, for example. The measured parameter can include environment temperature. The sensor can be positioned in the linking unit **3** or other devices attached or close to body. Also other measured parameter signals that can be picked from the linking unit **3** or the mouth piece **6** that may be of value, including "Location (using GPS or cell phone signals or equivalent method)", "Speed", "Acceleration", "Shock", "Smoke", "Light", "Infra Red", "Radiation" and "Wind Speed." The measure parameters can help identify the location of a Fire Fighter or Miner, and to assess if he or she is at risk, for example. The body sensor **2** can also include an activity monitor. For instance accelerometers can monitor whether the subject is moving, walking or running and relay the information to the remote station **5**.

The two way communication device can have a microphone to pick up sound. The microphone can be an intraoral microphone or an extraoral microphone. In one embodiment, the microphone cancels environmental noise and transmits a user's voice to the remote station. This embodiment provides the ability to cancel environmental noises while transmitting subject's own voice to the remote station **5** such as a call center. As the microphone is in a fixed location (compared to ordinary wireless communication devices) and very close to user's own voice, the system can handle environmental noise reduction that is important in working in high noise areas. As such, the two way communication device can be used by workers in loud environments such as a professional entertainer or athlete and/or support personnel, a soldier, a medic, a fireman, an emergency worker, among others.

The two way communication device can provide a wireless sensor network that communicates with the mouth wearable communicator **6**, the one or more body sensors **2**, and the linking unit **3**. In other embodiments, the linking unit **3** wirelessly communicates with other linking units of other users to form a wireless local area network for detection, identification and communication with a crew.

In one embodiment, the mouth wearable communicator **6** has a housing having a shape which is conformable to at least a portion of at least one tooth; an actuatable transducer disposed within or upon the housing and in vibratory communication with a surface of the at least one tooth; and a wireless communication transceiver coupled to the transducer to provide received sound to the user and to provide communication for the user. The two way communication device can be an oral appliance having a shape which conforms to the at least one tooth. An electronic assembly can be disposed within or upon the housing and which is in communication with the transducer.

In another aspect, a method for providing two way communication includes intraorally wearing a mouth wearable communicator; sensing one or more body parameters or environmental parameters; and linking to the mouth wearable communicator and the one or more body sensors to a remote station.

Implementations of the above method can include one or more of the following. The system can transmit sound using a bone conduction device. The mouth wearable communicator can be a custom oral device. The system can embed one or more sensors in the mouth wearable communicator. The system can store medical or environmental data in the mouth wearable communicator. For emergency or military users that may face danger, the system can store data in the mouth wearable communicator as a secured black box device for subsequent forensic analysis.

Turning now to FIGS. **1**B-**1**C, exemplary usage scenarios are shown. As shown in FIG. **1**B, an industrial user is shown using the two way communication device. As shown in FIG. **1**C, an exemplary two way communication device and/or medical monitoring device **1** is shown for military applications. In one embodiment, the device **1** provides an electronic and transducer device that can be attached, adhered, or otherwise embedded into or upon a removable oral appliance or other oral device to form a two-way communication assembly. As shown in FIGS. **1**B-**1**C, the device can be used by emergency and security personnel, medical personnel, municipal workers, industrial plant workers, individuals in loud environments that require communications (musicians, athletes and their support personnel), and the military, among others.

In another embodiment, the device **1** provides an electronic and transducer device **4** that can be attached, adhered, or otherwise embedded into or upon a removable oral appliance or other oral device to form a medical tag containing patient identifiable information. Such an oral appliance may be a custom-made device fabricated from a thermal forming process utilizing a replicate model of a dental structure obtained by conventional dental impression methods. The electronic and transducer assembly may receive incoming sounds either directly or through a receiver to process and amplify the signals and transmit the processed sounds via a vibrating transducer element coupled to a tooth or other bone structure, such as the maxillary, mandibular, or palatine bone structure.

The device **1** can include sensors that detect chemicals present in the user's saliva and provide medical information on the user. The device **1** can also sense heart rate, EKG, and other bio-signals that can be picked up within the mouth. Additionally, the device **1** can communicate with a medical data collection module **2** that can collect vital signs such as temperature, heart rate, EKG, respiration rate, and other vital signs or medical information. The device **1** can communicate with the module **2** through various short range radios such as a Bluetooth radio, for example.

The device **1** can also communicate through a long range transceiver such as a short-wave transceiver, a cellular telephone transceiver, or a satellite transceiver **3**. Such transceivers can be provided within the device **1**, or alternatively, can be body worn. In the embodiment of FIG. **1**, a cellular or satellite transceiver **3** is positioned on a belt worn by the user.

The transceiver **3** communicates with the other devices on the user's body through the short range radio such as Bluetooth, for example.

An exemplary process to collect medical information from the user (such as fire fighting personnel) and for supporting bone-conduction two way communication can be as follows:

- Periodically collect vital sign and other medical information
- Check to see if the user is using the long range transceiver for talking
- If long range transceiver is not used for talking, upload medical history of the user to a remote computer over the long range transceiver
- Remote computer detects if the medical data falls outside of an acceptable range that requires medical intervention
- Alarm sound is generated to the user alerting him/her that there is a potential problem and that he/she should contact Command post
- If medical intervention is required, the remote computer alerts the user's commander for action to assist the user
- Self-help instructions can be sent through the transceiver **3** to the bone conduction communication device **1**

In one embodiment, the medical data would include user identification, triage status, condition, and treatment. The data would be routed via a cellular transceiver or a satellite transceiver to a Command Post where it is processed, stored, relayed to the Internet, and moved back to devices on the field. As a result, data on casualties would be accessible immediately for operational use by other users, medics, responders, incident commanders and even receiving hospitals that can help the user. Real-time information regarding victims and their status is critical to the overall management of field medical care. Medical command can then coordinate timely information on the number of casualties and their needs with the known availability of resources, such as on-scene providers, ambulance locations, and area hospital capacities. Real-time information is also provided for determining the appropriate patient destination, depending on the type of injuries and the capabilities of the receiving facilities.

An exemplary process to collect work information from a plant or site and for supporting bone-conduction two way communication with the worker can be as follows:

- Periodically collect plant or industrial parameters
- Check to see if the user is using the long range transceiver for talking
- If long range transceiver is not used for talking, upload the industrial parameters collected by the user to a remote computer over the long range transceiver
- Remote computer detects if the collected data falls outside of an acceptable range that requires intervention
- If intervention is required, the remote computer alerts the user's supervisor for action and also activate a beacon mounted on the user to help identify his/her location in case of smoke or other issues that could hamper visibility
- Corrective instructions can be sent through the transceiver to the bone conduction communication device **1** so that user can fix problem at the site

In another embodiment for military use, the remote computer can support a BATTLEFIELD MEDICAL INFORMATION SYSTEMS TACTICAL-JOINT (BMIST-J) for enabling military providers to record, store, retrieve and transfer medical records to the DoD's Clinical Data Repository by synchronizing the received data. The system supports digital versions of the DD 1380 (field medical card) and SF 600 (chronological medical record of care). Diagnostic and treatment decision aids are provided by the system. The data captured by the device **1** is also Personal Information Carrier (PIC) compatible. The system provides a secure, legible, electronic records of battlefield treatments, contributes to a comprehensive, life-long medical history, and facilitates medical surveillance. This device can also help medical personnel to triage soldiers more effectively by noting vital signs and ranking accordingly.

Turning now to more details on the device **1**, as shown in FIG. **1**D, a patient's mouth and dentition **10** is illustrated showing one possible location for removably attaching two-way communication assembly **14** upon or against at least one tooth, such as a molar **12**. The patient's tongue TG and palate PL are also illustrated for reference. An electronics and/or transducer assembly **16** may be attached, adhered, or otherwise embedded into or upon the assembly **14**, as described below in further detail.

FIG. **2**A shows a perspective view of the patient's lower dentition illustrating the two-way communication assembly **14** comprising a removable oral appliance **18** and the electronics and/or transducer assembly **16** positioned along a side surface of the assembly **14**. In this variation, oral appliance **18** may be fitted upon two molars **12** within tooth engaging channel **20** defined by oral appliance **18** for stability upon the patient's teeth, although in other variations, a single molar or tooth may be utilized. Alternatively, more than two molars may be utilized for the oral appliance **18** to be attached upon or over. Moreover, electronics and/or transducer assembly **16** is shown positioned upon a side surface of oral appliance **18** such that the assembly **16** is aligned along a buccal surface of the tooth **12**; however, other surfaces such as the lingual surface of the tooth **12** and other positions may also be utilized. The figures are illustrative of variations and are not intended to be limiting; accordingly, other configurations and shapes for oral appliance **18** are intended to be included herein.

FIG. **2**B shows another variation of a removable oral appliance in the form of an appliance **15** which is placed over an entire row of teeth in the manner of a mouthguard. In this variation, appliance **15** may be configured to cover an entire bottom row of teeth or alternatively an entire upper row of teeth. In additional variations, rather than covering the entire rows of teeth, a majority of the row of teeth may be instead be covered by appliance **15**. Assembly **16** may be positioned along one or more portions of the oral appliance **15**.

FIG. **2**C shows yet another variation of an oral appliance **17** having an arched configuration. In this appliance, one or more tooth retaining portions **21**, **23**, which in this variation may be placed along the upper row of teeth, may be supported by an arch **19** which may lie adjacent or along the palate of the user. As shown, electronics and/or transducer assembly **16** may be positioned along one or more portions of the tooth retaining portions **21**, **23**. Moreover, although the variation shown illustrates an arch **19** which may cover only a portion of the palate of the user, other variations may be configured to have an arch which covers the entire palate of the user.

FIG. **2**D illustrates yet another variation of an oral appliance in the form of a mouthguard or retainer **25** which may be inserted and removed easily from the user's mouth. Such a mouthguard or retainer **25** may be used in sports where conventional mouthguards are worn; however, mouthguard or retainer **25** having assembly **16** integrated therein may be utilized by persons, hearing impaired or otherwise, who may simply hold the mouthguard or retainer **25** via grooves or channels **26** between their teeth for receiving instructions remotely and communicating over a distance.

Generally, the volume of electronics and/or transducer assembly **16** may be minimized so as to be unobtrusive and as

comfortable to the user when placed in the mouth. Although the size may be varied, a volume of assembly **16** may be less than 800 cubic millimeters. This volume is, of course, illustrative and not limiting as size and volume of assembly **16** and may be varied accordingly between different users.

Moreover, removable oral appliance **18** may be fabricated from various polymeric or a combination of polymeric and metallic materials using any number of methods, such as computer-aided, machining processes using computer numerical control (CNC) systems or three-dimensional printing processes, e.g., stereolithography apparatus (SLA), selective laser sintering (SLS), and/or other similar processes utilizing three-dimensional geometry of the patient's dentition, which may be obtained via any number of techniques. Such techniques may include use of scanned dentition using intraoral scanners such as laser, white light, ultrasound, mechanical three-dimensional touch scanners, magnetic resonance imaging (MRI), computed tomography (CT), other optical methods, etc.

In forming the removable oral appliance **18**, the appliance **18** may be optionally formed such that it is molded to fit over the dentition and at least a portion of the adjacent gingival tissue to inhibit the entry of food, fluids, and other debris into the oral appliance **18** and between the transducer assembly and tooth surface. Moreover, the greater surface area of the oral appliance **18** may facilitate the placement and configuration of the assembly **16** onto the appliance **18**.

Additionally, the removable oral appliance **18** may be optionally fabricated to have a shrinkage factor such that when placed onto the dentition, oral appliance **18** may be configured to securely grab onto the tooth or teeth as the appliance **18** may have a resulting size slightly smaller than the scanned tooth or teeth upon which the appliance **18** was formed. The fitting may result in a secure interference fit between the appliance **18** and underlying dentition.

In one variation, with assembly **14** positioned upon the teeth, as shown in FIG. **3**, an extra-buccal transmitter assembly **22** located outside the patient's mouth may be utilized to receive auditory signals for processing and transmission via a wireless signal **24** to the electronics and/or transducer assembly **16** positioned within the patient's mouth, which may then process and transmit the processed auditory signals via vibratory conductance to the underlying tooth and consequently to the patient's inner ear.

The transmitter assembly **22**, as described in further detail below, may contain a microphone assembly as well as a transmitter assembly and may be configured in any number of shapes and forms worn by the user, such as a watch, necklace, lapel, phone, belt-mounted device, etc.

FIG. **4** illustrates a schematic representation of one variation of two-way communication assembly **14** utilizing an extra-buccal transmitter assembly **22**, which may generally comprise microphone **30** for receiving sounds and which is electrically connected to processor **32** for processing the auditory signals. Processor **32** may be connected electrically to transmitter **34** for transmitting the processed signals to the electronics and/or transducer assembly **16** disposed upon or adjacent to the user's teeth. The microphone **30** and processor **32** may be configured to detect and process auditory signals in any practicable range, but may be configured in one variation to detect auditory signals ranging from, e.g., 250 Hertz to 20,000 Hertz.

With respect to microphone **30**, a variety of various microphone systems may be utilized. For instance, microphone **30** may be a digital, analog, and/or directional type microphone. Such various types of microphones may be interchangeably configured to be utilized with the assembly, if so desired.

Power supply **36** may be connected to each of the components in transmitter assembly **22** to provide power thereto. The transmitter signals **24** may be in any wireless form utilizing, e.g., radio frequency, ultrasound, microwave, Blue Tooth® (BLUETOOTH SIG, INC., Bellevue, Wash.), etc. for transmission to assembly **16**. Assembly **22** may also optionally include one or more input controls **28** that a user may manipulate to adjust various acoustic parameters of the electronics and/or transducer assembly **16**, such as acoustic focusing, volume control, filtration, muting, frequency optimization, sound adjustments, and tone adjustments, etc.

The signals transmitted **24** by transmitter **34** may be received by electronics and/or transducer assembly **16** via receiver **38**, which may be connected to an internal processor for additional processing of the received signals. The received signals may be communicated to transducer **40**, which may vibrate correspondingly against a surface of the tooth to conduct the vibratory signals through the tooth and bone and subsequently to the middle ear to facilitate hearing of the user. Transducer **40** may be configured as any number of different vibratory mechanisms. For instance, in one variation, transducer **40** may be an electromagnetically actuated transducer. In other variations, transducer **40** may be in the form of a piezoelectric crystal having a range of vibratory frequencies, e.g., between 250 to 4000 Hz.

Power supply **42** may also be included with assembly **16** to provide power to the receiver, transducer, and/or processor, if also included. Although power supply **42** may be a simple battery, replaceable or permanent, other variations may include a power supply **42** which is charged by inductance via an external charger. Additionally, power supply **42** may alternatively be charged via direct, coupling to an alternating current (AC) or direct current (DC) source. Other variations may include a power supply **42** which is charged via a mechanical mechanism, such as an internal pendulum or slidable electrical inductance charger as known in the art, which is actuated via, e.g., motions of the jaw and/or movement for translating the mechanical motion into stored electrical energy for charging power supply **42**.

In another variation of assembly **16**, rather than utilizing an extra-buccal transmitter, two-way communication assembly **50** may be configured as an independent assembly contained entirely within the user's mouth, as shown in FIG. **5**. Accordingly, assembly **50** may include an internal microphone **52** in communication with an on-board processor **54**. Internal microphone **52** may comprise any number of different types of microphones, as described above. Processor **54** may be used to process any received auditory signals for filtering and/or amplifying the signals and transmitting them to transducer **56**, which is in vibratory contact against the tooth surface. Power supply **58**, as described above, may also be included within assembly **50** for providing power to each of the components of assembly **50** as necessary.

In order to transmit the vibrations corresponding to the received auditory signals efficiently and with minimal loss to the tooth or teeth, secure mechanical contact between the transducer and the tooth is ideally maintained to ensure efficient vibratory communication. Accordingly, any number of mechanisms may be utilized to maintain this vibratory communication.

In one variation as shown in FIG. **6**A, a partial cross-sectional view of a removable oral appliance **60** is shown placed over or upon a tooth TH. Electronics and/or transducer housing **62** may be seen defined along oral appliance **60** such that housing **62** is aligned or positioned adjacent to a side surface, buccal and/or lingual surface, of the tooth TH. Hous-

ing **62** may provide protection to the electronics and/or transducer assembly from the environment of the mouth.

An electronics and/or transducer assembly **64** may be simply placed, embedded, or encapsulated within housing **62** for contacting the tooth surface. In this variation, assembly **64** may be adhered against the tooth surface via an adhesive surface or film **66** such that contact is maintained between the two. As shown in FIG. **6**B, a removable backing **68** may be adhered onto adhesive surface **66** and removed prior to placement upon the tooth surface. In this manner, assembly **64** may be replaced upon the tooth as necessary with additional electronics and/or transducer assemblies.

Aside from an adhesive film **66**, another alternative may utilize an expandable or swellable member to ensure a secure mechanical contact of the transducer against the tooth. As shown in FIG. **7**, an osmotic patch or expandable hydrogel **74** may be placed between housing **62** and electronics and/or transducer assembly **72**. After placement of oral appliance **60**, hydrogel **74** may absorb some fluids, either from any surrounding fluid or from a fluid introduced into hydrogel **74**, such that hydrogel **74** expands in size to force assembly **72** into contact against the tooth surface. Assembly **72** may be configured to define a contact surface **70** having a relatively smaller contact area to facilitate uniform contact of the surface **70** against the tooth. Such a contact surface **70** may be included in any of the variations described herein. Additionally, a thin encapsulating layer or surface **76** may be placed over housing **62** between contact surface **70** and the underlying tooth to prevent any debris or additional fluids from entering housing **62**.

Another variation is shown in FIG. **8**, which shows electronics and/or transducer assembly **80** contained within housing **62**. In this variation, one or more biasing elements **82**, e.g., springs, pre-formed shape memory elements, etc., may be placed between assembly **80** and housing **62** to provide a pressing force on assembly **80** to urge the device against the underlying tooth surface, thereby ensuring mechanical contact.

In yet another variation, the electronics may be contained as a separate assembly **90** which is encapsulated within housing **62** and the transducer **92** may be maintained separately from assembly **90** but also within housing **62**. As shown in FIG. **9**, transducer **92** may be urged against the tooth surface via a spring or other biasing element **94** and actuated via any of the mechanisms described above.

In other variations as shown in FIG. **10**, electronics and/or transducer assembly **100** may be configured to have a ramped surface **102** in apposition to the tooth surface. The surface **102** may be angled away from the occlusal surface of the tooth. The assembly **100** may be urged via a biasing element or spring **106** which forces the ramped surface **102** to pivot about a location **104** into contact against the tooth to ensure contact for the transducer against the tooth surface.

FIG. **11** illustrates another similar variation in electronics and/or transducer assembly **110** also having a ramped surface **112** in apposition to the tooth surface. In this variation, the ramped surface **112** may be angled towards the occlusal surface of the tooth. Likewise, assembly **110** may be urged via a biasing element or spring **116** which urges the assembly **110** to pivot about its lower end such that the assembly **110** contacts the tooth surface at a region **114**.

In yet another variation shown in FIG. **12**, electronics and/or transducer assembly **120** may be positioned within housing **62** with an interface layer **122** positioned between the assembly **120** and the tooth surface. Interface layer **122** may be configured to conform against the tooth surface and against assembly **120** such that vibrations may be transmitted through layer **122** and to the tooth in a uniform manner. Accordingly, interface layer **122** may be made from a material which attenuates vibrations minimally. Interface layer **122** may be made in a variety of forms, such as a simple insert, an O-ring configuration, etc. or even in a gel or paste form, such as denture or oral paste, etc. Additionally, layer **122** may be fabricated from various materials, e.g., hard plastics or polymeric materials, metals, etc.

FIG. **13** illustrates yet another variation in which electronics and/or transducer assembly **130** may be urged against the tooth surface via a mechanical mechanism. As shown, assembly **130** may be attached to a structural member **132**, e.g., a threaded member or a simple shaft, which is connected through housing **62** to an engagement member **134** located outside housing **62**. The user may rotate engagement member **134** (as indicated by rotational arrow **136**) or simply push upon member **134** (as indicated by linear arrow **138**) to urge assembly **130** into contact against the tooth. Moreover, actuation of engagement member **134** may be accomplished manually within the mouth or through the user's cheek or even through manipulation via the user's tongue against engagement member **134**.

Another variation for a mechanical mechanism is illustrated in FIG. **14**. In this variation, electronics and/or transducer assembly **140** may define a portion as an engaging surface **142** for contacting against a cam or lever mechanism **144**. Cam or lever mechanism **144** may be configured to pivot **146** such that actuation of a lever **148** extending through housing **62** may urge cam or lever mechanism **144** to push against engaging surface **142** such that assembly **140** is pressed against the underlying tooth surface.

In yet another variation, the electronics **150** and the transducer **152** may be separated from one another such that electronics **150** remain disposed within housing **62** but transducer **152**, connected via wire **154**, is located beneath dental oral appliance **60** along an occlusal surface of the tooth, as shown in FIG. **15**. In such a configuration, vibrations are transmitted via the transducer **152** through the occlusal surface of the tooth. Additionally, the user may bite down upon the oral appliance **60** and transducer **152** to mechanically compress the transducer **152** against the occlusal surface to further enhance the mechanical contact between the transducer **152** and underlying tooth to further facilitate transmission therethrough.

In the variation of FIG. **16**, another example for a bite-enhanced coupling mechanism is illustrated where electronics and/or transducer assembly **160** defines an angled interface surface **162** in apposition to a correspondingly angled engaging member **164**. A proximal end of engaging member **164** may extend through housing **62** and terminate in a pusher member **166** positioned over an occlusal surface of the tooth TH. Once oral appliance **68** is initially placed over tooth TH, the user may bite down or otherwise press down upon the top portion of oral appliance **60**, thereby pressing down upon pusher member **166** which in turn pushes down upon engaging member **164**, as indicated by the arrow. As engaging member **164** is urged downwardly towards the gums, its angled surface may push upon the corresponding and oppositely angled surface **162** to urge assembly **160** against the tooth surface and into a secure mechanical contact.

In yet another variation, an electronics and/or transducer assembly **170** may define a channel or groove **172** along a surface for engaging a corresponding dental anchor **174**, as shown in FIG. **17**. Dental anchor **174** may comprise a light-curable acrylate-based composite material adhered directly to the tooth surface. Moreover dental anchor **174** may be configured in a shape which corresponds to a shape of channel or

groove **172** such that the two may be interfitted in a mating engagement. In this manner, the transducer in assembly **170** may vibrate directly against dental anchor **174** which may then transmit these signals directly into the tooth TH.

FIGS. **18**A and **18**B show partial cross-sectional side and top views, respectively, of another variation in which oral appliance **180** may define a number of channels or grooves **184** along a top portion of oral appliance **180**. Within these channels or grooves **184**, one or more transducers **182**, **186**, **188**, **190** may be disposed such that they are in contact with the occlusal surface of the tooth and each of these transducers may be tuned to transmit frequencies uniformly. Alternatively, each of these transducers may be tuned to transmit only at specified frequency ranges. Accordingly, each transducer can be programmed or preset for a different frequency response such that each transducer may be optimized for a different frequency response and/or transmission to deliver a relatively high-fidelity sound to the user.

In yet another variation, FIGS. **19**A and **19**B illustrate an oral appliance **200** which may be pre-formed from a shape memory polymer or alloy or a superelastic material such as a Nickel-Titanium alloy, e.g., Nitinol. FIG. **19**A shows oral appliance **200** in a first configuration where members **202**, **204** are in an unbiased memory configuration. When placed upon or against the tooth TH, members **202**, **204** may be deflected into a second configuration where members **202'**, **204'** are deformed to engage tooth TH in a secure interference fit, as shown in FIG. **19**B. The biased member **204'** may be utilized to press the electronics and/or transducer assembly contained therein against the tooth surface as well as to maintain securement of the oral appliance **200** upon the tooth TH.

Similarly, as shown in FIG. **20**, removable oral appliance **210** may have biased members to secure engage the tooth TH, as above. In this variation, the ends of the members **212**, **214** may be configured into curved portions under which a transducer element **218** coupled to electronics assembly **216** may be wedged or otherwise secured to ensure mechanical contact against the tooth surface.

FIG. **21** shows yet another variation in which the oral appliance is omitted entirely. Here, a composite dental anchor or bracket **226**, as described above, may be adhered directly onto the tooth surface. Alternatively, bracket **226** may be comprised of a biocompatible material e.g., stainless steel, Nickel-Titanium, Nickel, ceramics, composites, etc., formed into a bracket and anchored onto the tooth surface. The bracket **226** may be configured to have a shape **228** over which an electronics and/or transducer assembly **220** may be slid over or upon via a channel **222** having a corresponding receiving configuration **224** for engagement with bracket **226**. In this manner, assembly **220** may be directly engaged against bracket **226**, through which a transducer may directly vibrate into the underlying tooth TH. Additionally, in the event that assembly **220** is removed from the tooth TH, assembly **220** may be simply slid or rotated off bracket **226** and a replacement assembly may be put in its place upon bracket **226**.

FIGS. **22**A and **22**B show partial cross-sectional side and perspective views, respectively, of yet another variation of an oral appliance **230**. In this variation, the oral appliance **230** may be configured to omit an occlusal surface portion of the oral appliance **230** and instead engages the side surfaces of the tooth TH, such as the lingual and buccal surfaces only. The electronics and/or transducer assembly **234** may be contained, as above, within a housing **232** for contact against the tooth surface. Additionally, as shown in FIG. **22**B, one or more optional cross-members **236** may connect the side portions of the oral appliance **230** to provide some structural stability when placed upon the tooth. This variation may define an occlusal surface opening **238** such that when placed upon the tooth, the user may freely bite down directly upon the natural occlusal surface of the tooth unobstructed by the oral appliance device, thereby providing for enhanced comfort to the user.

In yet other variations, vibrations may be transmitted directly into the underlying bone or tissue structures rather than transmitting directly through the tooth or teeth of the user. As shown in FIG. **23**A, an oral appliance **240** is illustrated positioned upon the user's tooth, in this example upon a molar located along the upper row of teeth. The electronics and/or transducer assembly **242** is shown as being located along the buccal surface of the tooth. Rather than utilizing a transducer in contact with the tooth surface, a conduction transmission member **244**, such as a rigid or solid metallic member, may be coupled to the transducer in assembly **242** and extend from oral appliance **240** to a post or screw **246** which is implanted directly into the underlying bone **248**, such as the maxillary bone, as shown in the partial cross-sectional view of FIG. **23**B. As the distal end of transmission member **244** is coupled directly to post or screw **246**, the vibrations generated by the transducer may be transmitted through transmission member **244** and directly into post or screw **246**, which in turn transmits the vibrations directly into and through the bone **248** for transmission to the user's inner ear.

FIG. **24** illustrates a partial cross-sectional view of an oral appliance **250** placed upon the user's tooth TH with the electronics and/or transducer assembly **252** located along the lingual surface of the tooth. Similarly, the vibrations may be transmitted through the conduction transmission member **244** and directly into post or screw **246**, which in this example is implanted into the palatine bone PL. Other variations may utilize this arrangement located along the lower row of teeth for transmission to a post or screw **246** drilled into the mandibular bone.

In yet another variation, rather utilizing a post or screw drilled into the underlying bone itself, a transducer may be attached, coupled, or otherwise adhered directly to the gingival tissue surface adjacent to the teeth. As shown in FIGS. **25**A and **25**B, an oral appliance **260** may have an electronics assembly **262** positioned along its side with an electrical wire **264** extending therefrom to a transducer assembly **266** attached to the gingival tissue surface **268** next to the tooth TH. Transducer assembly **266** may be attached to the tissue surface **268** via an adhesive, structural support arm extending from oral appliance **260**, a dental screw or post, or any other structural mechanism. In use, the transducer may vibrate and transmit directly into the underlying gingival tissue, which may conduct the signals to the underlying bone.

For any of the variations described above, they may be utilized as a single device or in combination with any other variation herein, as practicable, to achieve the desired hearing level in the user. Moreover, more than one oral appliance device and electronics and/or transducer assemblies may be utilized at any one time. For example, FIG. **26** illustrates one example where multiple transducer assemblies **270**, **272**, **274**, **276** may be placed on multiple teeth. Although shown on the lower row of teeth, multiple assemblies may alternatively be positioned and located along the upper row of teeth or both rows as well. Moreover, each of the assemblies may be configured to transmit vibrations within a uniform frequency range. Alternatively in other variations, different assemblies may be configured to vibrate within non-overlapping frequency ranges between each assembly. As mentioned above, each transducer **270**, **272**, **274**, **276** can be programmed or

preset for a different frequency response such that each transducer may be optimized for a different frequency response and/or transmission to deliver a relatively high-fidelity sound to the user.

Moreover, each of the different transducers **270**, **272**, **274**, **276** can also be programmed to vibrate in a manner which indicates the directionality of sound received by the microphone worn by the user. For example, different transducers positioned at different locations within the user's mouth can vibrate in a specified manner by providing sound or vibrational queues to inform the user which direction a sound was detected relative to an orientation of the user. For instance, a first transducer located, e.g., on a user's left tooth, can be programmed to vibrate for sound detected originating from the user's left side. Similarly, a second transducer located, e.g., on a user's right tooth, can be programmed to vibrate for sound detected originating from the user's right side. Other variations and queues may be utilized as these examples are intended to be illustrative of potential variations.

In variations where the one or more microphones are positioned. In intra-buccal locations, the microphone may be integrated directly into the electronics and/or transducer assembly, as described above. However, in additional variation, the microphone unit may be positioned at a distance from the transducer assemblies to minimize feedback. In one example, similar to a variation shown above, microphone unit **282** may be separated from electronics and/or transducer assembly **280**, as shown in FIGS. **27**A and **27**B. In such a variation, the microphone unit **282** positioned upon or adjacent to the gingival surface **268** may be electrically connected via wire(s) **264**.

Although the variation illustrates the microphone unit **282** placed adjacent to the gingival tissue **268**, unit **282** may be positioned upon another tooth or another location within the mouth. For instance, FIG. **28** illustrates another variation **290** which utilizes an arch **19** connecting one or more tooth retaining portions **21**, **23**, as described above. However, in this variation, the microphone unit **294** may be integrated within or upon the arch **19** separated from the transducer assembly **292**. One or more wires **296** routed through arch **19** may electrically connect the microphone unit **294** to the assembly **292**. Alternatively, rather than utilizing a wire **296**, microphone unit **294** and assembly **292** may be wirelessly coupled to one another, as described above.

In yet another variation for separating the microphone from the transducer assembly, FIG. **29** illustrates another variation where at least one microphone **302** (or optionally any number of additional microphones **304**, **306**) may be positioned within the mouth of the user while physically separated from the electronics and/or transducer assembly **300**. In this manner, the one or optionally more microphones **302**, **304**, **306** may be wirelessly coupled to the electronics and/or transducer assembly **300** in a manner which attenuates or eliminates feedback, if present, from the transducer.

The applications of the devices and methods discussed above are not limited to the treatment of hearing loss but may include any number of further treatment applications. Moreover, such devices and methods may be applied to other treatment sites within the body. Modification of the above-described assemblies and methods for carrying out the invention, combinations between different variations as practicable, and variations of aspects of the invention that are obvious to those of skill in the art are intended to be within the scope of the claims.

What is claimed is:

1. A device, comprising:

a. an actuatable transducer disposed within or upon a first portion of a housing which is secured and in vibratory communication with a first surface of at least one tooth of a subject, the housing having a second portion which is secured along a second surface of the at least one tooth opposite to the first surface such that an occlusal surface is unobstructed by the first and second portions of the housing;

b. one or more body sensors positioned within or upon the body of the subject; and

c. an electronic assembly disposed within or upon the housing, wherein the one or more body sensors are in communication with the electronic assembly.

2. The device of claim **1**, further comprising a linking unit coupled to the housing and the one or more body sensors.

3. The device of claim **2**, wherein the linking unit is adapted to communicate with a remote station.

4. The device of claim **1**, wherein the housing comprises one or more sensors embedded therein or thereon.

5. The device of claim **1**, wherein the housing comprises a data storage device.

6. The device of claim **5**, wherein the data storage device is encrypted.

7. The device of claim **2**, further comprising a local transceiver coupling the housing with the one or more body sensors and the linking unit.

8. The device of claim **7**, wherein the local transceiver transmits encrypted data.

9. The device of claim **2**, further comprising a wireless local area network (LAN) or a wired LAN coupling the housing with the one or more body sensors and the linking unit.

10. The device of claim **2**, wherein the linking unit is coupled to a wide area network (WAN).

11. The device of claim **3**, wherein the remote station is chosen from: a satellite, a cellular tower, or a relay station.

12. The device of claim **1**, further comprising a beacon coupled to the housing to identify a person in need of assistance.

13. The device of claim **12**, wherein the beacon comprises an audible signal, a location signal, or a visible signal.

14. The device of claim **1**, wherein the one or more body sensors senses a vital sign or-an environmental.parameter.

15. The device of claim **1**, wherein the one or more body sensors senses one or more of: body temperature, environment temperature, hydration, heart rate, EKG, EEG, pulse rate, oxygen saturation, respiratory cycle, air flow velocity, and pH level.

16. The device of claim **1**, further comprising a microphone to pick up sound.

17. The device of claim **16**, wherein the microphone comprises one or more of: an intraoral microphone, and an extraoral microphone.

18. The device of claim **16**, wherein the microphone is configured to transmit a user's voice.

19. The device of claim **1**, wherein the device is used by one of: workers in loud environments, an entertainer, an athlete, support personnel, a soldier, a medic, a fireman, and an emergency worker.

20. The device of claim **2**, comprising a wireless sensor network coupled to the housing, the one or more body sensors, or the linking unit.

21. The device of claim **3**, wherein the linking unit wirelessly communicates with other linking units to form a network.

22. The device of claim **21**, wherein the network is a local area network or a wide area network.

23. The device of claim **1**, wherein the housing further comprises a wireless communication transceiver coupled to the transducer to provide received sound to the user and to provide communication for the user.

24. The device of claim **1**, wherein the device comprises an oral appliance having a shape which conforms to the at least one tooth.

25. A method for sensing one or more body or environmental parameters, comprising:

a. placing a device within the mouth of a subject, the device comprising a an actuatable transducer disposed within or upon a first portion of a housing such that the actuatable transducer is secured and in vibratory communication with a first surface of at least one tooth of the subject, the housing further having a second portion which is secured along a second surface of the at least one tooth opposite to the first surface such that an occlusal surface is unobstructed by the first and second portions of the housing;

b. sensing one or more body parameters or environmental parameters via one or more body sensors positioned within or upon the body of the subject, where the one or more body sensors are in communication with an electronic assembly disposed within or upon the housing; and

c. linking the device with the one or more body sensors.

26. The method of claim **25**, wherein the actuatable transducer is a piezoelectric transducer.

27. The method of claim **25**, wherein the device is a custom fitted oral device.

28. The method of claim **25**, comprising embedding one or more sensors in the device.

29. The method of claim **25**, comprising storing medical or environmental data in the device.

30. The method of claim **25**, comprising storing data in the device as a secured black box device for subsequent forensic analysis.

31. The method of claim **25**, comprising monitoring user activity.

32. The method of claim **31**, wherein at least one of the one or more body sensors is an accelerometer.

33. The method of claim **25**, wherein linking comprises linking the device and the one or more body sensors to a remote station.

34. The device of claim **1**, wherein the housing is custom fitted to one or more teeth of the subject.

35. The device of claim **1**, wherein the housing is configured as a mouth wearable communicator.

36. The device of claim **2**, wherein the device is configured for two way communication between the device and the linking unit.

37. The device of claim **1**, wherein the actuatable transducer is a piezoelectric transducer.

* * * * *

专利名称(译)	提供双向通信的系统和方法		
公开(公告)号	US8795172	公开(公告)日	2014-08-05
申请号	US11/952780	申请日	2007-12-07
[标]申请(专利权)人(译)	索尼图斯医疗公司		
申请(专利权)人(译)	SONITUS MEDICAL，INC.		
当前申请(专利权)人(译)	SONITUS MEDICAL，INC.		
[标]发明人	ABOLFATHI AMIR KASSAYAN REZA		
发明人	ABOLFATHI, AMIR KASSAYAN, REZA		
IPC分类号	H04W4/20 G06F19/00 H04M1/05 H04L29/08 H04M1/60 A61B5/00 H04W4/90		
CPC分类号	G06F19/3418 A61B5/0022 A61B5/0031 H04L67/12 A61B5/682 A61B5/1112 H04M1/6066 A61B5/002 H04L67/18 A61B5/4504 A61B5/0002 H04M1/05 H04W4/20 H04B1/385 A61B5/7465 G16H10/65 G16H80/00 H04B1/38 H04M1/60 H04M1/6033 H04M1/725 H04M1/72527		
审查员(译)	THOMSON，WILLIAM		
其他公开文献	US20090149722A1		
外部链接	Espacenet USPTO		

摘要(译)
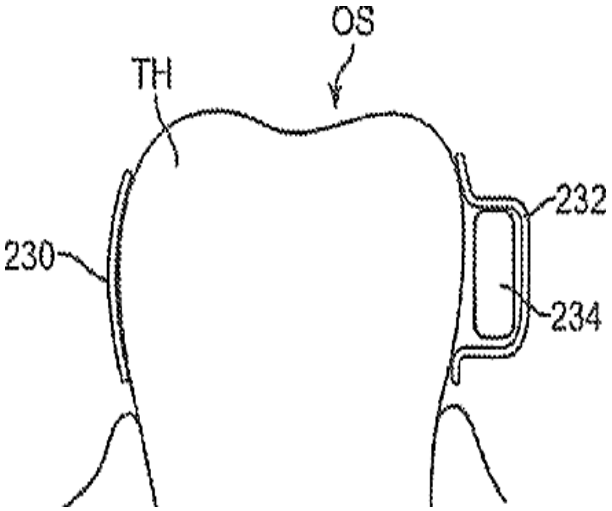
电子和换能器装置可以附接，粘附或以其他方式嵌入可移除的口腔器具或其他口腔装置中或上，以形成双向通信组件。在另一个实施例中，该装置提供电子和换能器装置，其可以附接，粘附或以其他方式嵌入可移除的口腔器具或其他口腔装置中或上，以形成包含患者可识别信息的医疗标签。这种口腔器具可以是利用通过传统牙科印模方法获得的牙科结构的复制模型的热成形工艺制造的定制装置。电子和换能器组件可以直接或通过接收器接收输入声音，以处理和放大信号，并通过耦合到牙齿或其他骨结构（例如上颌骨，下颌骨或腭骨）的振动换能器元件传输处理过的声音。结构体。