US 20030032949A1

(19) United States

(12) Patent Application Publication (10) Pub. No.: US 2003/0032949 A1

Schuele et al. (43) Pub. Date: Feb. 13, 2003

(54) METHOD AND DEVICE FOR NON-INVASIVE REGULATION OF TEMPERATURE WITH RADIATION, ESPECIALLY LASER RADIATION OF BIOLOGICAL TISSUE

(76) Inventors: **George Schuele**, Luebeck (DE); **Ralf Brinkmann**, Luebeck (DE)

Correspondence Address:
CROWELL & MORING LLP
INTELLECTUAL PROPERTY GROUP
P.O. BOX 14300
WASHINGTON, DC 20044-4300 (US)

(21) Appl. No.: **10/201,250**

(22) Filed: **Jul. 24, 2002**

(30) **Foreign Application Priority Data**

Jul. 24, 2001 (DE)..... 101 35 944.6

**Publication Classification**

(51) **Int. Cl.**[7] ..... **A61B 18/20**

(52) **U.S. Cl.** ..... **606/4**

(57) **ABSTRACT**

A method and a system for the non-invasive temperature determination on biological tissue, particularly at the fundus of the eye, treated by a treatment radiation, particularly laser radiation, wherein, during the respective irradiation time, at essentially identical time intervals, additional radiation pulses of a shorter pulse duration and a lower energy are aimed at the treated biological tissue, the resulting tissue expansions and/or contractions being detected by a pressure measurement or optical measurement and, from the measuring signals, the absolute temperature values are determined and optionally the treatment radiation is controlled as a function thereof.

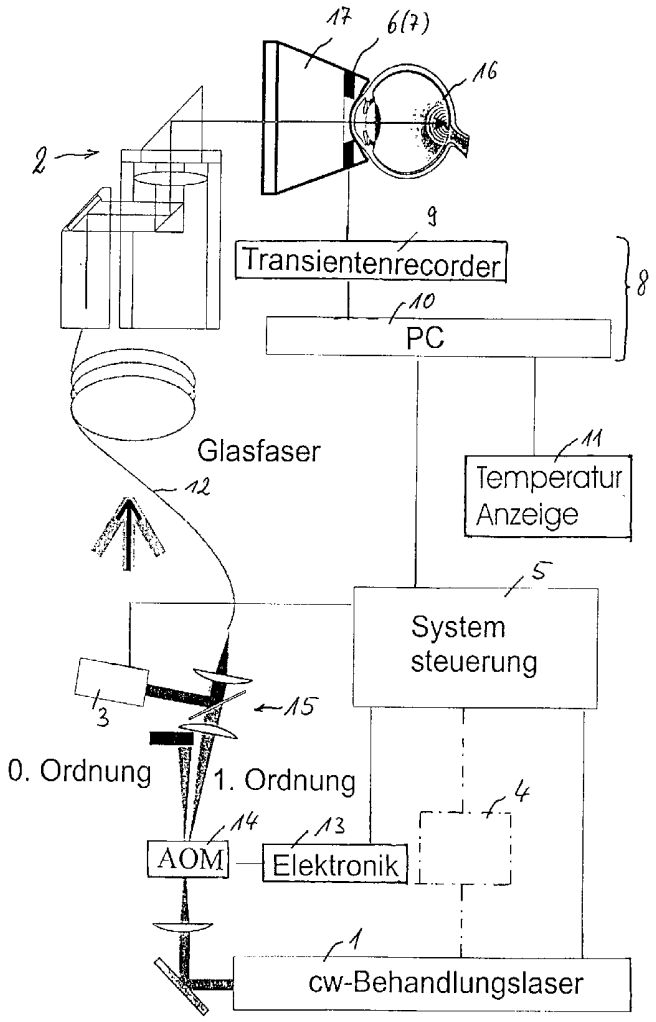

Fig. 1

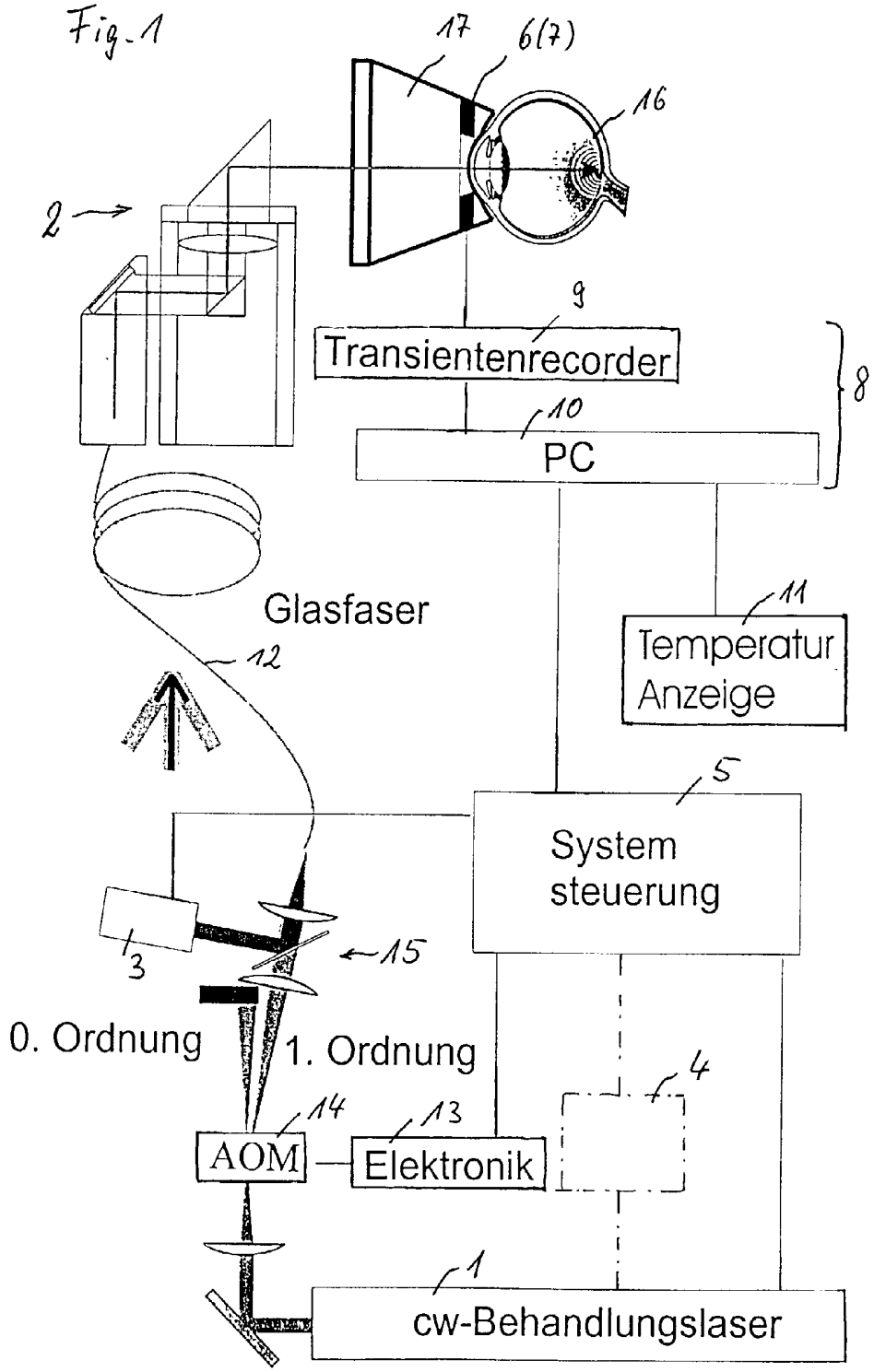
17
6(7)
16
2
9
Transientenrecorder
8
10
PC
Glasfaser
11
Temperatur
Anzeige
12
5
System
steuerung
3
15
0. Ordnung
1. Ordnung
4
14
13
AOM
Elektronik
1
cw-Behandlungslaser

Fig. 2

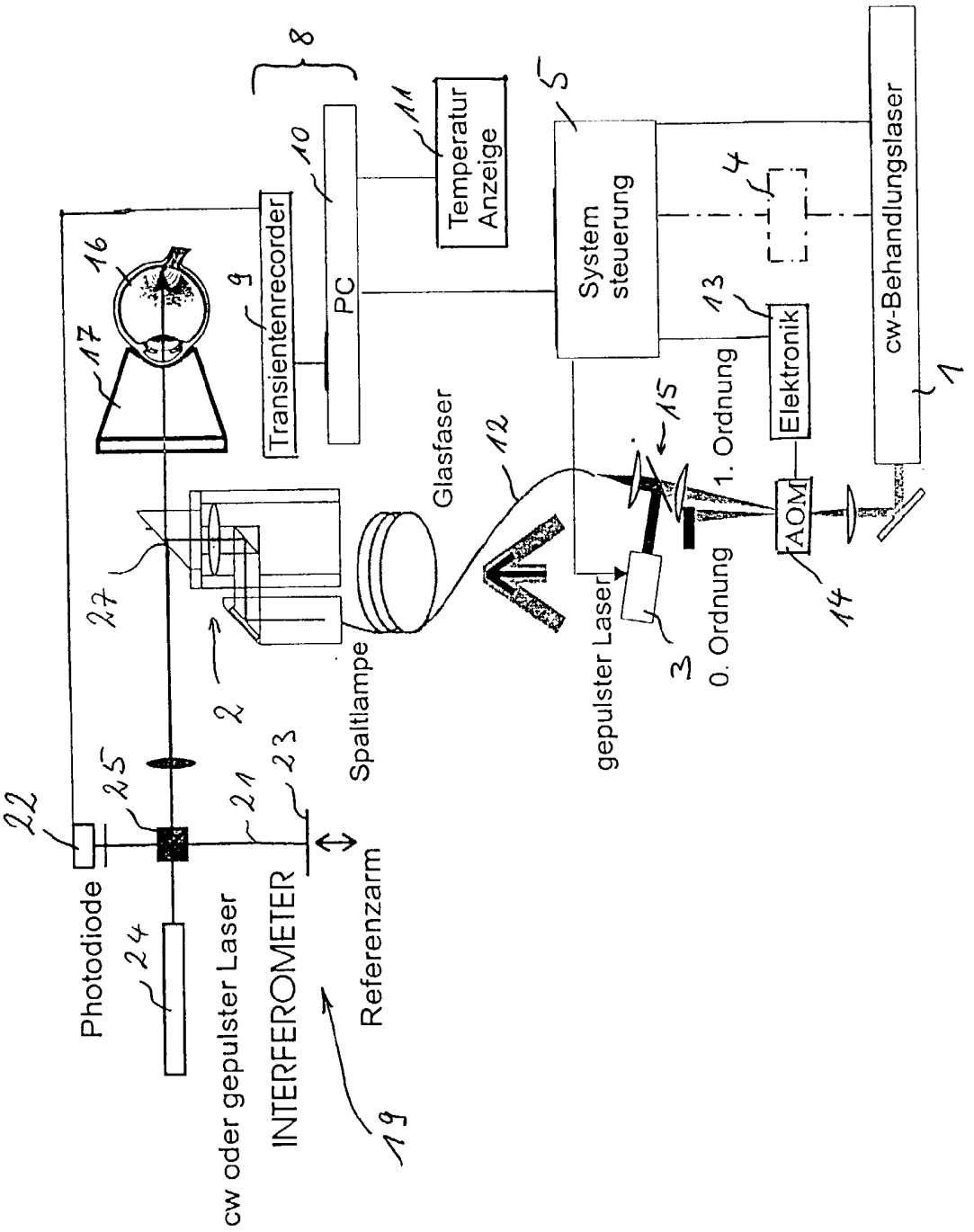
8
10
11
Temperatur Anzeige
PC
Transientenrecorder
9
16
17
5
System steuerung
4
13
Elektronik
cw-Behandlungslaser
1
Glasfaser
12
15
1. Ordnung
AOM
14
gepulster Laser
3
0. Ordnung
27
2
Spaltlampe
22
25
21
23
Photodiode
24
cw oder gepulster Laser
INTERFEROMETER
Referenzarm
19

Fig. 3

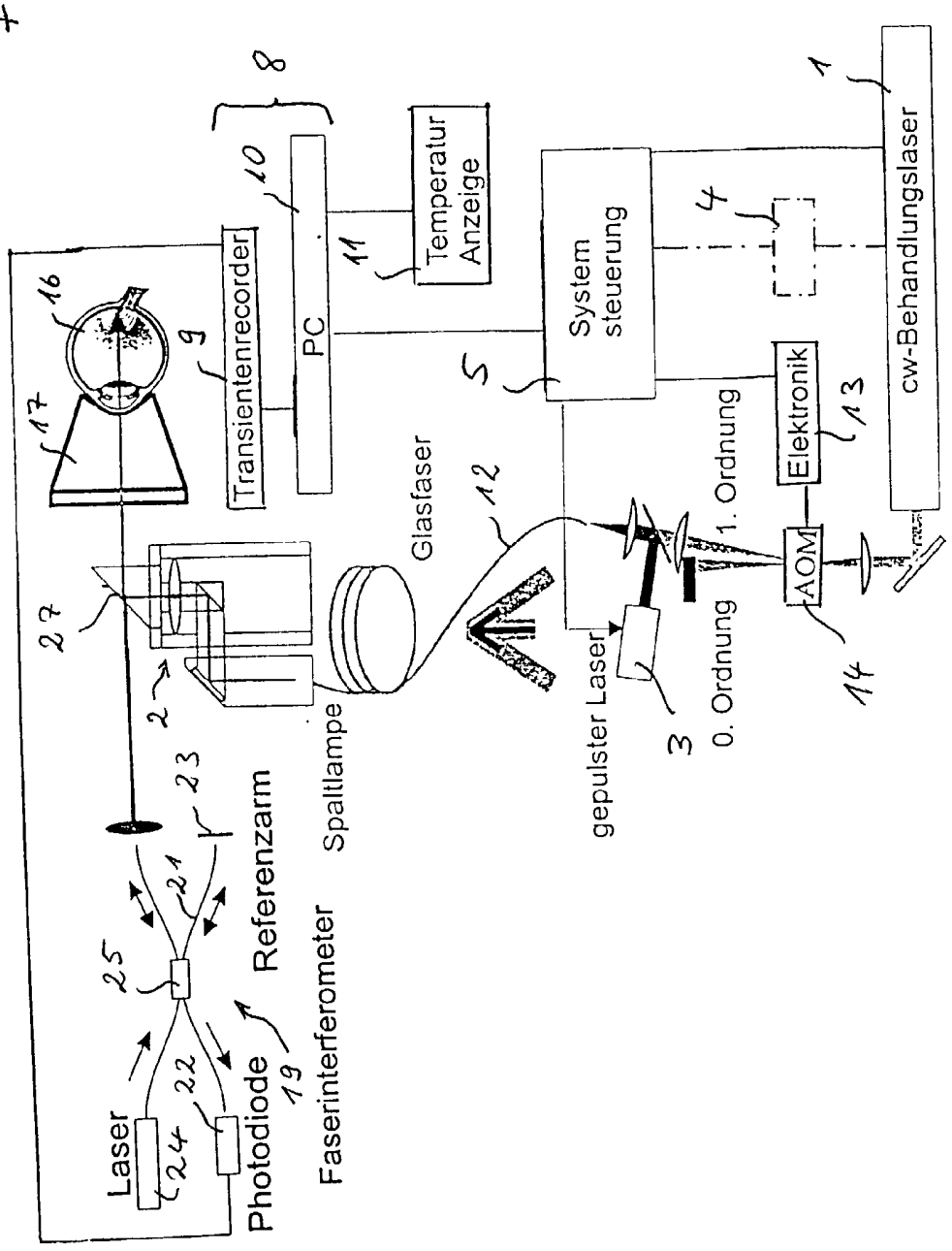
Transientenrecorder
PC
Temperatur Anzeige
System steuerung
cw-Behandlungslaser
Elektronik
AOM
1. Ordnung
0. Ordnung
gepulster Laser
Glasfaser
Spaltlampe
Referenzarm
Faserinterferometer
Laser
Photodiode
1
2
3
4
5
8
9
10
11
12
13
14
16
17
19
21
22
23
24
25
27

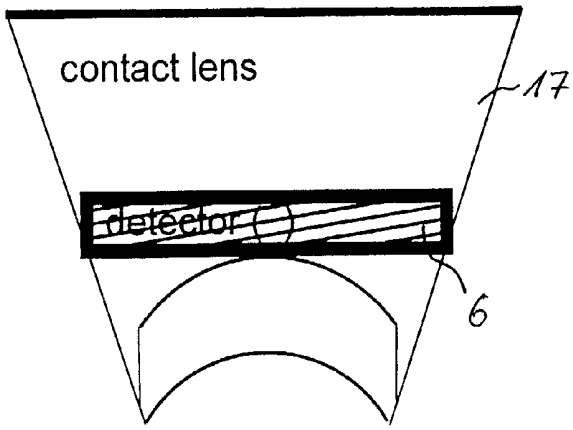


Fig. 4

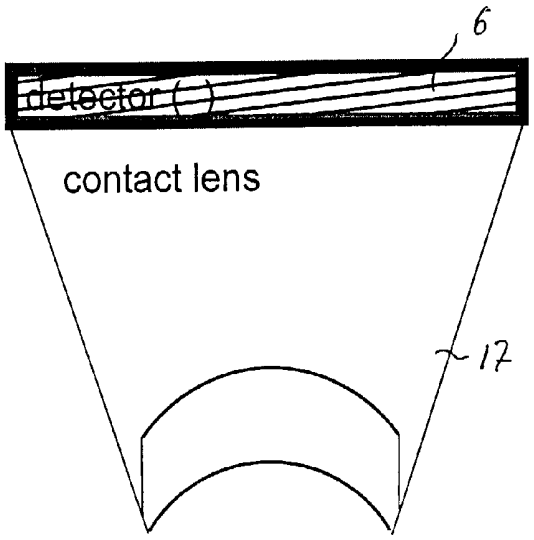


Fig. 5

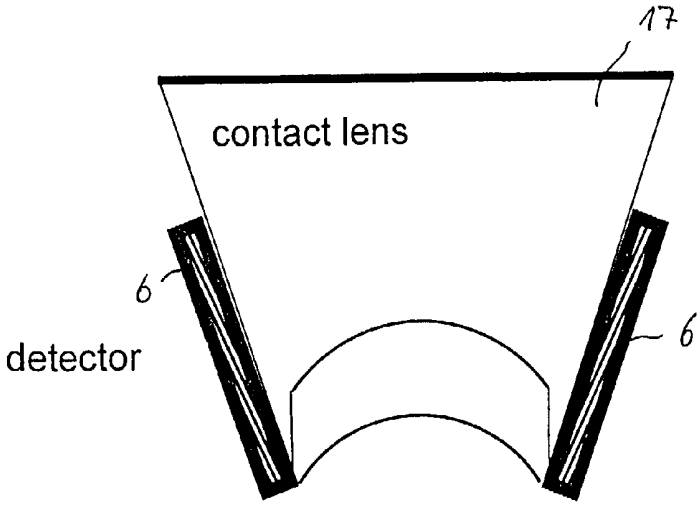


Fig. 6

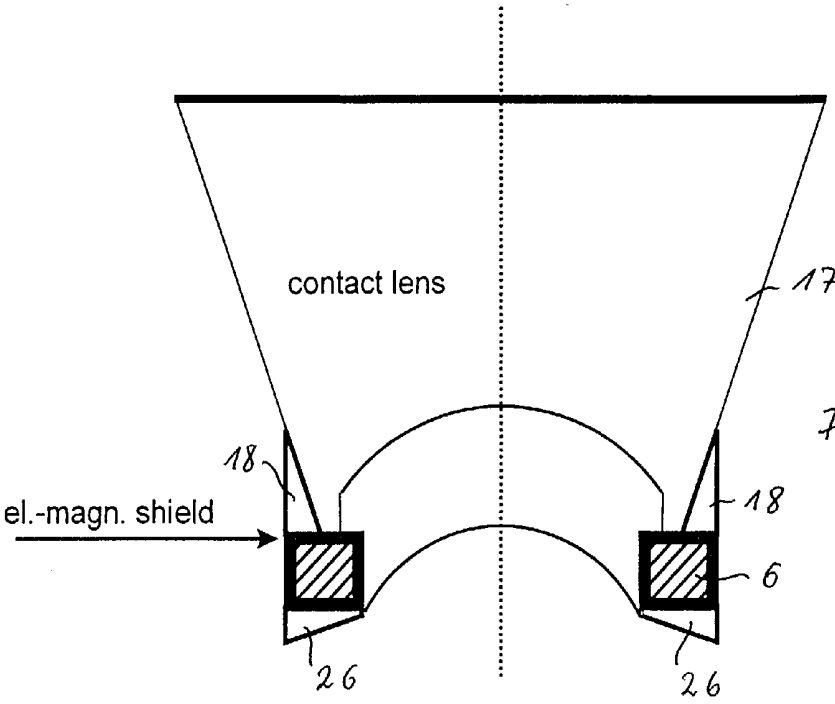
contact lens
17
18
el.-magn. shield
18
6
26
26

Fig. 7

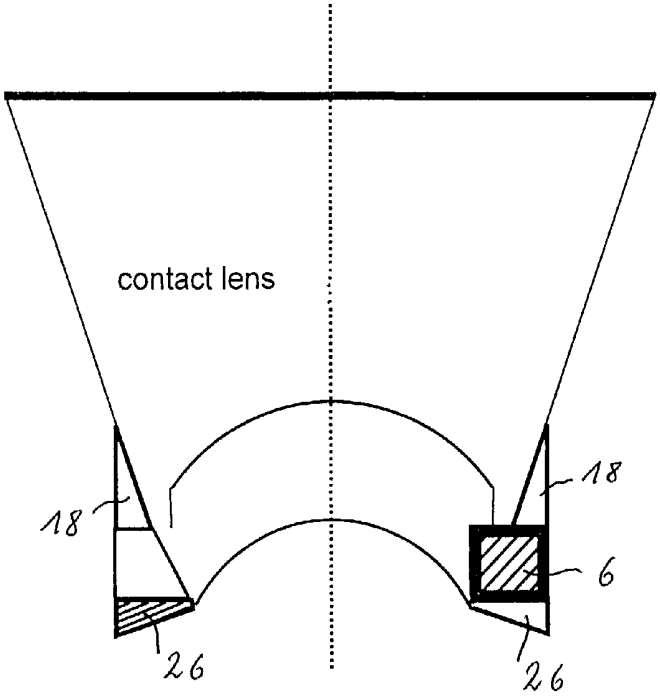
contact lens
18
18
6
26
26

Fig. 8

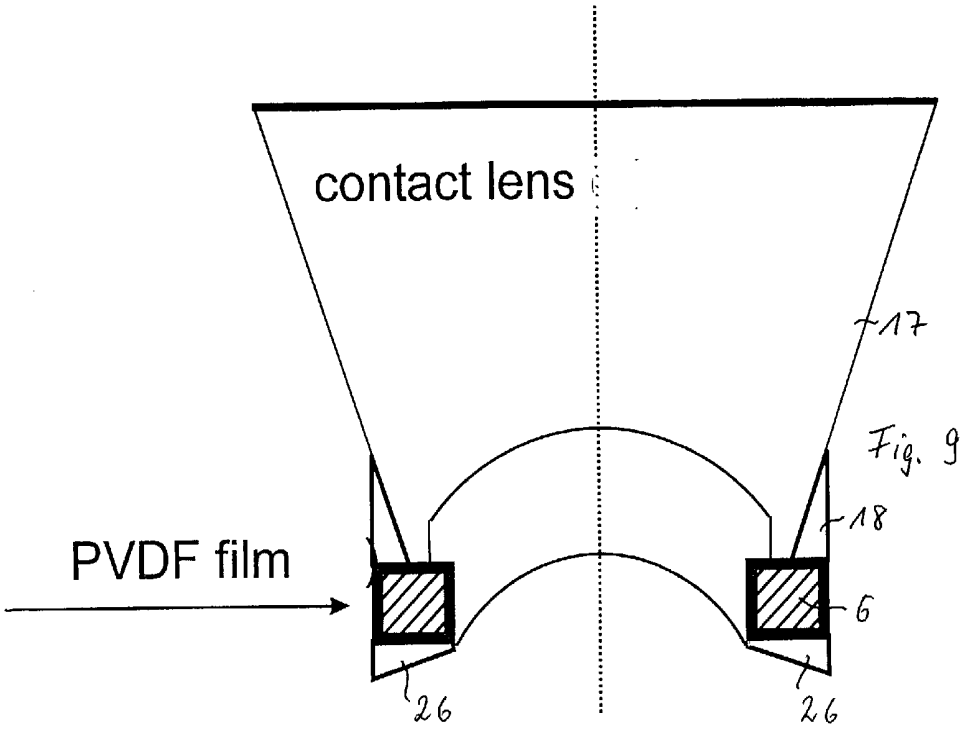
contact lens
17
18
6
26
26
PVDF film

Fig. 9

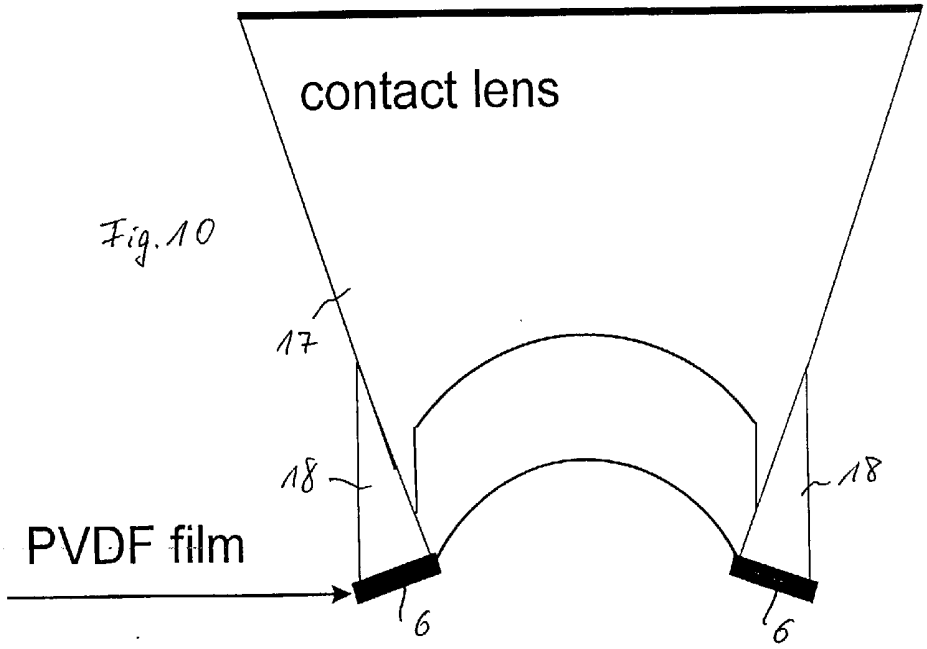
contact lens
17
18
18
6
6
PVDF film

Fig. 10

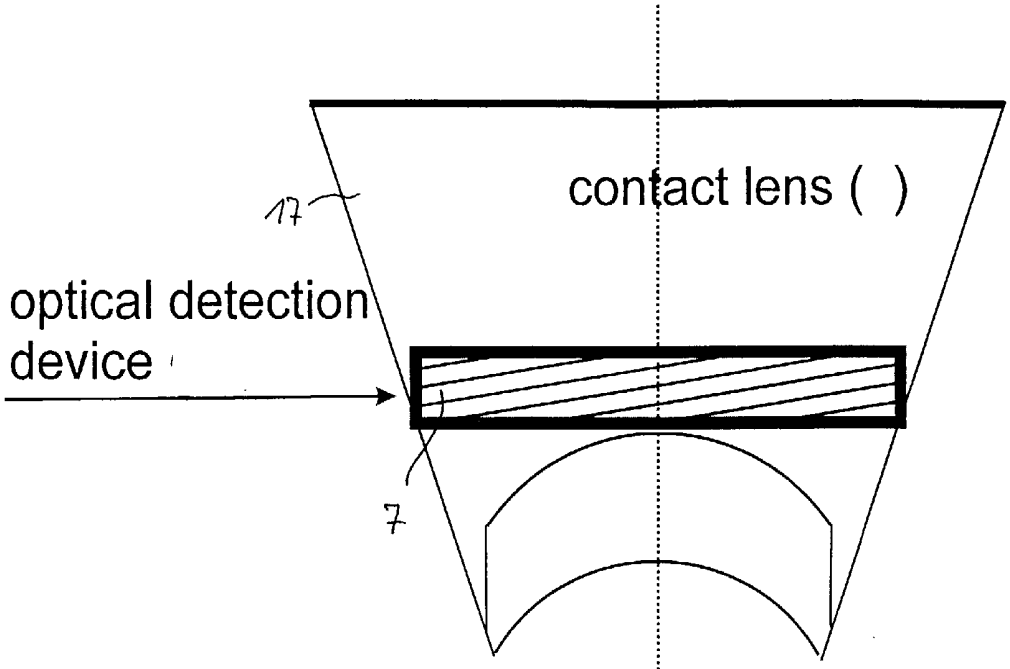


Fig. 11

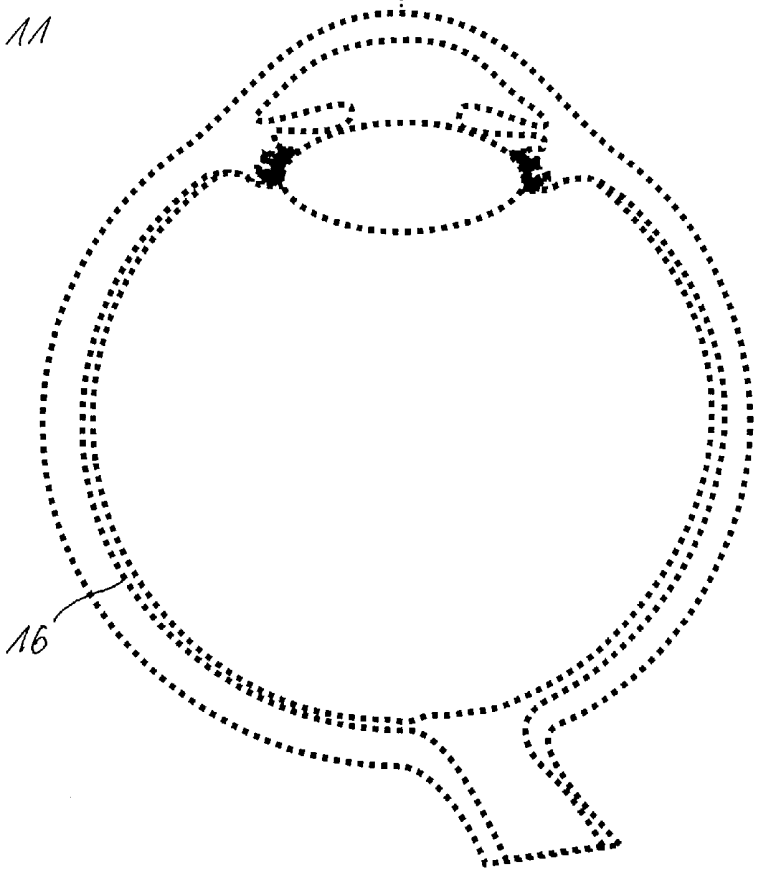

Fig. 12

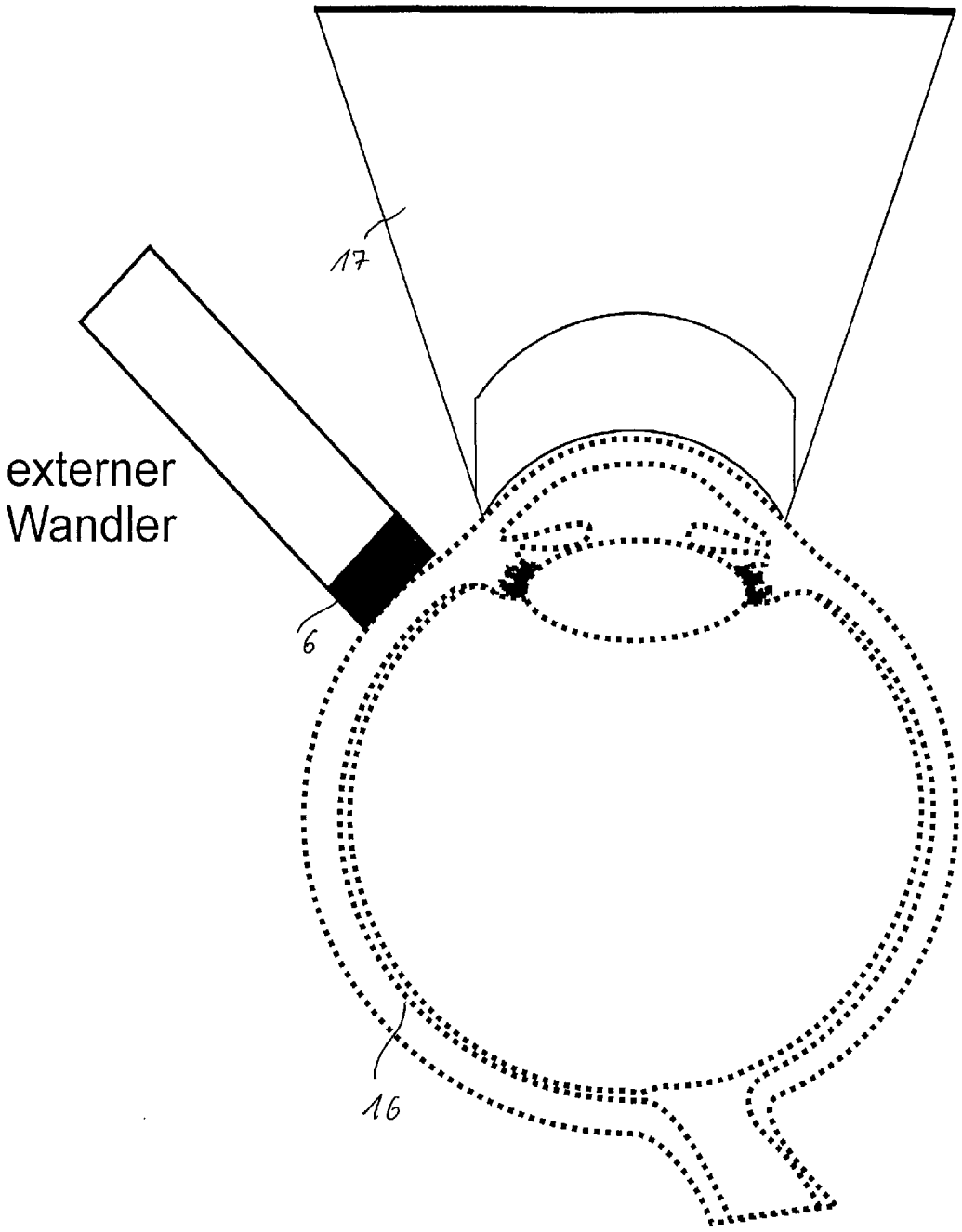

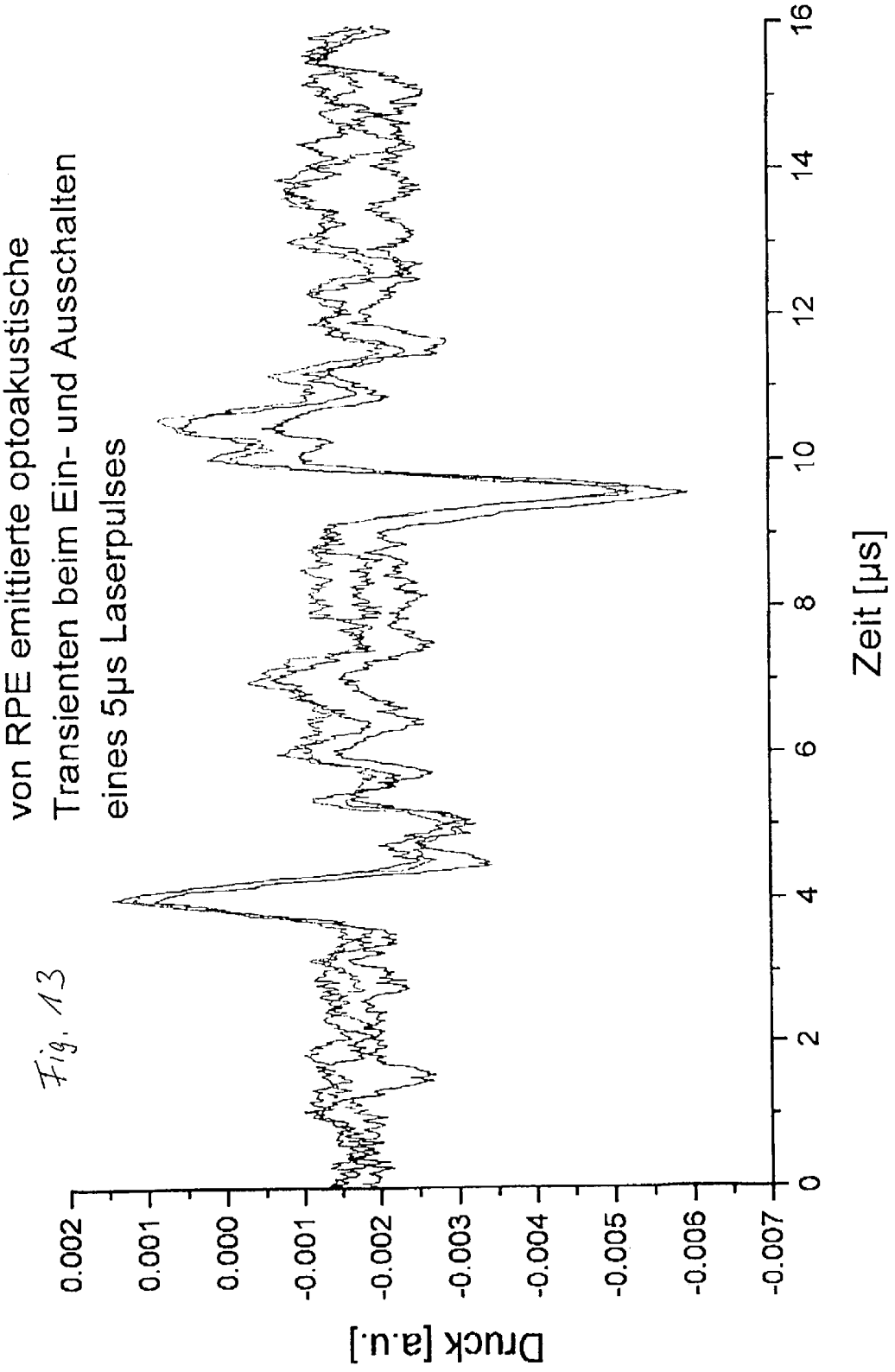
von RPE emittierte optoakustische
Transienten beim Ein- und Ausschalten
eines 5µs Laserpulses
Druck [a.u.]
0.002
0.001
0.000
-0.001
-0.002
-0.003
-0.004
-0.005
-0.006
-0.007
0
2
4
6
8
10
12
14
16
Zeit [µs]

Fig. 13

# METHOD AND DEVICE FOR NON-INVASIVE REGULATION OF TEMPERATURE WITH RADIATION, ESPECIALLY LASER RADIATION OF BIOLOGICAL TISSUE

[0001] The invention relates to a method and to a system for the noninvasive determination of the temperature on biological tissue treated by means of radiation, particularly laser radiation.

[0002] It is known to determine the tissue temperature in the thermal treatment of biological tissue by means of optoacoustic techniques (K. V. Larin, I. V. Larina, M. Motamedi, R. O. Esenaliev, "Monitoring Temperature Distribution with an Optoacoustic Technique in Real Time", *SPIE Proc.* 3916: 311-321, 2000).

[0003] It is known from German Patent Document DE 199 32 477 A1 to determine by means of optoacoustic techniques material changes caused on biological tissue by pulsed irradiation.

[0004] From G. Schüle, G. Hüttmann, J. Roider, C. Wirbelauer, R. Birngruber, R. Brinkmann, "Optoacoustic Measurement during μs-Irradiation of the Retinal Pigment Epithelium, *SPIE Proc. Vol.* 3914: 213-236, 200, it is known to measure the temperatures at the treated ocular fundus during the selective microphoto coagulation at the ocular fundus for the treatment of diseases of the retina by means of μs laser pulses. The pressure amplitude caused by the first treatment pulse was used for standardizing the pressure amplitude to the temperature of the ocular fundus. From the pressure amplitude increase of the subsequent treatment pulses, the temperature increase and, in addition, the respective absolute temperatures were determined by means of the dependence of the temperature on the pressure amplitudes known from calibration measurements.

[0005] In many spheres of ophthalmology, different energy sources, particularly lasers, are used for diagnostics and treatment. As a rule, the entire beamed-in energy is absorbed by the biological tissue and converted to heat, the resulting temperature increase achieving the desired treatment effect. For example, during laser photocoagulation, the retina of the eye is thermally coagulated in a targeted manner. In the case of the conventional irradiations with irradiation times about 100 ms, temperatures occur of above 60° C. Also, in the case of transpupillary thermotherapy (TTT), temperatures increases are utilized for achieving a vascular occlusion. In the case of photodynamic therapy (PDT), a previously injected dye is activated by laser irradiation on the ocular fundus. The active ingredient develops its effect only on those cells to which to which it is bound. In this case also, almost the entire beamed-in energy is absorbed in the dye and in the retina and is converted to heat. During the respective irradiation time (pulse duration) with relatively long treatment and radiation pulses in the order of from μs to several hundred seconds, a temperature increase of the treated biological tissue, particularly of the fundus of the eye, may occur which results in unintended damage to regions of the retina. A non-invasive real-time temperature determination could not yet be carried out in eye treatments of this type.

[0006] It is therefore an object of the invention to provide a method and a system for the non-invasive determination of the temperature on treated biological tissue, particularly in ophthalmology, in which radiation pulses are used for the treatment radiation.

[0007] With respect to the method, this object is achieved according to the invention by means of the characteristics of claim **1** and, with respect to the system, the object is achieved by means of the characteristics of claims **8** and **9**.

[0008] According to the invention, during the respective irradiation period of the treatment radiation, additional radiation pulses of a shorter pulse duration and a lower energy than during the treatment radiation are aimed at the treated biological tissue, or the treatment radiation is switched off for a short time and is switched back on again. The additional radiation pulses or the short-duration switch-offs of the treatment radiation may take place essentially at the same time intervals. The thermal tissue expansions occurring when the additional radiation pulses are used and the tissue contractions occurring during the short-duration switch-offs of the treatment radiation are detected by a pressure measurement or by an optical measurement. From the respective measuring signals, which are caused by the additional radiation pulses (measuring radiation pulses) or the short-duration switch-offs of the treatment radiation, the temperature increase is determined; particularly the respective absolute values of the temperature are determined.

[0009] In the case of the invention, the pulse energy of the additionally beamed-in radiation pulses or the switch-off time, during which the treatment radiation is switched off several times, will be constant. The energy applied into the tissue causes a temperature-dependent, optoacoustically analyzable, thermal expansion of the tissue, for which the green iron coefficient is a measurement. By means of calibration measurements, a calibration curve is obtained which has a linear rise of the acoustic amplitudes with the temperature according to the green iron coefficient (G. Schüle, G. Hüttmann, J. Roider, C. Wirbelauer, R. Birngruber, R. Brinkmann, "Optoacoustic Measurement during μs Irradiation of the Retinal Pigment Epithelium, *SPIE, Proc.,* Vol. 3914: 230-236, 2000).

[0010] In the case of the invention, short-duration laser pulses are preferably used with a few ns, for example **8** ns, and with a low pulse energy of a few μJ, for example 5 μJ. The laser pulses may also be longer. Because of the high light absorption at the fundus of the eye, particularly of the retinal pigmentary epithelium (RPE), the low pulse energies are sufficient for obtaining sufficient measuring values, particularly of the pressure measurement (acoustic measurement) and of the optical measurement. In the case of the pressure measurement, preferably a maximal value or an integral of the respectively measured pressure half-wave is used for the analysis during the temperature determination. However, other algorithms, such as the slope or a Fourier transformation of the measuring signals, can also be used in the analysis.

[0011] As an optical measurement, an interference measurement by means of an interferometer is preferably used, particularly a fiber interferometer whose measuring beam is coupled into the treatment lens system of the treatment radiation.

[0012] Preferably, during the switch-on of the treatment radiation by means of an additional short-duration radiation pulse or immediately after the switch-on of the treatment radiation by means of a short-duration switch-off, a measuring signal is obtained from the occurring tissue expansion

or contraction, which measuring signal is standardized to the normal body temperature, for example, the human body temperature of 37° C.

[0013] On the basis of the continuous monitoring of the temperature also during the respective irradiation time (pulse duration) of the treatment radiation, a control of the treatment radiation can be carried out as a function of the respective determined temperature at the irradiation site. In this case, particularly the pulse duration or pulse power of the treatment beam can be controlled in order to obtain the desired temperature at the irradiation site.

[0014] The invention will be explained in greater detail by means of the figures.

[0015] **FIG. 1** is a view of a first embodiment for a system for implementing the invention;

[0016] **FIG. 2** is a view of a second embodiment of a system by means of which the invention can be implemented; and

[0017] **FIG. 3** is a view of a third embodiment;

[0018] FIGS. **4** to **12** are views of embodiments of detector arrangements by means of which the thermal tissue expansion or contraction can be detected; and

[0019] **FIG. 13** is a view of electrical signals which represent optoacoustic transients.

[0020] The system illustrated in FIGS. **1** to **3** partially together with a block diagram contains a treatment radiation source, such as a laser beam source, particularly a continuous-wave laser. The treatment radiation source **1** generates the treatment radiation used for the treatment of the ocular fundus. The treatment radiation is processed and, by way of a switch **14** controlled by an assigned electronic control system **13**, for example, an acousto-optical modulator, mechanical shutter or the like, and a coupler lens system **15**, coupled into an optical waveguide, such as a glass fiber **12**. At the glass fiber end, an irradiation lens system **2** is situated, for example, in the form of a slit lamp, by means of which the treatment radiation is aimed at the fundus, particularly the retina of an eye **16**.

[0021] The treatment radiation source **1** is controlled by a control device **5**. By means of the control device **5**, particularly the radiation energy and the time duration can be controlled by means of which the treatment radiation can be aimed at the ocular fundus.

[0022] Furthermore, the systems illustrated in FIGS. **1** to **3** have an additional radiation source **3** in the form of a pulsed laser. The radiation of the additional radiation source **3** can be coupled by means of a coupler lens system **15**, which may have a semi-transmitting mirror, into the beam path of the treatment radiation. In the illustrated embodiments, this coupling-in takes place before the or simultaneously with the coupling-in of the treatment radiation into the optical waveguide **12**. The illustrated systems are preferably used in the phototherapy of certain points at the fundus of the eye, particularly of pigmented tissue, for example, in photodynamic therapy (PDT). In this case, a previously injected dye is activated by laser irradiation at the fundus of the eye. For this purpose, laser pulses are used, for example, which have an irradiation time (pulse duration) of approximately 90 seconds. As a rule, in photodynamic therapy, this pulse duration corresponds to the treatment time.

[0023] Further, the illustrated systems can be used for the photocoagulation by means of laser radiation as the treatment radiation. The treatment duration is approximately 100 ms. For this purpose, a continuouswave laser pulse with a corresponding pulse duration is used. Furthermore, a transpupillary thermotherapy (TTT) can be carried out. For this purpose, the irradiation takes place in the second range and a vascular occlusion is achieved resulting from the targeted temperature rise.

[0024] In addition, a selective RPE treatment can be carried out. In this case, laser pulses are used as treatment radiation which have a pulse duration of approximately 30 $\mu$s during a treatment time of approximately 300 ms.

[0025] By means of the illustrated systems, additional short-duration radiation pulses are superimposed on the radiation pulses of the treatment radiation. The pulse duration of the additional radiation pulses is several hundred times to several thousand times shorter with respect to time than the treatment times (pulse durations) of the treatment radiation. The pulse durations of the additional radiation, particularly of the additional laser pulses, which are generated by the additional radiation source **3**, have a pulse duration of several ns, for example 5 to 100 ns. The pulse energy is also extremely low and amounts to several $\mu$J, for example, approximately 5 $\mu$J. The additional radiation pulses coupled at regular intervals by the coupler lens system **15** into the treatment radiation have a constant pulse energy. The additional pulses cause short-duration thermal expansions of the treated biological tissue which can be detected by measuring the pressure (**FIG. 1**) or by measuring the interference (**FIGS. 2 and 3**). The amplitudes of these short-duration expansions are proportional to the temperature of the biological medium.

[0026] In the embodiment illustrated in **FIG. 1**, these thermal expansions at the fundus of the eye are detected by an acoustic converter **6** which receives the pressure waves emitted by the tissue expansions and converts them to electrical signals. For this purpose, the acoustic converter **6** is arranged in or on a contact lens **17** which can be placed on the eye and receives the pressure waves by way of the eyeball. Sound detectors of the arrangements illustrated in **FIGS. 4, 5** and **6** may be provided as acoustic converters **6**. The sound detectors may, for example, consist of a piezoelectric material. In the embodiment illustrated in **FIG. 7, a** ring-shaped acoustic converter **6** is provided which may also consist of a piezoelectric material. In the embodiment illustrated in **FIG. 8**, the converter **6** is situated on one side of the contact lens **17**.

[0027] In the embodiments of **FIGS. 9 and 10**, the acoustic converter **6** consists of polyvinylidene fluoride (PVDF). In the embodiment illustrated in **FIG. 10, a** PVDF film is provided as a piezoelectric element. On their front side, the acoustic converters **6** illustrated in FIGS. **7** to **10** have an acoustic impedance matching device **26** in the form of a conical placing edge of the contact lens **17** adapted to the eye in order to achieve a better introduction of sound into the converter **6**. The sloped contact surface ensures an improved contact with the surface of the eye. On the rearward side, the converters **6** have an acoustically absorbing layer **18** in order

to reduce reflections of the sound waves. In the embodiment illustrated in **FIG. 12**, an external converter **6** is used which can be placed on the eye **16**.

[**0028**] In the embodiment illustrated in **FIG. 11**, an interferometric detector **7** is installed into the contact lens **17**. As a function of the pressure waves on the ocular fundus generated by thermal expansion, the interference phenomena at the detector **7** will change. These can be detected, for example, by means of a photodiode **22**, as in the embodiments of **FIGS. 2 and 3**, and can be analyzed by means of a transient recorder **9** in a computer of an analyzing device **8** with respect to absolute temperature values.

[**0029**] The measuring values of the detectors, which are illustrated in FIGS. **3** to **9**, are fed as electrical transients to the transient recorder **9** in **FIG. 1** and are converted in the computer **10** to the absolute values of the temperature. The absolute values of the temperature can be indicated by means of a temperature indicating device **11** which is connected to the computer **10**.

[**0030**] In the embodiments illustrated in **FIGS. 2 and 3**, an interferometer **19**, which is constructed as a dual-beam interferometer, is used for detecting the thermal tissue expansions. The interferometer **19** of **FIG. 3** is constructed as a fiber interferometer. In a known manner, the illustrated interferometer **19** has a radiation source **24** which may be constructed as a cw or pulsed laser. The radiation emitted by the radiation source **24** is introduced in a measuring beam path **20**, for example, by way of a beam splitter **27** at the irradiation lens system **2** into the treatment beam path and, at the fundus of the eye, impinges on the site treated by the treatment beam.

[**0031**] In addition, the illustrated interferometer **19** has a reference reflector **23** to which the radiation emitted by the beam source **24** is fed by way of a beam splitter **25** in a reference beam path **21**. The reference reflector **23** can be moved for in-stage purposes in the direction of the reference beam path **21**. During the treatment and the temperature measurement, the distance from the beam splitter **25** remains constant.

[**0032**] The radiation of the radiation source **24** reflected by the fundus of the eye and the radiation reflected by the reference reflector **23** are guided together at the beam splitter **25** and, as a function of the thermal expansions at the fundus of the eye, interferences occur which are detected by a photodiode **22**. The changes or transitions of the reference phenomena are fed to the transient recorder **9** in the form of electrical signals. **FIG. 13** illustrates optoacoustic transients which are measured during the switch-on and switch-off of a 5 $\mu$s laser pulse applied to the RPE. During the switch-on, a positive pressure wave is obtained as a result of the thermal expansion. During the switch-off, a negative pressure wave (tension wave) is formed by the cooling-down. This amplitude is higher because of the now higher temperature. This corresponds to the absolute temperature increase. In the computer **10** of the analyzing device **8**, the temperature values will then be determined therefrom, as in the embodiment of **FIG. 1**. The absolute values of the temperature can also be indicated by the indicating device **11**.

[**0033**] In the two embodiments of **FIGS. 1 and 2**, the temperature values are fed to the control device **5**. As a function of these temperature values, the control or actuation of the treatment radiation source **1** takes place as mentioned above.

[**0034**] The embodiments of FIGS. **1** to **3** were explained in connection with an additional pulsed radiation source **3**. This pulsed radiation source **3** can generate, preferably at firmly defined time intervals, the short-duration additional radiation pulses which are coupled by means of the coupler lens system **15** into the beam path of the treatment radiation source **1**. It is also possible that the additional radiation source **3** is controlled by the control device **5**.

[**0035**] As an alternative to the additional radiation source **3**, a switching device **4** may be provided which switches off the treatment radiation source **1** during the respective irradiation time for a short duration (several nanoseconds) and, in the case of a long treatment radiation time, up to several seconds, and switches it on again. As illustrated by a dash-dotted line, for this purpose, the switching device **4** may be correspondingly controlled by the control device **5**. During the short-duration switch-off of the treatment radiation, a contraction of the treated tissue takes place at the fundus of the eye, which also causes a pressure wave which can be detected by the above-described detectors (detectors of FIGS. **4** to **12**) or the interferometer **19** (**FIGS. 2 and 3**). The analysis of the thus obtained measuring signals will then take place in the same manner as explained above.

[**0036**] List of Reference Numbers

[**0037**] **1** Treatment radiation source

[**0038**] **2** irradiation lens system (such as slit lamp)

[**0039**] **3** additional radiation source

[**0040**] **4** switching device

[**0041**] **5** control device

[**0042**] **6** detector (acoustic)

[**0043**] **7** detector (optical)

[**0044**] **8** analyzing device

[**0045**] **9** transient recorder

[**0046**] **10** computer

[**0047**] **11** temperature indicating device

[**0048**] **12** optical waveguide (glass fiber)

[**0049**] **13** electronic control system for the acousto-optical modulator

[**0050**] **14** switch, such as an acousto-optical modulator

[**0051**] **15** coupler lens system

[**0052**] **16** eye

[**0053**] **17** contact lens

[**0054**] **18** acoustically absorbing layer

[**0055**] **19** interferometer

[**0056**] **20** measuring beam path

[**0057**] **21** reference beam path

[**0058**] **22** photodiode

[**0059**] **23** reference reflector

[**0060**] **24** radiation source

[**0061**] **25** beam splitter

[**0062**] **26** impedance adaptation

1. Method for the non-invasive determination of the temperature on biological tissue, particularly on the fundus of the eye, treated by means of a treatment radiation, particularly laser radiation, characterized in that

during the respective irradiation period by means of the treatment radiation, additional radiation pulses of a shorter pulse duration and a lower energy than during the treatment radiation are aimed at the treated biological tissue, or the treatment radiation is switched off for a short time and is switched back on again,

the resulting tissue expansions and/or contractions are detected by a measurement of the pressure or by an optical measurement, and

from the measuring signal, the temperature and/or the temperature rise is/are determined.

2. Method according to claim 1, characterized in that, during the optical measurement, the tissue expansion and/or contraction is detected by an interference measurement.

3. Method according to claim 1, characterized in that, during the pressure measurement, an electric pressure transient is formed for the analysis during the determination of the temperature.

4. Method according to one of claims 1 to 3, characterized in that the additional radiation pulses or the short-duration switch-off of the treatment radiation is/are provided at essentially the same time intervals.

5. Method according to one of claims 1 to 4, characterized in that the measuring signal formed when the treatment radiation is switched on is standardized to the normal body temperature of the irradiated biological tissue.

6. Method according to one of claims 1 to 5, characterized in that an additional radiation pulse is applied before or during the switch-on of the treatment radiation in order to standardize the measuring signal to the body temperature.

7. Method according to one of claims 1 to 6, characterized in that the treatment radiation is controlled as a function of the determined temperature.

8. System for the non-invasive determination of the temperature of biological tissue which is treated by means of a treatment radiation, particularly a laser radiation, with a defined treatment time, characterized by

a treatment radiation source (**1**) for generating the treatment radiation,

a control device (**5**) which controls the treatment radiation source (**1**) during the defined treatment time,

an irradiation lens system (**2**) by means of which the treatment radiation is aimed at the biological tissue,

an additional radiation source (**3**), particularly a laser radiation source, which, during the treatment time, can be coupled into the irradiation lens system (**2**) for supplying additional radiation pulses,

a detector (**6**; **7**; **19**) by means of which expansions and/or contractions caused by the radiation are acoustically and/or optically measured, and

an analyzing device (**8**) which has a calibration curve indicating the proportionality of the acoustically and/or optically detected measuring signals to the temperature and converts the measuring signal into a temperature value.

9. System for the non-invasive temperature determination of biological tissue which is treated by means of a radiation, particularly a laser radiation with a defined treatment time, characterized by

a treatment radiation source (**1**) for generating the treatment radiation,

a control device (**5**) which controls the treatment radiation source (**1**) during the defined treatment time,

an irradiation lens system (**2**) by means of which the treatment radiation is aimed at the biological tissue,

an additional switching device (**4**) which, controlled by the control device (**5**) during the respectively defined irradiation time, switches the treatment radiation source (**1**) off for a short duration and switches it back on,

a detector (**6**; **7**; **19**) by means of which expansions and/or contractions caused by the radiation are acoustically and/or optically measured, and

an analyzing device (**8**) which has a calibration curve indicating the proportionality of the acoustically and/or optically detected measuring signals to the temperature and converts the measuring signal into a temperature value.

10. System according to claim 8, characterized in that the radiation pulses of the additional beam source (**3**) have a lower energy than the treatment radiation and the pulse duration is less than the respectively defined irradiation time.

11. System according to one of claims 8 to 10, characterized in that the pulse duration of the additional radiation pulses or the switch-off time of the treatment radiation is by a factor **102** and a higher factor smaller that the respective irradiation time.

12. System according to one of claims 8 to 11, characterized in that the pulse duration of the additional radiation pulses or the switch-off time of the treatment radiation is in the ns range.

13. System according to claim 8 or **11**, characterized in that the analyzing device (**8**) is connected to the control device (**5**).

14. System according to one of claims 8 to 13, characterized in that the analyzing device (**8**) is connected to a temperature indicating device (**11**) which indicates the absolute temperature values.

15. System according to one of claims 8 to 14, characterized in that the detector (**6**; **7**; **19**) is constructed as a measuring converter which can be acoustically or optically coupled to the human eye.

16. System according to claim 15, characterized in that the detector (**6**; **7**) can be coupled to the treated eye by means of a contact lens (**17**) which can be placed on the eye.

17. Use of one of the methods according to one of claims 1 to 7 for determining the temperature at the fundus of the eye which is treated by the treatment radiation, particularly laser radiation.

18. Use of a system according to one of claims 8 to 16 for determining the temperature at the fundus of the eye which is treated by the treatment radiation, particularly laser radiation.

* * * * *

| | | | |
|---|---|---|---|
| 专利名称(译) | 用于通过辐射，尤其是生物组织的激光辐射来无创地调节温度的方法和装置 | | |
| 公开(公告)号 | US20030032949A1 | 公开(公告)日 | 2003-02-13 |
| 申请号 | US10/201250 | 申请日 | 2002-07-24 |
| [标]申请(专利权)人(译) | SCHUELE GEORGE<br>BRINKMANN RALF | | |
| 申请(专利权)人(译) | SCHUELE GEORGE<br>BRINKMANN RALF | | |
| 当前申请(专利权)人(译) | SCHUELE GEORGE<br>BRINKMANN RALF | | |
| [标]发明人 | SCHUELE GEORGE<br>BRINKMANN RALF | | |
| 发明人 | SCHUELE, GEORGE<br>BRINKMANN, RALF | | |
| IPC分类号 | A61B5/00 A61B5/01 A61B17/00 A61F9/007 A61F9/008 A61B18/20 | | |
| CPC分类号 | A61B5/0095 A61B5/01 A61B2017/00084 A61B2017/00128 A61F9/00727 A61F9/008 A61F9/00814 A61F9/00821 A61F9/009 A61F2009/00844 A61F2009/00863 | | |
| 优先权 | 10135944 2001-07-24 DE | | |
| 其他公开文献 | US6830567 | | |
| 外部链接 | Espacenet USPTO | | |


摘要(译)
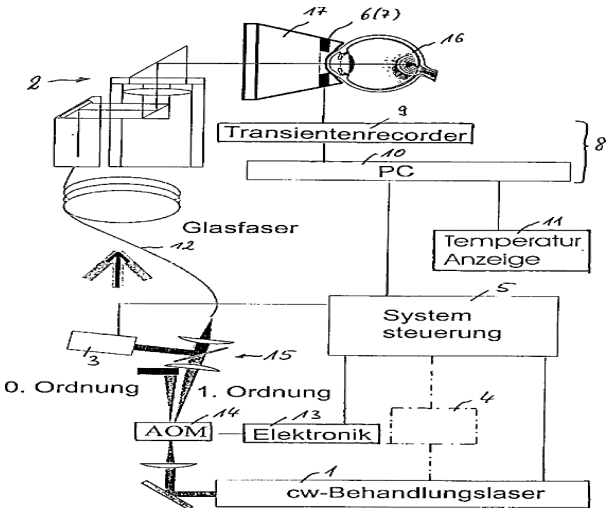
用于通过治疗辐射，特别是激光辐射治疗的生物组织，特别是眼底的非侵入性温度确定的方法和系统，其中，在相应的照射时间期间，以基本相同的时间间隔，额外的辐射脉冲持续时间较短且能量较低的脉冲瞄准处理过的生物组织，通过压力测量或光学测量检测所得的组织扩张和/或收缩，并根据测量信号确定绝对温度值并任选地根据其功能控制治疗辐射。