US 20060030783A1

(19) United States

(12) Patent Application Publication (10) Pub. No.: US 2006/0030783 A1

Tsai et al. (43) Pub. Date: Feb. 9, 2006

(54) WEIGHT AND BODY FAT MEASUREMENT DEVICE WITH TEMPERATURE MEASURING CAPABILITY

(76) Inventors: **Ching Ching Tsai**, Sindian City (TW); **Hsueh Shun Lu**, Bade City (TW)

Correspondence Address:
THOMAS, KAYDEN, HORSTEMEYER & RISLEY, LLP
100 GALLERIA PARKWAY, NW
STE 1750
ATLANTA, GA 30339-5948 (US)

(21) Appl. No.: 11/016,089

(22) Filed: Dec. 17, 2004

(30) Foreign Application Priority Data

Aug. 8, 2004 (CN) 2004200881186

Publication Classification

(51) Int. Cl.
A61B 5/05 (2006.01)
A61B 5/00 (2006.01)

(52) U.S. Cl. **600/547**; 600/549

(57) ABSTRACT

A measurement device includes a housing and a display unit mounted on a surface of the housing. A weight measurement unit and body fat measurement unit are disposed in the housing for measuring a load signal and a bioelectrical impedance signal. A temperature measurement unit is disposed in the housing for measuring a temperature signal. A controlling unit causes user-specific management information including a weight value, a body fat value and a temperature value to be transmitted to the display unit.

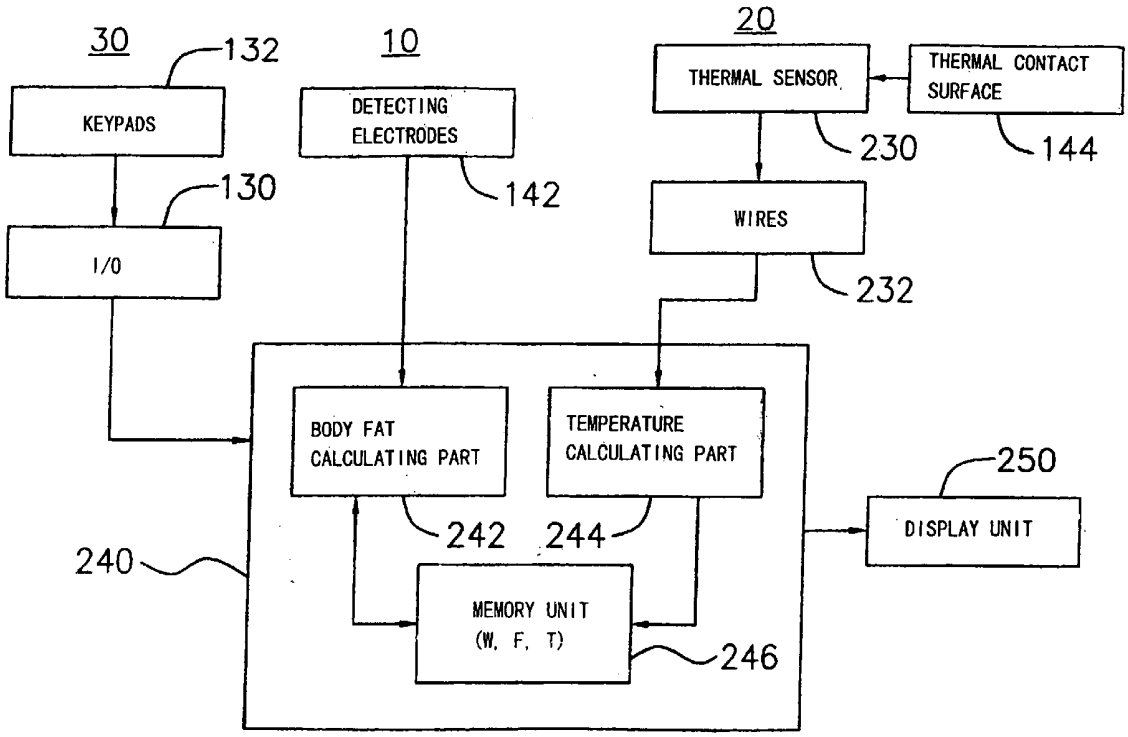

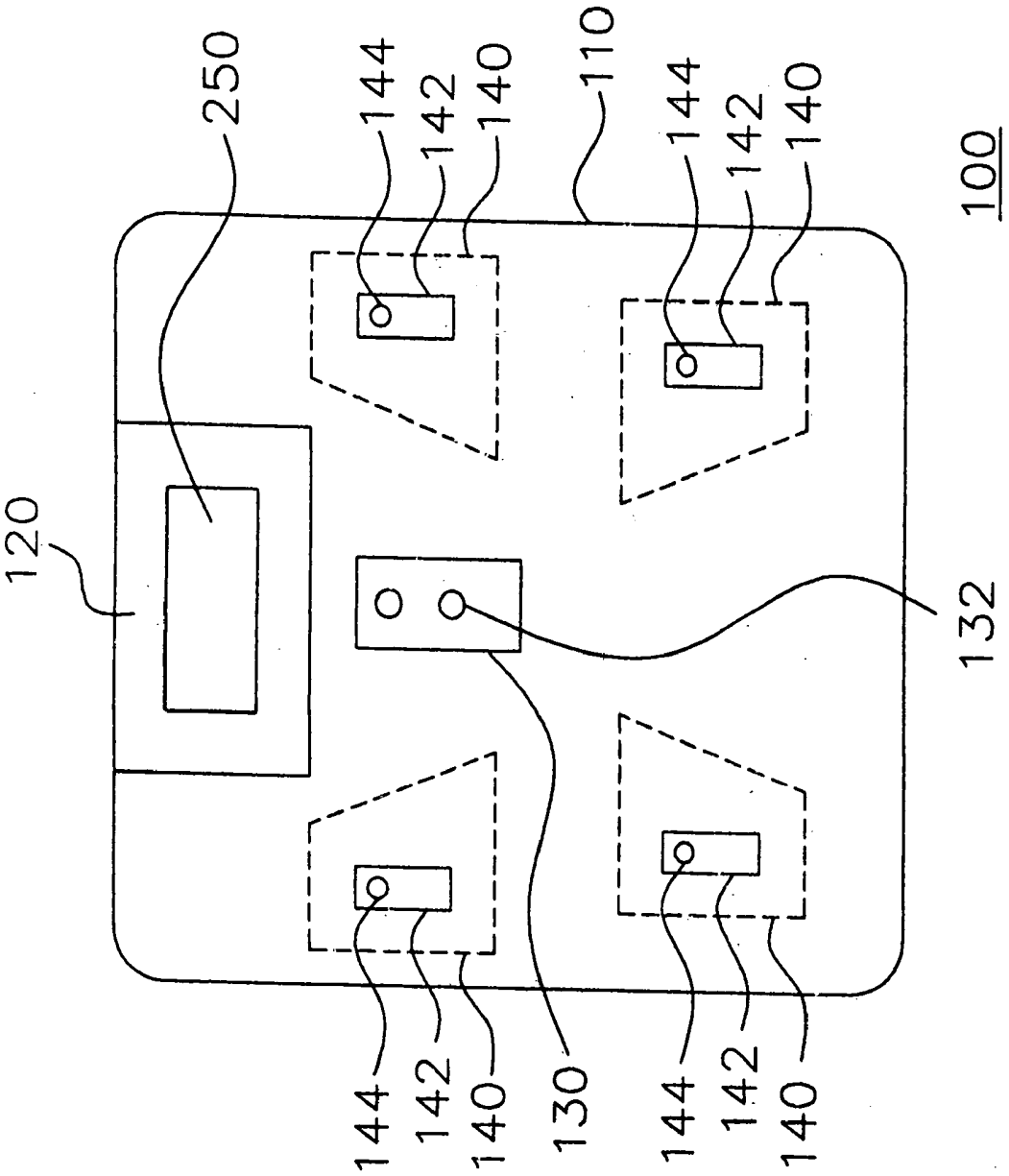
250
144
142
140
110
144
142
140
100
120
132
144
142
140
130
144
142
140

FIG. 1

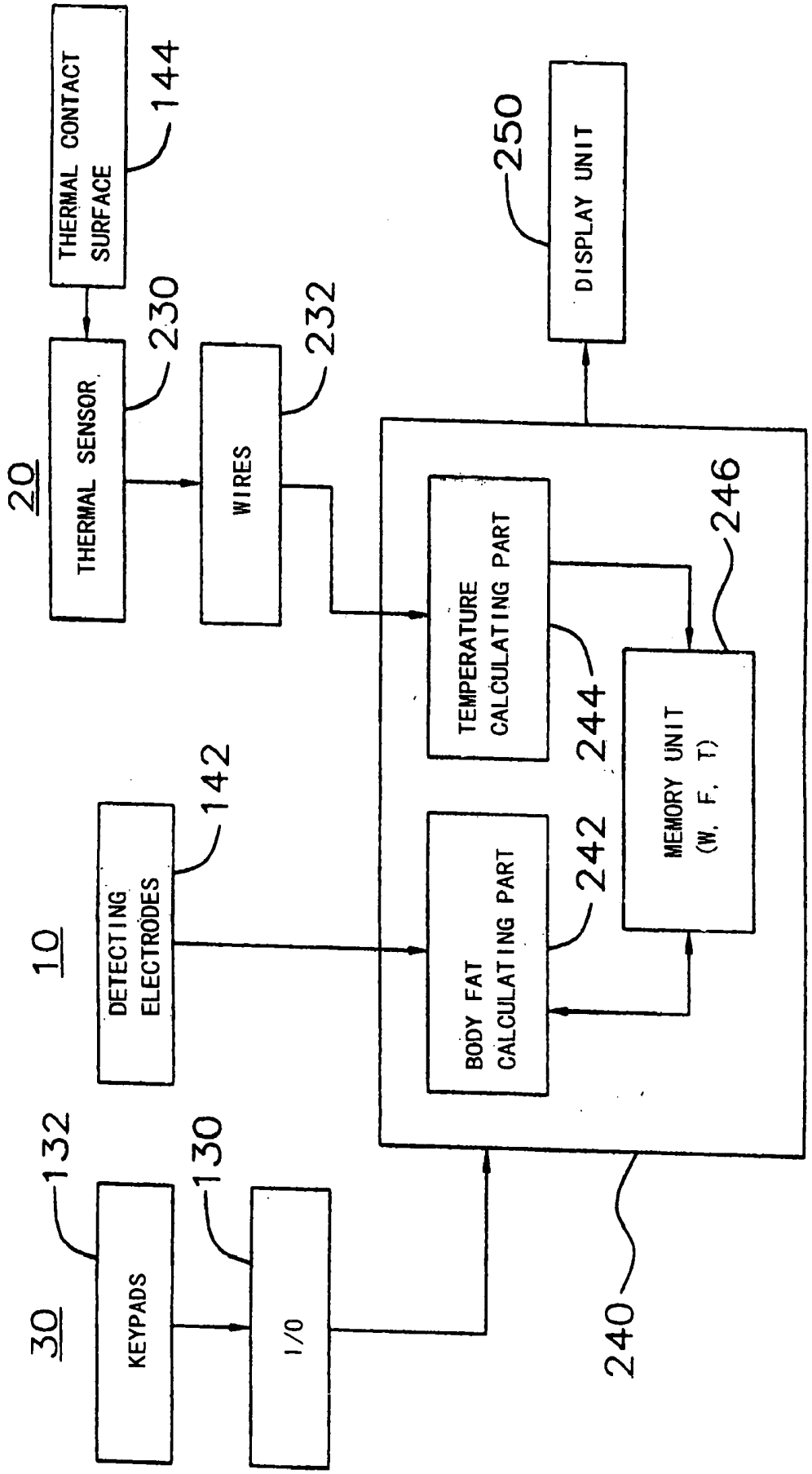
THERMAL CONTACT SURFACE
144
THERMAL SENSOR
230
20
WIRES
232
DISPLAY UNIT
250
TEMPERATURE CALCULATING PART
244
MEMORY UNIT (W, F, T)
246
DETECTING ELECTRODES
142
10
BODY FAT CALCULATING PART
242
KEYPADS
132
30
I/O
130
240

FIG. 2

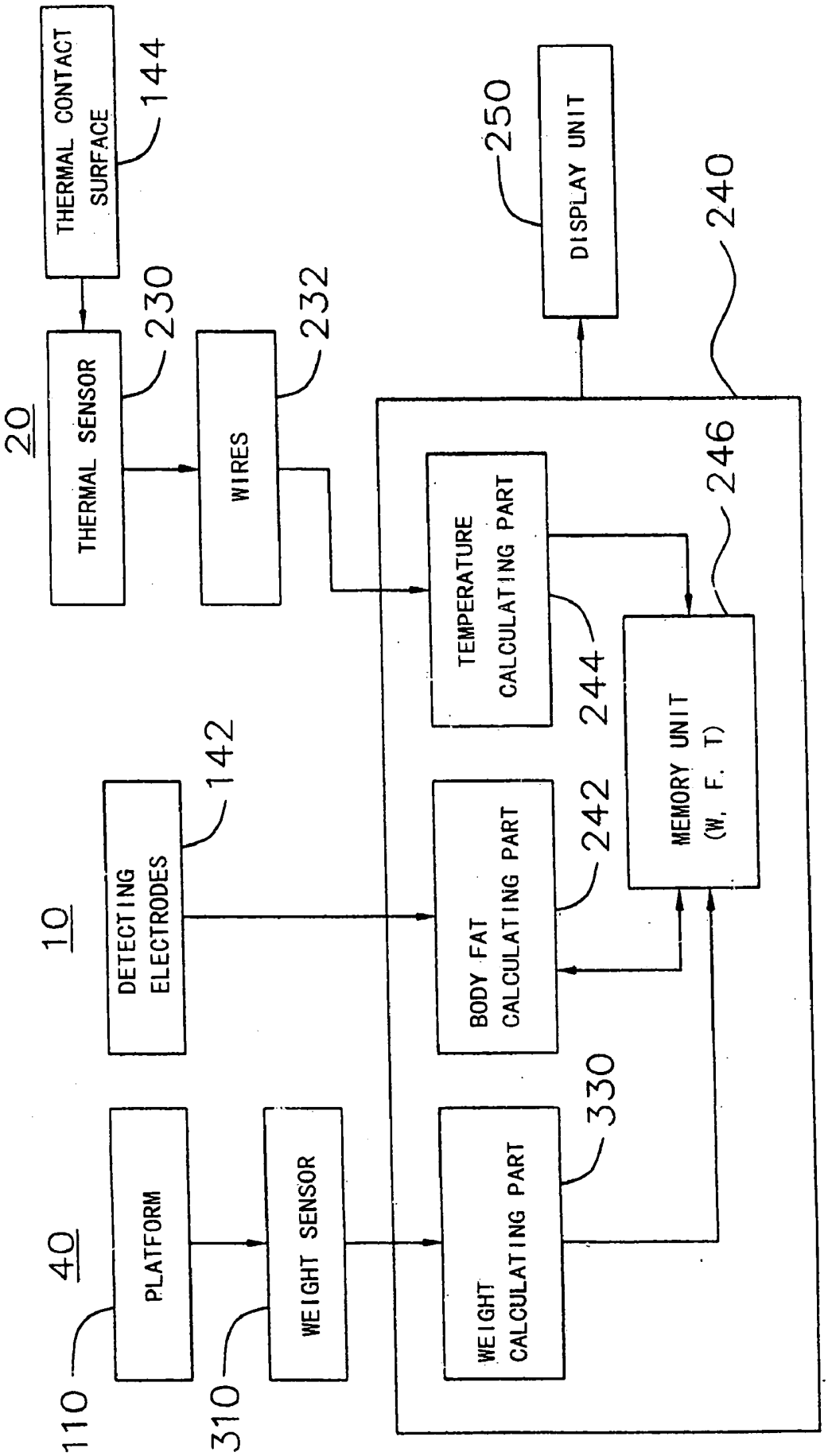
THERMAL CONTACT SURFACE
144
20
THERMAL SENSOR
230
WIRES
232
250
DISPLAY UNIT
240
246
TEMPERATURE CALCULATING PART
244
MEMORY UNIT (W, F, T)
10
DETECTING ELECTRODES
142
BODY FAT CALCULATING PART
242
40
PLATFORM
110
WEIGHT SENSOR
310
WEIGHT CALCULATING PART
330

FIG. 3

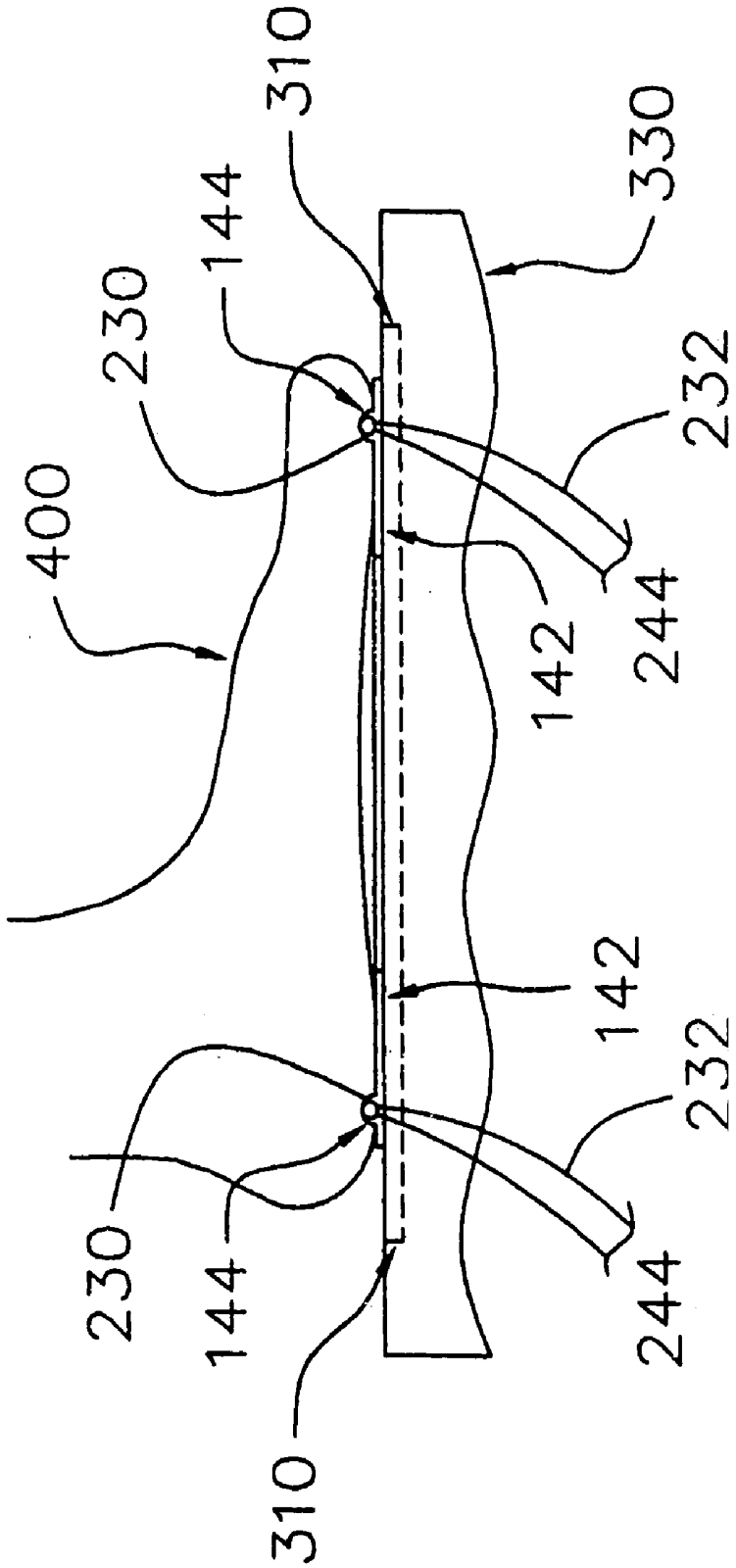

FIG. 4

WEIGHT AND BODY FAT MEASUREMENT DEVICE WITH TEMPERATURE MEASURING CAPABILITY

BACKGROUND OF THE INVENTION

[0001] The invention relates to the field of measurement devices. More particularly, the invention relates to the field of weight or body fat measurement devices.

[0002] Weight or body fat control has become a modern obsession. A weighing instrument with body fat meter is an important tool used by many people in a program of weight and body fat control or management.

[0003] Furthermore, although several prior art scales have attempted to provide one or more of information to the user, there exists a need in the art for a scale that provides the user with several of user-specific health management information.

SUMMARY OF THE INVENTION

[0004] An exemplary embodiment of the present invention overcomes the above-described problems by providing a measurement device that could store or display a user-specific management information at least including a temperature value and one of weight value and body fat value or combination thereof.

[0005] An exemplary embodiment of the invention provides a measurement device including a housing and a display unit mounted on a surface of the housing. A weight measurement unit is disposed in the housing for measuring a load signal and a temperature measurement unit is disposed in the housing for measuring a temperature signal. A controlling unit calculates a body weight value and a body temperature value from the load signal received from the weight measurement unit and the temperature signal received from the temperature measurement unit, and causes a user-specific management information including a weight value and a temperature value to be transmitted to the display unit.

[0006] Another exemplary embodiment of the invention provides a measurement device including a housing and a display unit mounted on a surface of the housing. A body fat measurement unit is disposed in the housing for measuring a bioelectrical impedance signal and a temperature measurement unit is disposed in the housing for measuring a temperature signal. A controlling unit calculates a body fat value and a body temperature value from the bioelectrical impedance signal received from the body fat measurement unit and the temperature signal received from the temperature measurement unit, and causes a user-specific management information including a body fat value and a temperature value to be transmitted to the display unit.

BRIEF DESCRIPTION OF THE DRAWINGS

[0007] The present invention will be described by way of exemplary embodiments, but not limitations, illustrated in the accompanying drawings in which like references denote similar elements, and in which:

[0008] **FIG. 1** illustrates a top view of a measurement device according to an exemplary embodiment of the present invention;

[0009] **FIG. 2** is a block diagram illustrating the components of a measurement device according to an exemplary embodiment of the present invention;

[0010] **FIG. 3** is a block diagram illustrating the components of a measurement device according to an exemplary embodiment of the present invention; and

[0011] **FIG. 4** illustrates a perspective view of a measurement device according to an exemplary embodiment of the present invention.

DETAILED DESCRIPTION OF THE INVENTION

[0012] Various aspects of the system and method of the present invention will be described, and for purposes of explanation, specific configurations and details are set forth in order to provide a thorough understanding of the present invention. However, it will be apparent to one skilled in the art that the present invention may be practiced without these specific details. Furthermore, well known features have been omitted or simplified in order to prevent obscuring the present invention.

[0013] **FIG. 1** illustrates the upper surface of measurement device such as digital scale **100**, and the various components mounted on its housing **110**, according to an exemplary embodiment of the present invention. A platform is disposed on the upper surface of the housing **110**. Housing **110** may be constructed of metal or a reinforced plastic, such as glass or carbon-filled polymers. The platform substantially includes, for example, a display area **120** and sensing areas **140**. A display unit **250** is mounted on the display area **120** and sensing devices **142**, **144** and **310** are disposed on or under the sensing are a **140**.

[0014] What are suitably disposed within housing **110** are a weight measurement unit **40** for measuring a load signal, a body fat measurement unit **10** for measuring a bioelectrical impedance signal and a temperature measurement unit **20** for measuring a body temperature signal, further depicted in **FIG. 3**.

[0015] In an exemplary embodiment of the present invention, the weight measurement unit **40** includes the platform and a weight sensor **310** disposed under the weighing platform for sensing the load signal. Typically, the weight sensor **310** could be a load sensing device including standard loadcell technology employed to measure weight. And a body weight value W is calculated by, for example, a weight calculating part **330** of a controlling unit **240** such as a central processing unit (CPU).

[0016] In this exemplary embodiment of the present invention, the body fat measurement unit **10** includes detecting electrodes **142** on the platform for measuring a bioelectrical impedance signal. Typically, in a body fat calculating part **242** of the controlling unit **240**, the bioelectrical impedance signal is calculated by a four terminal electrode process. And the body fat value F is calculated by the body fat calculating part **242** based on the body weight value W and personal data such as sexuality and body height. The body fat value F could include the proportion of body fat, the weight of the body fat and the degree of obesity.

[0017] Referring to **FIG. 1** and **FIG. 2**, in an exemplary embodiment of the present invention, the body weight value

W and the personal physical data such as sexuality and body height could be obtained from an input unit **30** or memory unit **246** of the controlling unit **240**. Typically, the input unit **30** could include keypads **132** and an input/output component (I/O) **130**. Each of the keypads **132** is electrically coupled to the standard input/output component (I/O) **130**, such as an analog to digital (A/D) converter. I/O **130** is coupled, for example, to CPU **240** directly or via common data bus. Thus, a user inputs information by actuating the keypads **132** which send appropriate signals to I/O device **130**. I/O device **130** translates these signals into digital physical data which are sent to CPU **240**.

[**0018**] Referring to **FIG. 1-FIG. 4**, in an exemplary embodiment of the present invention, the temperature measurement unit **20** includes a thermal contact surface **144**, a thermal sensor **230** and a set of wires **232**. The thermal contact surface **144** is disposed on the upper surface of the housing **110** and could be located on the detecting electrodes. The thermal sensor **2230** is disposed within the thermal contact surface **144** for sensing the body temperature signal such as user's foot temperature signal. And the set of wires **232** are connected to the thermal sensor **230** for passing the body temperature signal to a body temperature calculating part **244** of the controlling unit **240**.

[**0019**] Typically, the temperature measurement unit **20** could include an electronic thermometer or an infrared thermometer employed to measure temperature of user's body or foot **400**. And a body temperature value T is calculated by, for example, a temperature calculating part **244** of the controlling unit **240**. In an exemplary embodiment of the invention, the thermal contact surface **144** could include a collecting window made of a material transparent to heat radiation. By directly contacting the collecting window to an area such as the user's foot, the heat radiation emitted therefrom is collected. An infrared sensor could receive the heat radiation, which is then converted into the corresponding temperature signal transmitted to the controlling unit **240**.

[**0020**] Thus, the controlling unit **240** could calculate the body temperature value T, the body weight value W or the body fat value F from the temperature signal received from the body fat measurement unit **10**, the load signal received from the weight measurement unit **40** and the bioelectrical impedance signal received from the body fat measurement unit **10**.

[**0021**] Therefore, the controlling unit **240** could cause a user-specific management information including the body weight value W, the body fat value F and the body temperature value T to be transmitted to a display unit **250** or stored in the memory unit **246** thereof.

[**0022**] Typically, CPU **240** could include a conventional microprocessor or a microcontroller. The user-specific control information is output to digital display **250** disposed on the display area **120**, which is coupled to CPU **240** via a common data bus.

[**0023**] In addition to what mentioned above, typically, the inputted physical data could further include blood pressure or blood sugar, and the other user's body health information. Then, the physical data could be recorded in the memory unit **246** and merged into the user-specific control information.

[**0024**] Because the measurement device **100** could provide user-specific control information such as the foot temperature value and the weight or body fat value, it naturally provides a new home test that may help reduce the complications of diabetes. The monitors the skin temperature of feet to reduce complications including ulcers, fractures, and amputations.

[**0025**] The device could be used to provide objective information to patients so they would have an early warning sign of inflammation and tissue injury as part of a daily foot self-examination. Home temperature monitoring may be a useful adjunct to a comprehensive ulcer and amputation prevention program for patients at high risk for these complications.

[**0026**] While the invention has been described by way of example and in terms of the preferred embodiments, it is to be understood that the invention is not limited to the disclosed embodiments. To the contrary, it is intended to cover various modifications and similar arrangements as would be apparent to those skilled in the art. Therefore, the scope of the appended claims should be accorded the broadest interpretation so as to encompass all such modifications and similar arrangements.

What is claimed is:

1. A measurement device comprising:

a housing;

a weight measurement unit disposed in the housing for measuring a load signal;

a temperature measurement unit disposed in the housing for measuring a body temperature signal;

a display unit mounted on a surface of the housing; an

a controlling unit disposed in the housing and coupled to the weight measurement unit, the temperature measurement unit and the display unit;

wherein the controlling unit calculates a body weight value and a body temperature value from the load signal received from the weight measurement unit and the body temperature signal received from the temperature measurement unit;

wherein the controlling unit causes a user-specific management information including the body weight value and the body temperature value to be transmitted to the display unit.

2. The measurement device as recited in claim 1 wherein the weight measurement unit comprises:

a weighing platform disposed on an upper surface of the housing; and

a weight sensor disposed under the weighing platform for sensing the load signal.

3. The measurement device as recited in claim 1 wherein the temperature measurement unit is an electronic thermometer or an infrared thermometer.

4. The measurement device as recited in claim 1 wherein the temperature measurement unit comprises:

a thermal contact surface disposed on an upper surface of the housing;

a thermal sensor disposed within the thermal contact surface, for sensing the body temperature signal; and

a set of wires connected to the thermal sensor for passing the body temperature signal to the controlling unit.

5. The measurement device as recited in claim 1 wherein the controlling unit comprises a memory unit for storing the user-specific management information.

6. A measurement device comprising:

a housing;

a body fat measurement unit disposed in the housing for measuring a bioelectrical impedance signal;

a temperature measurement unit disposed in the housing for measuring a body temperature signal;

a display unit mounted on a surface of the housing; and

a controlling unit disposed in the housing and coupled to the body fat measurement unit, the temperature measurement unit and the display unit;

wherein the controlling unit calculates a body fat value and a body temperature value from the bioelectrical impedance signal received from the body fat measurement unit and the body temperature signal received from the temperature measurement unit;

wherein the controlling unit causes a user-specific management information including the body fat value and the body temperature value to be transmitted to the display unit.

7. The measurement device as recited in claim 6 wherein the temperature measurement unit comprises:

a thermal contact surface with a collecting window, disposed on an upper surface of the housing;

an infrared sensor disposed within the thermal contact surface, for receiving heat radiation from the collecting window, wherein the heat radiation is converted into the body temperature signal; and

a set of wires connected to the infrared sensor for passing the body temperature signal to the controlling unit.

8. The measurement device as recited in claim 6 further comprising an input unit disposed on the surface of the housing for inputting a physical data to the controlling unit, wherein the controlling unit calculates a body fat value from the bioelectrical impedance signal received from the body fat measurement unit and the physical data.

9. The measurement device as recited in claim 6 further comprising a weight measurement unit comprises:

a weighing platform disposed on an upper surface of the housing; and

a weight sensor disposed under the weighing platform for sensing a load signal;

wherein the controlling unit calculates a body fat value from the load signal and the bioelectrical impedance signal.

* * * * *

专利名称(译)	具有温度测量功能的重量和体脂测量装置		
公开(公告)号	US20060030783A1	公开(公告)日	2006-02-09
申请号	US11/016089	申请日	2004-12-17
[标]申请(专利权)人(译)	TSAI CHINGÇ LU HSUEH小号		
申请(专利权)人(译)	TSAI CHINGÇ LU HSUEH小号		
当前申请(专利权)人(译)	TSAI CHINGÇ LU HSUEH小号		
[标]发明人	TSAI CHING CHING LU HSUEH SHUN		
发明人	TSAI, CHING CHING LU, HSUEH SHUN		
IPC分类号	A61B5/05 A61B5/00 A61B5/053		
CPC分类号	A61B5/01 A61B5/4872 A61B5/0537		
优先权	200420088118.6 2004-08-08 CN		
外部链接	Espacenet USPTO		

摘要(译)
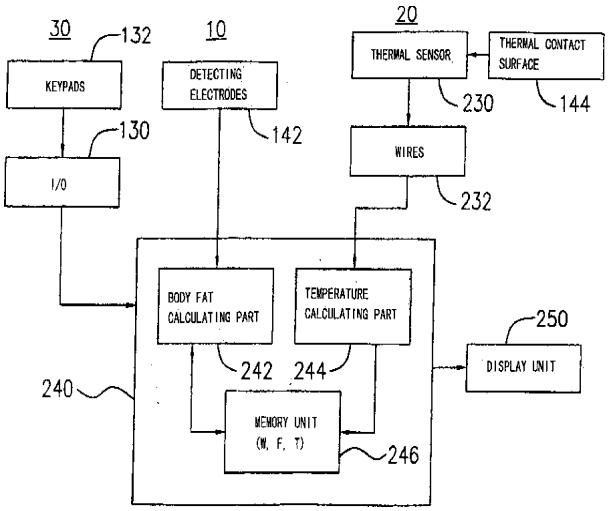
一种测量装置，包括壳体和安装在壳体表面上的显示单元。重量测量单元和体脂测量单元设置在壳体中，用于测量负载信号和生物电阻抗信号。温度测量单元设置在壳体中，用于测量温度信号。控制单元使得包括重量值，体脂值和温度值的用户特定管理信息被发送到显示单元。