(12) INTERNATIONAL APPLICATION PUBLISHED UNDER THE PATENT COOPERATION TREATY (PCT)

(19) World Intellectual Property Organization
International Bureau

(43) International Publication Date
30 October 2003 (30.10.2003)

PCT

(10) International Publication Number
WO 03/088835 A2

(51) International Patent Classification[7]: A61B 5/00

(21) International Application Number: PCT/US03/12555

(22) International Filing Date: 21 April 2003 (21.04.2003)

(25) Filing Language: English

(26) Publication Language: English

(30) Priority Data:

| | | |
|---|---|---|
| 10/127,395 | 19 April 2002 (19.04.2002) | US |
| 10/237,261 | 5 September 2002 (05.09.2002) | US |
| 10/335,215 | 31 December 2002 (31.12.2002) | US |
| 10/335,258 | 31 December 2002 (31.12.2002) | US |
| 10/335,099 | 31 December 2002 (31.12.2002) | US |
| 10/335,219 | 31 December 2002 (31.12.2002) | US |
| 10/335,052 | 31 December 2002 (31.12.2002) | US |
| 10/335,073 | 31 December 2002 (31.12.2002) | US |
| 10/335,220 | 31 December 2002 (31.12.2002) | US |
| 10/335,252 | 31 December 2002 (31.12.2002) | US |
| 10/335,218 | 31 December 2002 (31.12.2002) | US |
| 10/335,211 | 31 December 2002 (31.12.2002) | US |
| 10/335,257 | 31 December 2002 (31.12.2002) | US |
| 10/335,217 | 31 December 2002 (31.12.2002) | US |
| 10/335,212 | 31 December 2002 (31.12.2002) | US |
| 10/335,241 | 31 December 2002 (31.12.2002) | US |
| 10/335,183 | 31 December 2002 (31.12.2002) | US |
| 10/335,082 | 31 December 2002 (31.12.2002) | US |
| 10/335,240 | 31 December 2002 (31.12.2002) | US |
| 10/335,259 | 31 December 2002 (31.12.2002) | US |
| 10/335,182 | 31 December 2002 (31.12.2002) | US |


(71) Applicant *(for all designated States except US)*: **PELIKAN TECHNOLOGIES, INC.** [US/US]; 1072 East Meadow Circle, Palo Alto, CA 94303 (US).

(72) Inventors; and

(75) Inventors/Applicants *(for US only)*: **BOECKER, Dirk** [DE/US]; 1652 Castilleja Avenue, Palo Alto, CA 94306 (US). **ALDEN, Don** [US/US]; 1312 Nelson Way, Sunnyvale, CA 94087 (US). **FREEMAN, Dominique, M.** [GB/US]; 4545 La Honda Road, La Honda, CA 94020 (US).

(74) Agent: **TUNG, Hao, Y.**; Heller, Ehrman White & McAuliffe LLP, 275 Middlefield Road, Menlo Park, CA 94025-3506 (US).

(81) Designated States *(national)*: AE, AG, AL, AM, AT (utility model), AT, AU, AZ, BA, BB, BG, BR, BY, BZ, CA, CH, CN, CO, CR, CU, CZ (utility model), CZ, DE (utility model), DE, DK (utility model), DK, DM, DZ, EC, EE (utility model), EE, ES, FI (utility model), FI, GB, GD, GE, GH, GM, HR, HU, ID, IL, IN, IS, JP, KE, KG, KP, KR, KZ, LC, LK, LR, LS, LT, LU, LV, MA, MD, MG, MK, MN,

*[Continued on next page]*

(54) Title: METHOD AND APPARATUS FOR PENETRATING TISSUE

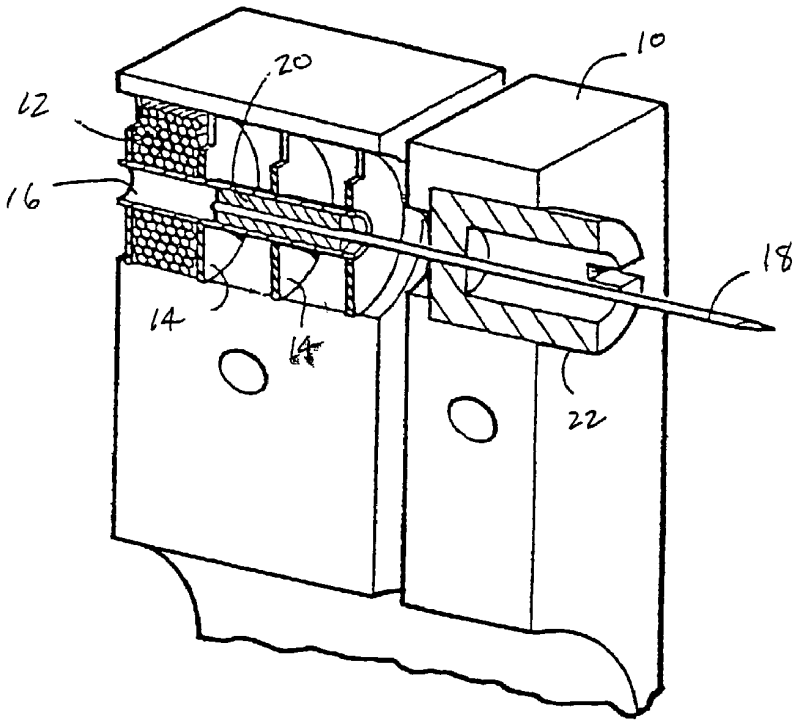


(57) Abstract: A tissue penetration device includes a penetrating member driver and a cartridge. A plurality of penetrating members are integrated with the cartridge. Each penetrating member is coupled to the penetrating member driver when advanced along a path into a tissue target. A penetrating member sensor is coupled to the plurality of penetrating members. The penetrating member sensor is configured to provide information relative to a depth of penetration of penetrating member through a skin surface.

WO 03/088835 A2

MW, MX, MZ, NO, NZ, OM, PH, PL, PT, RO, RU, SC, SD, SE, SG, SK (utility model), SK, SL, TJ, TM, TN, TR, TT, TZ, UA, UG, US, UZ, VC, VN, YU, ZA, ZM, ZW.

**(84) Designated States** *(regional)*: ARIPO patent (GH, GM, KE, LS, MW, MZ, SD, SL, SZ, TZ, UG, ZM, ZW), Eurasian patent (AM, AZ, BY, KG, KZ, MD, RU, TJ, TM), European patent (AT, BE, BG, CH, CY, CZ, DE, DK, EE, ES, FI, FR, GB, GR, HU, IE, IT, LU, MC, NL, PT, RO, SE, SI, SK, TR), OAPI patent (BF, BJ, CF, CG, CI, CM, GA, GN, GQ, GW, ML, MR, NE, SN, TD, TG).

**Published:**

— *without international search report and to be republished upon receipt of that report*

*For two-letter codes and other abbreviations, refer to the "Guidance Notes on Codes and Abbreviations" appearing at the beginning of each regular issue of the PCT Gazette.*

# METHOD AND APPARATUS FOR PENETRATING TISSUE

## BACKGROUND OF THE INVENTION

Lancing devices are known in the medical health-care products industry for piercing the skin to produce blood for analysis. Typically, a drop of blood for this type of analysis is obtained by making a small incision in the fingertip, creating a small wound, which generates a small blood droplet on the surface of the skin.

Early methods of lancing included piercing or slicing the skin with a needle or razor. Current methods utilize lancing devices that contain a multitude of spring, cam and mass actuators to drive the lancet. These include cantilever springs, diaphragms, coil springs, as well as gravity plumbs used to drive the lancet. The device may be held against the skin and mechanically triggered to ballistically launch the lancet. Unfortunately, the pain associated with each lancing event using known technology discourages patients from testing. In addition to vibratory stimulation of the skin as the driver impacts the end of a launcher stop, known spring based devices have the possibility of harmonically oscillating against the patient tissue, causing multiple strikes due to recoil. This recoil and multiple strikes of the lancet against the patient is one major impediment to patient compliance with a structured glucose monitoring regime.

Another impediment to patient compliance is the lack of spontaneous blood flow generated by known lancing technology. In addition to the pain as discussed above, a patient may need more than one lancing event to obtain a blood sample since spontaneous blood generation is unreliable using known lancing technology. Thus the pain is multiplied by the number of tries it takes to successfully generate spontaneous blood flow. Different skin thickness may yield different results in terms of pain perception, blood yield and success rate of obtaining blood between different users of the lancing device. Known devices poorly account for these skin thickness variations.

A still further impediment to improved compliance with glucose monitoring are the many steps and hassle associated with each lancing event. Many diabetic patients that are insulin dependent may need to self-test for blood glucose levels five to six times daily. The large number of steps required in traditional methods of glucose testing, ranging from lancing, to milking of blood, applying blood to the test strip, and getting the measurements from the test strip, discourages many diabetic patients from testing their blood glucose levels as often as recommended. Older patients and those with deteriorating motor skills encounter difficulty

loading lancets into launcher devices, transferring blood onto a test strip, or inserting thin test strips into slots on glucose measurement meters. Additionally, the wound channel left on the patient by known systems may also be of a size that discourages those who are active with their hands or who are worried about healing of those wound channels from testing their glucose levels.

## SUMMARY OF THE INVENTION

Accordingly, an object of the present invention is to provide improved tissue penetrating systems, and their methods of use.

Another object of the present invention is to provide tissue penetrating systems, and their methods of use, that provide reduced pain when penetrating a target tissue.

Yet another object of the present invention is to provide tissue penetrating systems, and their methods of use, that provide controlled depth of penetration.

Still a further object of the present invention is to provide tissue penetrating systems, and their methods of use, that provide controlled velocities into and out of target tissue.

A further object of the present invention is to provide tissue penetrating systems, and their methods of use, that provide stimulation to a target tissue.

Another object of the present invention is to provide tissue penetrating systems, and their methods of use, that apply a pressure to a target tissue.

Yet another object of the present invention is to provide tissue penetrating systems, and their methods of use, with penetrating members that remain in sterile environments prior to launch.

Still another object of the present invention is to provide tissue penetrating systems, and their methods of use, with penetrating members that remain in sterile environments prior to launch, and the penetrating members are not used to breach the sterile environment.

A further object of the present invention is to provide improved tissue penetrating systems, and their methods of use, that have user interfaces.

Another object of the present invention is to provide improved tissue penetrating systems, and their methods of use, that have human interfaces.

Yet another object of the present invention is to provide tissue penetrating systems, and their methods of use, that have low volume sample chambers.

Still another object of the present invention is to provide tissue penetrating systems, and their methods of use, that have sample chambers with volumes that do not exceed 1 μL.

Another object of the present invention is to provide tissue penetrating systems, and their methods of use, that have multiple penetrating members housed in a cartridge. At least some of these and other objectives described herein will be met by embodiments of the present invention.

In one embodiment of the present invention, a tissue penetration device includes a penetrating member driver and a cartridge. A plurality of penetrating members are integrated with the cartridge. Each penetrating member is coupled to the penetrating member driver when advanced along a path into a tissue target. A penetrating member sensor is coupled to the plurality of penetrating members. The penetrating member sensor is configured to provide information relative to a depth of penetration of a penetrating member through a skin surface.

In another embodiment of the present invention, a tissue penetrating system includes a plurality of penetrating members coupled to a penetrating member driver. A cartridge transport device is included. A plurality of cartridges are provided, each being associated with a penetrating member. The cartridge transport device is configured to move each cartridge to a position aligning a penetrating member with the penetrating member driver to drive the penetrating member along a path into a target tissue site.

In another embodiment of the present invention, a tissue penetrating device includes a penetrating member. A penetrating member driver is coupled to the penetrating member. A penetrating member sensor is coupled to the penetrating member. The penetrating member sensor is configured to provide information relative to a depth of penetration of a penetrating member through a skin surface. A processor is coupled to the penetrating member sensor. The processor produces a signal indicative of a change in direction and magnitude of force exerted on the penetrating member. The processor is further configured to cause application of a braking force to the penetrating member.

In another embodiment of the present invention, a skin penetrating device includes a penetrating member driver. A penetrating member is coupled to the penetrating member driver. A damper is coupled to the penetrating member driver for preventing multiple oscillations of the penetrating member in the tissue target once the penetrating member has reached a desired depth.

In another embodiment of the present invention, a method of penetrating a target tissue advances a penetrating member through the target tissue. The penetrating member is stopped at a desired depth below a skin surface without multiple oscillations against the skin surface. The penetrating member is withdrawn from the target tissue.

In another embodiment of the present invention, a method of penetrating a target tissue provides a tissue penetrating system that includes a penetrating member driver, a plurality of

cartridges, a plurality of penetrating members each associated with a cartridge, a plurality of sample chambers each associated with a penetrating member, and a penetrating member sensor. A penetrating member is advanced from a cartridge into the target tissue. The penetrating member is withdrawn from the target tissue. An analyte sample is received in a sample chamber.

These and other objects of the present invention are achieved in a body fluid sampling system for use on a tissue site that includes an electrically powered drive force generator. A penetrating member is operatively coupled to the force generator. The force generator moves the member along a path out of a housing having a penetrating member exit, into the tissue site, stops in the tissue site, and withdraws out of the tissue site. An analyte detecting member is positioned to receive fluid from a wound created by the penetrating member. The detection member is configured to determine a concentration of an analyte in the fluid using a sample of less than 1 μL of the fluid.

In another embodiment of the present invention, a body fluid sampling system for use on a tissue site includes an electrically powered drive force generator. A penetrating member is operatively coupled to the force generator. The force generator moves the member along a path out of a housing having a penetrating member exit, into the tissue site, stops in the tissue site, and withdraws out of the tissue site. An analyte detecting member is positioned to receive fluid from a wound created by the penetrating member. The detection member is configured to determine a concentration of an analyte in the fluid using a sample of less than 1 μL of the fluid.

In another embodiment of the present invention, a body fluid sampling system for use on a tissue site includes a drive force generator. A penetrating member is operatively coupled to the force generator. The force generator moves the member along a path out of a housing having a penetrating member exit, into the tissue site, stops in the tissue site, and withdraws out of the tissue site. The drive force generator is configured to be controlled to follow a predetermined velocity trajectory into the tissue and out of the tissue. An analyte detecting member is positioned to receive fluid from a wound created by the penetrating member. The detection member is configured to determine a concentration of an analyte in the fluid using a sample of less than 1 μL of the fluid.

In another embodiment of the present invention, a body fluid sampling system for use on a tissue site includes a drive force generator. A penetrating member is operatively coupled to the force generator. The force generator moves the member along a path out of a housing having a penetrating member exit, into the tissue site, stops in the tissue site, and withdraws out of the tissue site. A position sensor is positioned to provide an indication of a position of the

penetrating member during actuation. An analyte detecting member is positioned to receive fluid from a wound created by the penetrating member. The detection member is configured to determine a concentration of an analyte in the fluid using a sample of less than 1 μL of the fluid.

In another embodiment of the present invention, a body fluid sampling system for use on a tissue site includes a drive force generator. A penetrating member is operatively coupled to the force generator. The force generator moves the member along a path out of a housing having a penetrating member exit, into the tissue site, stops in the tissue site, and withdraws out of the tissue site. The penetrating member is an elongate member without a molded attachment. A coupler, on the force generator, is configured to engage at least a portion of the elongate portion of the penetrating member and drive the member along a path into a tissue site and withdrawn from a tissue site. An analyte detecting member is positioned to receive fluid from a wound created by the penetrating member. The detection member is configured to determine a concentration of an analyte in the fluid using a sample of less than 1 μL of the fluid.

In another embodiment of the present invention, a body fluid sampling system for use on a tissue site includes a drive force generator. A plurality of cartridges each contain a penetrating member. Each cartridge is coupled together to define a flexible array. A transport device moves each of the cartridges into a launch position to operatively couple the penetrating member to the force generator. An analyte detecting member is positioned to receive fluid from a wound created by the penetrating member. The detection member is configured to determine a concentration of an analyte in the fluid using a sample of less than 1 μL of the fluid.

In another embodiment of the present invention, a body fluid sampling system for use on a tissue site includes a drive force generator. A penetrating member has an elongate portion without a molded attachment and is operatively coupled to the force generator. A sterility enclosure covers at least a tip of the penetrating member. The sterility enclosure is removed from the penetrating member prior to actuation of the member and positioned so that the penetrating member will not contact the enclosure during actuation. An analyte detecting member is positioned to receive fluid from a wound created by the penetrating member. The detection member is configured to determine a concentration of an analyte in the fluid using a sample of less than 1 μL of the fluid.

In another embodiment of the present invention, a body fluid sampling system for use on a tissue site includes a drive force generator. A penetrating member has an elongate portion without a molded attachment and is operatively coupled to the force generator. A sterility enclosure creates a sterile environment around at least a tip of the penetrating member. The

penetrating member breaches the sterile environment during actuation. An analyte detecting member is positioned to receive fluid from a wound created by the penetrating member. The detection member is configured to determine a concentration of an analyte in the fluid using a sample of less than 1 μL of the fluid.

In another embodiment of the present invention, a body fluid sampling system for use on a tissue site includes a drive force generator. A penetrating member has an elongate portion without a molded attachment and is operatively coupled to the force generator. A sterility enclosure creates a sterile environment around at least a tip of the penetrating member. The penetrating member breaches the sterile environment during actuation. An analyte detecting member is positioned to receive fluid from a wound created by the penetrating member. The detection member is configured to determine a concentration of an analyte in the fluid using a sample of less than 1 μL of the fluid.

In another embodiment of the present invention, a body fluid sampling system for use on a tissue site includes a drive force generator. A penetrating member is operatively coupled to the force generator. The force generator moves the member along a path out of a housing having the a penetrating member exit, into the tissue site, stops in the tissue site, and withdraws out of the tissue site. A skin stabilizer device is suitable for stretching a surface of a tissue site. The skin stabilizer at least partially surrounds the penetrating member exit. An analyte detecting member is positioned to receive fluid from a wound created by the penetrating member. The detection member is configured to determine a concentration of an analyte in the fluid using a sample of less than 1 μL of the fluid.

In another embodiment of the present invention, a body fluid sampling system for use on a tissue site includes a drive force generator. A penetrating member is operatively coupled to the force generator. The force generator moves the member along a path out of a housing having the a penetrating member exit, into the tissue site, stops in the tissue site, and withdraws out of the tissue site. A user interface transmits at least one input between a user. An analyte detecting member is positioned to receive fluid from a wound created by the penetrating member. The detection member is configured to determine a concentration of an analyte in the fluid using a sample of less than 1 μL of the fluid.

These and other objects of the present invention are achieved in a body fluid sampling system for use on a tissue site that includes a drive force generator and a penetrating member operatively coupled to the force generator. The force generator moves the member along a path out of a housing with a penetrating member exit, into the tissue site, stops in the tissue site, and

withdraws out of the tissue site. The drive force generator is configured to be controlled to follow a predetermined velocity trajectory into the tissue and out of the tissue. A tissue stabilizing member is associated with the device and at least partially surrounds an impact location of the penetrating member on the tissue site.

In another embodiment of the present invention, a body fluid sampling system for use on a tissue site includes a housing and an electrically powered drive force generator. A penetrating member is operatively coupled to the force generator. The force generator moves the member along a path out of the housing with a penetrating member exit, into the tissue site, stops in the tissue site, and withdraws out of the tissue site. A skin stabilizing member is associated with the housing and positioned to at least partially surround an impact location of the penetrating member on the tissue site.

In another embodiment of the present invention, a body fluid sampling system for use on a tissue site includes a drive force generator and a penetrating member operatively coupled to the force generator. The force generator moves the member along a path out of a housing with a penetrating member exit, into the tissue site, stops in the tissue site, and withdraws out of the tissue site. A position sensor is used to determine a position of the penetrating member during actuation. A skin stabilizing member is associated with the housing and positioned to at least partially surround an impact location of the penetrating member on the tissue site.

In another embodiment of the present invention, a body fluid sampling system for use on a tissue site includes a drive force generator and a penetrating member operatively coupled to the force generator. The force generator moves the member along a path out of a housing with a penetrating member exit, into the tissue site, stops in the tissue site, and withdraws out of the tissue site. The penetrating member is an elongate member without a molded attachment. A coupler, on the force generator, is configured to engage at least a portion of the elongate portion of the penetrating member and drive the member along a path into a tissue site and withdrawn from a tissue site. A skin stabilizing member is associated with the housing and positioned to at least partially surround an impact location of the penetrating member on the tissue site

In another embodiment of the present invention, a body fluid sampling system for use on a tissue site includes a voice coil drive force generator and a plurality of modules, each containing a penetrating member. Each of the modules is coupled together to define a flexible array. A transport device moves each of the modules into a launch position to operatively couple the penetrating member to the force generator. A skin stabilizing member is associated with the

housing and positioned to at least partially surround an impact location of the penetrating member on the tissue site.

In another embodiment of the present invention, a body fluid sampling system for use on a tissue site includes a drive force generator. A penetrating member is provided that has an elongate portion without a molded attachment and is operatively coupled to the force generator. A sterility enclosure covers at least a tip of the penetrating member. The sterility enclosure is removed from the penetrating member prior to actuation of the member and positioned so that the penetrating member will not contact the enclosure during actuation. A skin stabilizing member is associated with the housing and positioned to at least partially surround an impact location of the penetrating member on the tissue site.

In another embodiment of the present invention, a body fluid sampling system for use on a tissue site includes a drive force generator. A penetrating member has an elongate portion without a molded attachment and is operatively coupled to the force generator. A sterility enclosure creates a sterile environment around at least a tip of the penetrating member. The penetrating member breaches the sterile environment during actuation. A skin stabilizing member is associated with the housing and positioned to at least partially surround an impact location of the penetrating member on the tissue site.

In another embodiment of the present invention, a body fluid sampling system for use on a tissue site includes a drive force generator. A penetrating member is operatively coupled to the force generator. The force generator moves the member along a path out of a housing with a penetrating member exit, into the tissue site, stops in the tissue site, and withdraws out of the tissue site. An analyte detection member is positioned to receive fluid from a wound created by the penetrating member. The detection member is configured to determine a concentration of an analyte in the fluid using a sample of less than 1 μL of the fluid. A skin stabilizing member is associated with the housing and positioned to at least partially surround an impact location of the penetrating member on the tissue site.

In another embodiment of the present invention, a body fluid sampling system for use on a tissue site includes an electrically powered drive force generator. A penetrating member is operatively coupled to the force generator. The force generator moves the member along a path out of a housing with a penetrating member exit, into the tissue site, stops in the tissue site, and withdraws out of the tissue site. A vacuum source is associated with the device for creating a lower atmosphere environment to draw fluid from a wound created by the penetrating member.

In another embodiment of the present invention, a body fluid sampling system for use on a tissue site includes an electrically powered drive force generator. A penetrating member is operatively coupled to the force generator. The force generator moves the member along a path out of a housing with a penetrating member exit, into the tissue site, stops in the tissue site, and withdraws out of the tissue site. A movable capillary tube is advancable between a first position and a second position.

These and other objects of the present invention are achieved in a body fluid sampling system for use on a tissue site that includes a voice coil based penetrating member driver. A plurality of penetrating members are included. A transport mechanism is configured to engage the cartridges. Each of the cartridges is operatively engaged with the penetrating member driver when moved into position by the transport mechanism.

In another embodiment of the present invention, a body fluid sampling system for use on a tissue site includes a voice coil based penetrating member driver. A plurality of penetrating members are provided. A transport mechanism is configured to engage the cartridges. Each of the cartridges is operatively engaged with the penetrating member driver when moved into position by the transport mechanism.

In another embodiment of the present invention, a body fluid sampling system for use on a tissue site, the system includes a voice coil drive force generator. A penetrating member has an elongate portion without a molded attachment. A coupler, on the force generator, is configured to engage at least a portion of the elongate portion of the penetrating member and drive the member along a path into a tissue site and withdrawn from a tissue site.

In another embodiment of the present invention, a body fluid sampling system for use on a tissue site includes a voice coil drive force generator. A penetrating member has an elongate portion without a molded attachment and is operatively coupled to the force generator. A sterility enclosure covers at least a tip of the penetrating member. The sterility enclosure is removed from the penetrating member prior to actuation of the member and positioned so that the penetrating member will not contact the enclosure during actuation.

In another embodiment of the present invention, a body fluid sampling system for use on a tissue site includes a voice coil drive force generator. A penetrating member has an elongate portion without a molded attachment and is operatively coupled to the force generator. A sterility enclosure creates a sterile environment around at least a tip of the penetrating member. The penetrating member breaches the sterile environment during actuation.

In another embodiment of the present invention, a body fluid sampling system for use on a tissue site includes a voice coil drive force generator. A penetrating member is operatively coupled to the force generator. The force generator moves the member along a path out of a housing having a penetrating member exit, into the tissue site, stops in the tissue site, and withdraws out of the tissue site. A tissue stabilizer device, suitable for stretching a surface of a tissue site, at least partially surrounds the penetrating member exit.

In another embodiment of the present invention, a body fluid sampling system for use on a tissue site includes a voice coil drive force generator. A penetrating member is operatively coupled to the force generator. The force generator moves the member along a path out of a housing having a penetrating member exit, into the tissue site, stops in the tissue site, and withdraws out of the tissue site. A pressure applicator is coupled to the housing.

In another embodiment of the present invention, a body fluid sampling system for use on a tissue site includes a voice coil drive force generator. A penetrating member is operatively coupled to the force generator. The force generator moves the member along a path out of a housing having a penetrating member exit, into the tissue site, stops in the tissue site, and withdraws out of the tissue site. An analyte detection member is positioned to receive fluid from a wound created by the penetrating member. The detection member is configured to determine a concentration of an analyte in the fluid using a sample of less than 1 μL of the fluid.

In another embodiment of the present invention, a body fluid sampling system for use on a tissue site includes a voice coil drive force generator. A penetrating member is operatively coupled to the force generator. The force generator moves the member along a path out of a housing having a penetrating member exit, into the tissue site, stops in the tissue site, and withdraws out of the tissue site. An analyte detection member is positioned to receive fluid from a wound created by the penetrating member. The detection member is configured to determine a concentration of an analyte in the fluid using a sample of less than 1 μL of the fluid.

These and other objects of the present invention are achieved in a body fluid sampling system for use on a tissue site that includes a single drive force generator. A plurality of penetrating members are operatively coupled to the force generator. The force generator moves each of the members along a path out of a housing with a penetrating member exit, into the tissue site, stops in the tissue site, and withdraws out of the tissue site. A flexible support member couples the penetrating members to define a linear array. The support member is movable and configured to move each of the penetrating members to a launch position associated with the force generator.

In another embodiment of the present invention, a body fluid sampling system for use on a tissue site includes a drive force generator. A plurality of penetrating members are operatively coupled to the force generator. The force generator moves each of the members along a path out of a housing with a penetrating member exit, into the tissue site, stops in the tissue site, and withdraws out of the tissue site. A flexible support member couples the penetrating members to define a linear array. The support member is movable and configured to move each of the penetrating members to a launch position associated with the force generator. The drive force generator is configured to be controlled to follow a predetermined velocity trajectory into the tissue and out of the tissue.

In another embodiment of the present invention, a body fluid sampling system for use on a tissue site includes a drive force generator. A plurality of penetrating members are operatively coupled to the force generator. The force generator moves each of the members along a path out of a housing with a penetrating member exit, into the tissue site, stops in the tissue site, and withdraws out of the tissue site. A flexible support member couples the penetrating members to define a linear array. The support member is movable and configured to move each of the penetrating members to a launch position associated with the force generator. A position sensor is configured to provide an indication of a position of the penetrating member during actuation.

In another embodiment of the present invention, a body fluid sampling system for use on a tissue site includes a drive force generator. A plurality of penetrating members are operatively coupled to the force generator. The force generator moves each of the members along a path out of a housing with a penetrating member exit, into the tissue site, stops in the tissue site, and withdraws out of the tissue site. A flexible support member couples the penetrating members to define a linear array. The support member is movable and configured to move each of the penetrating members to a launch position associated with the force generator. The penetrating member is an elongate member without a molded attachment. A coupler, on the force generator, is configured to engage at least a portion of the elongate portion of the penetrating member and drive the member along a path into a tissue site and withdrawn from a tissue site.

In another embodiment of the present invention, a body fluid sampling system for use on a tissue site includes an electrically powered drive force generator. A plurality of cartridges are provided, each containing a penetrating member. Each of the cartridges is coupled together to define a flexible array. A transport device moves each of the cartridges into a launch position to operatively couple the penetrating member to the force generator. A flexible support member

couples the cartridges to define a linear array. The support member is movable and configured to move each of the cartridges to the launch position associated with the force generator.

In another embodiment of the present invention, a body fluid sampling system for use on a tissue site includes a drive force generator. A plurality of penetrating members are operatively coupled to the force generator. The force generator moves each of the members along a path out of a housing with a penetrating member exit, into the tissue site, stops in the tissue site, and withdraws out of the tissue site. A flexible support member couples the penetrating members to define a linear array. The support member is movable and configured to move each of the penetrating members to a launch position associated with the force generator. A sterility enclosure covers at least a tip of the penetrating member. The sterility enclosure is removed from the penetrating member prior to actuation of the member and positioned so that the penetrating member will not contact the enclosure during actuation.

In another embodiment of the present invention, a body fluid sampling system for use on a tissue site includes a drive force generator. A plurality of penetrating members are operatively coupled to the force generator. The force generator moves each of the members along a path out of a housing with a penetrating member exit, into the tissue site, stops in the tissue site, and withdraws out of the tissue site. A flexible support member couples the penetrating members to define a linear array. The support member is movable and configured to move each of the penetrating members to a launch position associated with the force generator. A sterility enclosure creates a sterile environment around at least a tip of the penetrating member. The penetrating member breaches the sterile environment during actuation.

In another embodiment of the present invention, a body fluid sampling system for use on a tissue site includes a drive force generator. A plurality of penetrating members are operatively coupled to the force generator. The force generator moves each of the members along a path out of a housing with a penetrating member exit, into the tissue site, stops in the tissue site, and withdraws out of the tissue site. A flexible support member couples the penetrating members to define a linear array. The support member is movable and configured to move each of the penetrating members to a launch position associated with the force generator. A skin stabilizer device is provided for stretching a surface of a tissue site. The skin stabilizer at least partially surrounds the penetrating member exit.

In another embodiment of the present invention, a body fluid sampling system for use on a tissue site includes a drive force generator. A plurality of penetrating members are operatively coupled to the force generator. The force generator moves each of the members along a path out

of a housing with a penetrating member exit, into the tissue site, stops in the tissue site, and withdraws out of the tissue site. A flexible support member couples the penetrating members to define a linear array. The support member is movable and configured to move each of the penetrating members to a launch position associated with the force generator. An analyte detection member is positioned to receive fluid from a wound created by the penetrating member. The detection member is configured to determine a concentration of an analyte in the fluid using a sample of less than 1 μL of the fluid.

In another embodiment of the present invention, a body fluid sampling system for use on a tissue site includes a drive force generator. A plurality of penetrating members are operatively coupled to the force generator. The force generator moves each of the members along a path out of a housing with a penetrating member exit, into the tissue site, stops in the tissue site, and withdraws out of the tissue site. A flexible support member couples the penetrating members to define a linear array. The support member is movable and configured to move each of the penetrating members to a launch position associated with the force generator. A spool is in contact with at least one portion of the flexible support member. The spool is configured to hold unused portions of the support member in a roll configuration.

These and other objects of the present invention are achieved in a body fluid sampling system for use on a tissue site that includes an electrically powered drive force generator. A penetrating member is operatively coupled to the force generator. The force generator moves the member along a path out of a housing having a penetrating member exit, into the tissue site, stops in the tissue site, and withdraws out of the tissue site. A cartridge houses the penetrating member. The cartridge has first and second seals coupled to the penetrating member to maintain a sterile environment around a portion of the penetration member prior to penetrating member actuation.

In another embodiment of the present invention, a body fluid sampling system for use on a tissue site provides an electrically powered drive force generator. A penetrating member is operatively coupled to the force generator. The force generator moves the member along a path out of a housing having a penetrating member exit, into the tissue site, stops in the tissue site, and withdraws out of the tissue site. A cartridge houses the penetrating member. The cartridge has first and second seals coupled to the penetrating member to maintain a sterile environment around a portion of the penetration member prior to penetrating member actuation.

In another embodiment of the present invention, a body fluid sampling system for use on a tissue site includes a drive force generator. A penetrating member is operatively coupled to the

force generator. The force generator moves the member along a path out of a housing having a penetrating member exit, into the tissue site, stops in the tissue site, and withdraws out of the tissue site. The drive force generator is configured to be controlled to follow a predetermined velocity trajectory into the tissue and out of the tissue. A cartridge houses the penetrating member. The cartridge has first and second seals coupled to the penetrating member to maintain a sterile environment around a portion of the penetration member prior to penetrating member actuation.

In another embodiment of the present invention, a body fluid sampling system for use on a tissue site includes a drive force generator. A penetrating member is operatively coupled to the force generator. The force generator moves the member along a path out of a housing having a penetrating member exit, into the tissue site, stops in the tissue site, and withdraws out of the tissue site. A position sensor is positioned to provide an indication of a position of the penetrating member during actuation. A cartridge houses the penetrating member. The cartridge has first and second seals coupled to the penetrating member to maintain a sterile environment around a portion of the penetration member prior to penetrating member actuation.

In another embodiment of the present invention, a body fluid sampling system for use on a tissue site includes a drive force generator. A penetrating member is operatively coupled to the force generator. The force generator moves the member along a path out of a housing having a penetrating member exit, into the tissue site, stops in the tissue site, and withdraws out of the tissue site. The penetrating member is an elongate member without a molded attachment. A coupler, on the force generator, is configured to engage at least a portion of the elongate portion of the penetrating member, drive the member along a path into a tissue site and withdrawn it from a tissue site. A cartridge houses the penetrating member. The cartridge has first and second seals coupled to the penetrating member to maintain a sterile environment around a portion of the penetration member prior to penetrating member actuation.

In another embodiment, a body fluid sampling system for use on a tissue site includes a drive force generator. A plurality of cartridges each contain a penetrating member. Each of the cartridges is coupled together to define a flexible array. A transport device moves each of the cartridges into a launch position to operatively couple the penetrating member to the force generator. Each cartridge has first and second seals coupled to the penetrating member to maintain a sterile environment around a portion of the penetration member prior to penetrating member actuation.

In another embodiment of the present invention, a body fluid sampling system for use on a tissue site includes a drive force generator. A penetrating member has an elongate portion without a molded attachment and is operatively coupled to the force generator. A sterility enclosure covers at least a tip of the penetrating member. The sterility enclosure is removed from the penetrating member prior to actuation of the member and positioned so that the penetrating member will not contact the enclosure during actuation.

In another embodiment of the present invention, a body fluid sampling system for use on a tissue site includes a drive force generator. A penetrating member has an elongate portion without a molded attachment and is operatively coupled to the force generator. A sterility enclosure creates a sterile environment around at least a tip of the penetrating member. The penetrating member breaches the sterile environment during actuation.

In another embodiment of the present invention, a body fluid sampling system for use on a tissue site includes a drive force generator. A penetrating member is operatively coupled to the force generator. The force generator moves the member along a path out of a housing having a penetrating member exit, into the tissue site, stops in the tissue site, and withdraws out of the tissue site. A skin stabilizer device is provided that is suitable for stretching a surface of a tissue site. The skin stabilizer at least partially surrounds the penetrating member exit. A cartridge houses the penetrating member. The cartridge has first and second seals coupled to the penetrating member to maintain a sterile environment around a portion of the penetration member prior to penetrating member actuation.

In another embodiment of the present invention, a body fluid sampling system for use on a tissue site includes a drive force generator. A penetrating member is operatively coupled to the force generator. The force generator moves the member along a path out of a housing having a penetrating member exit, into the tissue site, stops in the tissue site, and withdraws out of the tissue site. A cartridge houses the penetrating member. The cartridge has first and second seals coupled to the penetrating member to maintain a sterile environment around a portion of the penetration member prior to penetrating member actuation.

In another embodiment of the present invention, a body fluid sampling system for use on a tissue site includes a drive force generator. A penetrating member is operatively coupled to the force generator. The force generator moves the member along a path out of a housing having a penetrating member exit, into the tissue site, stops in the tissue site, and withdraws out of the tissue site. An analyte detection member is positioned to receive fluid from a wound created by the penetrating member. The detection member is configured to determine a concentration of an

analyte in the fluid using a sample of less than 1 μL of the fluid. A cartridge houses the penetrating member. The cartridge has first and second seals coupled to the penetrating member to maintain a sterile environment around a portion of the penetration member prior to penetrating member actuation.

These and other objects of the present invention are achieved in a tissue penetrating system including a plurality of cartridges each with a distal port and a proximal port. A plurality of penetrating members are provided, each coupled to a cartridge and having a sharpened distal tip and a shaft portion slidably disposed within the cartridge. A seal is formed by a fracturable material between the penetrating member and the cartridge. The seal is positioned at one or both of a distal port or a proximal port of the cartridge.

In another embodiment, a tissue penetrating system includes a cartridge with a distal port and a proximal port. A plurality of penetrating members are provided, each with a sharpened distal tip and a shaft portion slidably disposed within the cartridge. A seal is formed by a fracturable material between the penetrating member and the cartridge. The seal is positioned at one or both of a distal port or a proximal port of the cartridge.

In another embodiment of the present invention, a tissue penetrating system includes a cartridge with a distal port and a proximal port, and a sample chamber. A plurality of penetrating members each have a sharpened distal tip and a shaft portion slidably disposed within the cartridge. A first seal is formed at the distal port and a second seal formed at the proximal port. Prior to lancing, the first seal and second seal maintain the distal tip of a penetrating member and the sample chamber in a sterile environment.

In another embodiment of the present invention, a tissue penetrating system includes a cartridge with a distal port and a proximal port, and a plurality of sample chambers. A plurality of penetrating members are provided, each with a sharpened distal tip and a shaft portion slidably disposed within the cartridge. Each penetrating member is associated with a sample chamber. A first seal is formed at the distal port and a second seal is formed at the proximal port. Prior to lancing, the first seal and second seal maintain the distal tip of a penetrating member and the sample chamber in a sterile environment.

In another embodiment of the present invention, a tissue penetrating system includes a cartridge with a distal port and a proximal port, and a plurality of sample chambers. A plurality of penetrating members are provided, each with a sharpened distal tip and a shaft portion slidably disposed within the cartridge. Each penetrating member is associated with a sample chamber. A first seal is formed at the distal port and a second seal is formed at the proximal port. Prior to

lancing, the first seal and second seal maintain the distal tip of a penetrating member and the sample chamber in a sterile environment.

In another embodiment of the present invention, a tissue penetrating system includes a cartridge with a distal port and a proximal port, and a plurality of penetrating members. A plurality of lumens are between the distal port and the proximal port for slidably receiving a penetrating member. A sample chamber is defined by the cartridge and has an opening. A first seal covers the distal port, and a second seal covers the proximal port.

In another embodiment of the present invention, a tissue penetrating system includes a plurality of cartridges. a penetrating member driver and a plurality of penetrating members coupled to the penetrating member driver. Each of penetrating member is associated with a cartridge. A plurality of gas-tightly sealed enclosures are coupled in an array. Each enclosure fully contains at least one of the plurality of cartridges. The sealed enclosures are configured to be advanceable on a transport device that individually releases the cartridges from the enclosures and loads them individually onto the penetrating member driver.

In another embodiment of the present invention, a tissue penetrating system, includes a plurality of penetrating members, each having a sharpened distal tip. A penetrating member driver is provided. A plurality of cartridges are coupled in an array, and each cartridge houses a penetrating member. Each cartridge is configured to permit the penetrating member driver to engage each of the penetrating members sequentially. Each cartridge has a plurality of seals positioned to provide that the sharpened distal tip remains in a sterile environment before penetrating a target site. Each penetrating is launched without breaking a seal.

In another embodiment of the present invention, a tissue penetrating system includes a plurality of cartridges, each with a distal port and a proximal port. A plurality of penetrating members are included. Each penetrating member is associated with a cartridge. Each penetrating member has a sharpened distal tip and a shaft portion slidably disposed within the cartridge. A seal is formed by a fracturable material between the penetrating member and each cartridge. The seal is positioned at one or both of a distal port or a proximal port of the cartridge. A cartridge transport device moves each of the cartridges to a position that aligns the penetrating member with the penetrating member driver so that the penetrating member can be driven along a path into a target tissue.

In another embodiment of the present invention, a method of penetrating a tissue site provides a tissue penetrating system that includes a cartridge, a sample chamber, a penetrating member and at least one seal that maintains the penetrating member in a sterile condition prior to

launch of the penetrating member. At least a portion of the seal is fractured prior to launch of the penetrating member. The penetrating member is launched to a target tissue; and a body fluid is received in the sample chamber of the tissue penetrating system.

These and other objects of the present invention are achieved in a tissue penetrating system with a housing member. A plurality of penetrating members are positioned in the housing member. A tissue stabilizing member is coupled to the housing. A penetrating member sensor is coupled to the plurality of penetrating members. The penetrating member sensor is configured to provide information relative to a depth of penetration of a penetrating member through a skin surface.

In another embodiment of the present invention, a tissue penetrating system includes a housing member and a plurality of penetrating members. A stimulating member is coupled to the housing member and configured to increase blood circulation at a skin surface.

In another embodiment of the present invention, a tissue penetrating system includes a housing member and a plurality of penetrating members. A stimulating vibratory member is coupled to the housing member and configured to apply a vibratory motion to a skin surface.

In another embodiment of the present invention, a method of obtaining a sample of capillary whole blood from a target tissue provides a penetrating system that includes a tissue stabilizing member. Skin stimulation is applied to a skin surface site with the tissue stabilizing member. A penetrating member is introduced through the skin surface site to form an incision. Blood is collected from the incision in the penetrating system.

In another embodiment of the present invention, a tissue penetrating system includes an electromechanical penetrating member driver. A plurality of penetrating members each have a sharpened distal tip. A plurality of cartridges are each associated with a penetrating member and coupled to the penetrating member driver. Each cartridge has a plurality of seals for maintaining the distal tip of the penetrating member in a sterile condition prior to launch. A tissue stabilizing member is coupled to at least one of the cartridges.

In another embodiment of the present invention, a tissue penetrating system includes a penetrating member driver with penetrating member position feedback control. A plurality of penetrating members each have a sharpened distal tip. A plurality of cartridges are each associated with a penetrating member and coupled to the penetrating member driver. Each cartridge has a plurality of seals for maintaining the distal tip of the penetrating member in a sterile condition prior to lancing. A tissue stabilizing member is coupled to at least one of the cartridges.

In another embodiment of the present invention, a tissue penetrating system includes a penetrating member driver with penetrating member position feedback control. A plurality of penetrating members each have a sharpened distal tip. A plurality of cartridges are each associated with a penetrating member and coupled to the penetrating member driver. Each cartridge has a plurality of seals for maintaining the distal tip of the penetrating member in a sterile condition prior to lancing. A cartridge transport device moves each of cartridge to a position to align the penetrating member with the penetrating member driver so that the penetrating member may be driven along a path into the tissue site. A tissue stabilizing member is coupled to at least one of the cartridges.

These and other objects of the present invention are achieved in a tissue penetrating system including a plurality of penetrating members each having a tip. A penetrating member driver is coupled to the plurality of penetrating members. Each tip of a penetrating member is uncovered during launch of the penetrating member by the penetrating member driver. A support is provided with a plurality of openings. Each opening receives a penetrating member.

In another embodiment of the present invention, a tissue penetrating system includes a plurality of penetrating members each having a tip. A penetrating member driver is coupled to the plurality of penetrating members. A support is provided with a plurality of openings. Each opening receives a penetrating member. Each tip of a penetrating member is uncovered during launch of a penetrating member by the penetrating driver member. A penetrating member sensor is coupled to the plurality of penetrating members. The penetrating member sensor is configured to provide information relative to a depth of penetration of a penetrating member through a skin surface.

In another embodiment of the present invention, a tissue penetration device includes a penetrating member driver and a cartridge. A plurality of penetrating members are integrated with the cartridge. Each penetrating member is coupled to the penetrating member driver when advanced along a path into a tissue target. A support is provided with a plurality of openings. Each opening receives a penetrating member. Each tip of a penetrating member is uncovered during launch of a penetrating member by the penetrating driver member.

In another embodiment of the present invention, a tissue penetrating system includes a plurality of penetrating members each having at least a penetrating member tip in its own sterile enclosure. A penetrating member driver is provided. A penetrating member transport transports a penetrating member from a storage area to the penetrating member driver.

In another embodiment of the present invention, a tissue penetrating system includes a plurality of penetrating members each having a penetrating member tip in its own sterile enclosure. A penetrating member driver is provided. A penetrating member transport transports penetrating members from a storage area to the penetrating member driver.

In another embodiment of the present invention, a tissue penetrating system includes a plurality of penetrating members each having at least a penetrating member tip in a sterile enclosure. A support is provided with a plurality of openings, each opening receiving a penetrating member. A penetrating member driver is provided with a non-spring actuator for drawing a penetrating member in a direction back towards the penetrating member driver.

In another embodiment of the present invention, a method of penetrating a target tissue provides a penetrating member driver. A penetrating member release device is installed for removing a plurality of penetrating members from a sterile environment. The plurality of penetrating members are coupled to a penetrating member sensor configured to provide a indication of a depth of penetration of a penetrating member through the skin target. The penetrating members are transported along a path to be operatively coupled to the penetrating member driver.

In another embodiment of the present invention, a tissue penetrating system includes a plurality of penetrating members. A flexible tape couples the plurality of penetrating members into a flexible array. A penetrating member driver is coupled to the plurality of penetrating members and configured to drive and withdraw a penetrating member into and out of a target tissue. A transport device sequentially couples each penetrating member to the penetrating member driver.

In another embodiment of the present invention, a tissue penetrating system includes a plurality of penetrating members. A flexible tape couples the plurality of penetrating members into a flexible linear array. A penetrating member loading device sequentially couples each penetrating member to a penetrating member driver for driving a penetrating member into a target tissue. The transport device removes an amount of the flexible tape sufficient so that a tip of a penetrating member does not pierce the flexible tape during actuation by the penetrating member driver.

In another embodiment of the present invention, a tissue penetrating system includes a plurality of penetrating members interconnected as a flexible linear array. A plurality of sterility caps are provided for each penetrating member. A penetrating member driver is provided. A penetrating member loading device is configured to sequentially couple each of penetrating

member to the penetrating member driver for driving a penetrating member into a target tissue. The penetrating member loading device removes the sterility cap prior to lancing so that a tip of a penetrating member does not pierce the cape during actuation by the penetrating member driver.

In another embodiment of the present invention, a tissue penetrating system includes a plurality of penetrating members interconnected to define a flexible linear array. A storage device is provided for penetrating members prior to launching. The storage device includes a spool around which the flexible linear array is concentrically wound. A penetrating member driver is provided. A penetrating member loading device sequentially couples each penetrating member to the penetrating member driver for driving a penetrating member into a target tissue.

These and other objects of the present invention are achieved in a skin penetrating system that includes a housing member and a penetrating member positioned in the housing member. An analyte detecting member is coupled to a sample chamber. The analyte detecting member is configured to determine a concentration of an analyte in a body fluid using a sample of less than 1 μL of a body fluid disposed in the sample chamber. A tip of the penetrating member is configured to extend through an opening of the sample chamber.

In another embodiment of the present invention, a skin penetrating system includes a housing member and a plurality of penetrating members positioned in the housing member. A plurality of analyte detecting members are each associated with a penetrating member and a sample chamber. The analyte detecting member is configured to determine a concentration of an analyte in a body fluid using a sample of less than 1 μL of a body fluid disposed in the sample chamber. A tip of the penetrating member is configured to extend through an opening of a sample chamber.

In another embodiment of the present invention, a tissue penetrating system includes a penetrating member driver. A cartridge. with distal and proximal ports, is coupled to the penetrating member driver. An analyte detecting member is coupled to a sample chamber. The analyte detecting member is configured to determine a concentration of an analyte in a body fluid using a sample of less than 1 μL of a body fluid disposed in the sample chamber. A penetrating member has a sharpened distal tip and shaft portion that is slidably disposed within the cartridge. A tip of the penetrating member is configured to extend through the opening of the sample chamber.

In another embodiment of the present invention, a tissue penetrating system includes a penetrating member driver. A cartridge, with distal and proximal ports, is coupled to the

penetrating member driver. An analyte detecting member is coupled to a sample chamber. The analyte detecting member is configured to determine a concentration of an analyte in a body fluid using a sample of less than 1 μL of a body fluid disposed in the sample chamber. A penetrating member has a sharpened distal tip and a shaft portion that is slidably disposed within the cartridge. A tip of the penetrating member is configured to extend through the opening of the analyte detecting member. A first seal is formed at the distal port and a second seal formed at the proximal port. The first and second seals maintain the distal tip of the penetrating member, and the sample chamber, in a sterile environment prior to launch of the penetrating member.

In another embodiment of the present invention, a tissue penetrating system includes a cartridge with a distal port and a proximal port. Each cartridge includes an analyte detecting member coupled to a sample chamber,. The analyte detecting member is configured to determine a concentration of an analyte in a body fluid using a sample of less than 1 μL of a body fluid disposed in the sample chamber. A penetrating member has a sharpened distal tip and a shaft portion that is slidably disposed within the cartridge. A first seal covers the distal port. A second seal covers the proximal port.

In another embodiment of the present invention, a tissue penetrating system includes a plurality of penetrating members each having a sharpened distal tip. A penetrating member driver is coupled to the plurality of penetrating members. A plurality of cartridges each house a penetrating member and are configured so that the penetrating member driver engages each of the penetrating members sequentially. Each cartridge includes an analyte detecting member coupled to a sample chamber. The analyte detecting member is configured to determine a concentration of an analyte in a body fluid using a sample of less than 1 μL of a body fluid disposed in the sample chamber.

In another embodiment of the present invention, a tissue penetrating system includes a plurality of cartridges. Each cartridge includes an analyte detecting member coupled to a sample chamber. The analyte detecting member is configured to determine a concentration of an analyte in a body fluid using a sample of less than 1 μL of a body fluid disposed in the sample chamber. Each of the cartridges has a plurality of seals positioned so that the sample chamber remains in a sterile environment before launch of a penetrating member. The plurality of cartridges are coupled together in an array.

In another embodiment of the present invention, a method of penetrating a target tissue provides a tissue penetrating system with a penetrating member and an analyte detecting member coupled to a sample chamber. A penetrating member is advanced through the target tissue. The

penetrating member is withdrawn from the target tissue. No more than 1 μL of a body fluid is received in the sample chamber.

These and other objects of the present invention are achieved in a skin penetrating system including a penetrating member positioned in a housing member. A tissue stabilizing device is coupled to the housing member.

In another embodiment of the present invention, a skin penetrating system includes a housing member and a penetrating member positioned in the housing member. A tissue pressure applicator is coupled to the housing member.

In another embodiment of the present invention, a skin penetrating system includes a housing member. A penetrating member is positioned in the housing member. An analyte detecting member is coupled to a sample chamber. The analyte detecting member is configured to determine a concentration of an analyte in a body fluid using a sample of less than 1 μL of a body fluid disposed in the sample chamber.

In another embodiment of the present invention, a tissue penetrating system includes a housing and a penetrating member positioned in the housing. A seal is coupled to the penetrating member to maintain the penetrating member in a sterile environment.

A further understanding of the nature and advantages of the invention will become apparent by reference to the remaining portions of the specification and drawings.

## BRIEF DESCRIPTION OF THE DRAWINGS

Figure 1 illustrates an embodiment of a controllable force driver in the form of a cylindrical electric penetrating member driver using a coiled solenoid -type configuration.

Figure 2A illustrates a displacement over time profile of a penetrating member driven by a harmonic spring/mass system.

Figure 2B illustrates the velocity over time profile of a penetrating member driver by a harmonic spring/mass system.

Figure 2C illustrates a displacement over time profile of an embodiment of a controllable force driver.

Figure 2D illustrates a velocity over time profile of an embodiment of a controllable force driver.

Figure 3 is a diagrammatic view illustrating a controlled feed-back loop.

Figure 4 is a perspective view of a tissue penetration device having features of the invention.

Figure 5 is an elevation view in partial longitudinal section of the tissue penetration device of Figure 4.

Figures 6A-6C show a flowchart illustrating a penetrating member control method.

Figure 7 is a diagrammatic view of a patient's finger and a penetrating member tip moving toward the skin of the finger.

Figure 8 is a diagrammatic view of a patient's finger and the penetrating member tip making contact with the skin of a patient's finger.

Figure 9 is a diagrammatic view of the penetrating member tip depressing the skin of a patient's finger.

Figure 10 is a diagrammatic view of the penetrating member tip further depressing the skin of a patient's finger.

Figure 11 is a diagrammatic view of the penetrating member tip penetrating the skin of a patient's finger.

Figure 12 is a diagrammatic view of the penetrating member tip penetrating the skin of a patient's finger to a desired depth.

Figure 13 is a diagrammatic view of the penetrating member tip withdrawing from the skin of a patient's finger.

Figures 14-18 illustrate a method of tissue penetration that may measure elastic recoil of the skin.

Figure 19 is a perspective view in partial section of a tissue penetration sampling device with a cartridge of sampling modules.

Figure 20 is a perspective view of a sampling module cartridge with the sampling modules arranged in a ring configuration.

Figure 21 illustrate an embodiment of a cartridge for use in sampling having a sampling cartridge body and a penetrating member cartridge body.

Figure 22A shows a device for use on a tissue site having a plurality of penetrating members.

Figure 22B shows rear view of a device for use on a tissue site having a plurality of penetrating members.

Figure 22C shows a schematic of a device for use on a tissue site with a feedback loop and optionally a damper.

Figure 23A shows an embodiment of a device with a user interface.

Figure 23B shows an outer view of a device with a user interface.

Figure 24 is a cut away view of a system for sampling body fluid.

Figure 25 is an exploded view of a cartridge for use with a system for sampling body fluid.

Figure 26 is an exploded view of a cartridge having multiple penetrating members for use with a system for sampling body fluid.

Figures 27-28 show cartridges for use with a system for sampling body fluid.

Figure 29 shows a cutaway view of another embodiment of a system for sampling body fluid.

Figure 30 shows the density associated with a cartridge according to the present invention.

Figure 31 shows a cutaway view of another embodiment of a system for sampling body fluid.

Figure 32 is a cut away view of a cartridge according to the present invention.

Figures 33-34 show views of a body sampling system using multiple cartridges.

Figure 35 shows an embodiment of the present invention with a tissue stabilizing member.

Figure 36 shows a cartridge according to the present invention with a tissue stabilizing member.

Figure 37 shows a system according to the present invention with a moveable cartridge.

## DESCRIPTION OF THE SPECIFIC EMBODIMENTS

The present invention provides a solution for body fluid sampling. Specifically, some embodiments of the present invention provides a penetrating member device for consistently creating a wound with spontaneous body fluid flow from a patient. The invention may be a multiple penetrating member device with an optional high density design. It may use penetrating members of smaller size than known penetrating members. The device may be used for multiple lancing events without having to remove a disposable from the device or for the user to handle sharps. The invention may provide improved sensing capabilities. At least some of these and other objectives described herein will be met by embodiments of the present invention.

It is to be understood that both the foregoing general description and the following detailed description are exemplary and explanatory only and are not restrictive of the invention, as claimed. It should be noted that, as used in the specification and the appended claims, the singular forms “a”, “an” and “the” include plural referents unless the context clearly dictates

otherwise. Thus, for example, reference to "a material" may include mixtures of materials, reference to "a chamber" may include multiple chambers, and the like. References cited herein are hereby incorporated by reference in their entirety, except to the extent that they conflict with teachings explicitly set forth in this specification.

In this specification and in the claims which follow, reference will be made to a number of terms which shall be defined to have the following meanings:

"Optional" or "optionally" means that the subsequently described circumstance may or may not occur, so that the description includes instances where the circumstance occurs and instances where it does not. For example, if a device optionally contains a feature for analyzing a blood sample, this means that the analysis feature may or may not be present, and, thus, the description includes structures wherein a device possesses the analysis feature and structures wherein the analysis feature is not present.

"Analyte detecting member" refers to any use, singly or in combination, of chemical test reagents and methods, electrical test circuits and methods, physical test components and methods, optical test components and methods, and biological test reagents and methods to yield information about a blood sample. Such methods are well known in the art and may be based on teachings of, e.g. Tietz Textbook of Clinical Chemistry, 3d Ed., Sec. V, pp. 776-78 (Burtis & Ashwood, Eds., W.B. Saunders Company, Philadelphia, 1999); U.S. Pat. No. 5,997,817 to Chrismore et al. (Dec. 7, 1999); U.S. Pat. No. 5,059,394 to Phillips et al. (Oct. 22, 1991); U.S. Pat. No. 5,001,054 to Wagner et al. (Mar. 19, 1991); and U.S. Pat. No. 4,392,933 to Nakamura et al. (July 12, 1983), the teachings of which are hereby incorporated by reference, as well as others. Analyte detecting member may include tests in the sample test chamber that test electrochemical properties of the blood, or they may include optical means for sensing optical properties of the blood (e.g. oxygen saturation level), or they may include biochemical reagents (e.g. antibodies) to sense properties (e.g. presence of antigens) of the blood. The analyte detecting member may comprise biosensing or reagent material that will react with an analyte in blood (e.g. glucose) or other body fluid so that an appropriate signal correlating with the presence of the analyte is generated and can be read by the reader apparatus. By way of example and not limitation, analyte detecting member may "associated with", "mounted within", or "coupled to" a chamber or other structure when the analyte detecting member participates in the function of providing an appropriate signal about the blood sample to the reader device. Analyte detecting member may also include nanowire analyte detecting members as described herein.

Analyte detecting member may use potentiometric, coulometric, or other method useful for detection of analyte levels.

The present invention may be used with a variety of different penetrating member drivers. It is contemplated that these penetrating member drivers may be spring based, solenoid based, magnetic driver based, nanomuscle based, or based on any other mechanism useful in moving a penetrating member along a path into tissue. It should be noted that the present invention is not limited by the type of driver used with the penetrating member feed mechanism. One suitable penetrating member driver for use with the present invention is shown in Figure 1. This is an embodiment of a solenoid type electromagnetic driver that is capable of driving an iron core or slug mounted to the penetrating member assembly using a direct current (DC) power supply. The electromagnetic driver includes a driver coil pack that is divided into three separate coils along the path of the penetrating member, two end coils and a middle coil. Direct current is alternated to the coils to advance and retract the penetrating member. Although the driver coil pack is shown with three coils, any suitable number of coils may be used, for example, 4, 5, 6, 7 or more coils may be used.

Referring to the embodiment of Figure 1, the stationary iron housing 10 may contain the driver coil pack with a first coil 12 flanked by iron spacers 14 which concentrate the magnetic flux at the inner diameter creating magnetic poles. The inner insulating housing 16 isolates the penetrating member 18 and iron core 20 from the coils and provides a smooth, low friction guide surface. The penetrating member guide 22 further centers the penetrating member 18 and iron core 20. The penetrating member 18 is protracted and retracted by alternating the current between the first coil 12, the middle coil, and the third coil to attract the iron core 20. Reversing the coil sequence and attracting the core and penetrating member back into the housing retracts the penetrating member. The penetrating member guide 22 also serves as a stop for the iron core 20 mounted to the penetrating member 18.

As discussed previously, tissue penetration devices which employ spring or cam driving methods have a symmetrical or nearly symmetrical actuation displacement and velocity profiles on the advancement and retraction of the penetrating member as shown in Figures 2 and 3. In most of the available lancet devices, once the launch is initiated, the stored energy determines the velocity profile until the energy is dissipated. Controlling impact, retraction velocity, and dwell time of the penetrating member within the tissue can be useful in order to achieve a high success rate while accommodating variations in skin properties and minimize pain. Advantages can be achieved by taking into account of the fact that tissue dwell time is related to the amount of skin

deformation as the penetrating member tries to puncture the surface of the skin and variance in skin deformation from patient to patient based on skin hydration.

In this embodiment, the ability to control velocity and depth of penetration may be achieved by use of a controllable force driver where feedback is an integral part of driver control. Such drivers can control either metal or polymeric penetrating members or any other type of tissue penetration element. The dynamic control of such a driver is illustrated in Figure. 2C which illustrates an embodiment of a controlled displacement profile and Figure 2D which illustrates an embodiment of a the controlled velocity profile. These are compared to Figures 2A and 2B, which illustrate embodiments of displacement and velocity profiles, respectively, of a harmonic spring/mass powered driver. Reduced pain can be achieved by using impact velocities of greater than about 2 m/s entry of a tissue penetrating element, such as a lancet, into tissue. Other suitable embodiments of the penetrating member driver are described in commonly assigned, copending U.S. Patent Application Ser. No. 10/127,395, (Attorney Docket No. 38187-2551) filed April 19, 2002 and previously incorporated herein.

Figure 3 illustrates, as a nonlimiting example, the operation of a feedback loop using a processor 60. The processor 60 stores profiles 62 in non-volatile memory. A user inputs information 64 about the desired circumstances or parameters for a lancing event. The processor 60 selects a driver profile 62 from a set of alternative driver profiles that have been preprogrammed in the processor 60 based on typical or desired tissue penetration device performance determined through testing at the factory or as programmed in by the operator. The processor 60 may customize by either scaling or modifying the profile based on additional user input information 64. Once the processor has chosen and customized the profile, the processor 60 is ready to modulate the power from the power supply 66 to the penetrating member driver 68 through an amplifier 70. The processor 60 may measure the location of the penetrating member 72 using a position sensing mechanism 74 through an analog to digital converter 76 linear encoder or other such transducer. Examples of position sensing mechanisms have been described in the embodiments above and may be found in the specification for commonly assigned, copending U.S. Patent Application Ser. No. 10/127,395, (Attorney Docket No. 38187-2551) filed April 19, 2002 and previously incorporated herein. The processor 60 calculates the movement of the penetrating member by comparing the actual profile of the penetrating member to the predetermined profile. The processor 60 modulates the power to the penetrating member driver 68 through a signal generator 78, which may control the amplifier 70 so that the actual

velocity profile of the penetrating member does not exceed the predetermined profile by more than a preset error limit. The error limit is the accuracy in the control of the penetrating member.

After the lancing event, the processor 60 can allow the user to rank the results of the lancing event. The processor 60 stores these results and constructs a database 80 for the individual user. Using the database 79, the processor 60 calculates the profile traits such as degree of painlessness, success rate, and blood volume for various profiles 62 depending on user input information 64 to optimize the profile to the individual user for subsequent lancing cycles. These profile traits depend on the characteristic phases of penetrating member advancement and retraction. The processor 60 uses these calculations to optimize profiles 62 for each user. In addition to user input information 64, an internal clock allows storage in the database 79 of information such as the time of day to generate a time stamp for the lancing event and the time between lancing events to anticipate the user's diurnal needs. The database stores information and statistics for each user and each profile that particular user uses.

In addition to varying the profiles, the processor 60 can be used to calculate the appropriate penetrating member diameter and geometry suitable to realize the blood volume required by the user. For example, if the user requires about 1-5 microliter volume of blood, the processor 60 may select a 200 micron diameter penetrating member to achieve these results. For each class of lancet, both diameter and lancet tip geometry, is stored in the processor 60 to correspond with upper and lower limits of attainable blood volume based on the predetermined displacement and velocity profiles.

The lancing device is capable of prompting the user for information at the beginning and the end of the lancing event to more adequately suit the user. The goal is to either change to a different profile or modify an existing profile. Once the profile is set, the force driving the penetrating member is varied during advancement and retraction to follow the profile. The method of lancing using the lancing device comprises selecting a profile, lancing according to the selected profile, determining lancing profile traits for each characteristic phase of the lancing cycle, and optimizing profile traits for subsequent lancing events.

Figure 4 illustrates an embodiment of a tissue penetration device, more specifically, a lancing device 80 that includes a controllable driver 179 coupled to a tissue penetration element. The lancing device 80 has a proximal end 81 and a distal end 82. At the distal end 82 is the tissue penetration element in the form of a penetrating member 83, which is coupled to an elongate coupler shaft 84 by a drive coupler 85. The elongate coupler shaft 84 has a proximal end 86 and a distal end 87. A driver coil pack 88 is disposed about the elongate coupler shaft 84

proximal of the penetrating member 83. A position sensor 91 is disposed about a proximal portion 92 of the elongate coupler shaft 84 and an electrical conductor 94 electrically couples a processor 93 to the position sensor 91. The elongate coupler shaft 84 driven by the driver coil pack 88 controlled by the position sensor 91 and processor 93 form the controllable driver, specifically, a controllable electromagnetic driver.

Referring to Figure 5, the lancing device 80 can be seen in more detail, in partial longitudinal section. The penetrating member 83 has a proximal end 95 and a distal end 96 with a sharpened point at the distal end 96 of the penetrating member 83 and a drive head 98 disposed at the proximal end 95 of the penetrating member 83. A penetrating member shaft 201 is disposed between the drive head 98 and the sharpened point 97. The penetrating member shaft 201 may be comprised of stainless steel, or any other suitable material or alloy and have a transverse dimension of about 0.1 to about 0.4 mm. The penetrating member shaft may have a length of about 3 mm to about 50 mm, specifically, about 15 mm to about 20 mm. The drive head 98 of the penetrating member 83 is an enlarged portion having a transverse dimension greater than a transverse dimension of the penetrating member shaft 201 distal of the drive head 98. This configuration allows the drive head 98 to be mechanically captured by the drive coupler 85. The drive head 98 may have a transverse dimension of about 0.5 to about 2 mm.

A magnetic member 102 is secured to the elongate coupler shaft 84 proximal of the drive coupler 85 on a distal portion 203 of the elongate coupler shaft 84. The magnetic member 102 is a substantially cylindrical piece of magnetic material having an axial lumen 204 extending the length of the magnetic member 102. The magnetic member 102 has an outer transverse dimension that allows the magnetic member 102 to slide easily within an axial lumen 105 of a low friction, possibly lubricious, polymer guide tube 105' disposed within the driver coil pack 88. The magnetic member 102 may have an outer transverse dimension of about 1.0 to about 5.0 mm, specifically, about 2.3 to about 2.5 mm. The magnetic member 102 may have a length of about 3.0 to about 5.0 mm, specifically, about 4.7 to about 4.9 mm. The magnetic member 102 can be made from a variety of magnetic materials including ferrous metals such as ferrous steel, iron, ferrite, or the like. The magnetic member 102 may be secured to the distal portion 203 of the elongate coupler shaft 84 by a variety of methods including adhesive or epoxy bonding, welding, crimping or any other suitable method.

Proximal of the magnetic member 102, an optical encoder flag 206 is secured to the elongate coupler shaft 84. It should be understood of course, that a variety of other position sensors as known in the art may be used in place of the optical encoder flag or strip. In this

nonlimiting embodiment, the optical encoder flag 206 is configured to move within a slot 107 in the position sensor 91. The slot 107 of the position sensor 91 is formed between a first body portion 108 and a second body portion 109 of the position sensor 91. The slot 107 may have separation width of about 1.5 to about 2.0 mm. The optical encoder flag 206 can have a length of about 14 to about 18 mm, a width of about 3 to about 5 mm and a thickness of about 0.04 to about 0.06 mm.

The optical encoder flag 206 interacts with various optical beams generated by LEDs disposed on or in the position sensor body portions 108 and 109 in a predetermined manner. The interaction of the optical beams generated by the LEDs of the position sensor 91 generates a signal that indicates the longitudinal position of the optical flag 206 relative to the position sensor 91 with a substantially high degree of resolution. The resolution of the position sensor 91 may be about 200 to about 400 cycles per inch, specifically, about 350 to about 370 cycles per inch. The position sensor 91 may have a speed response time (position/time resolution) of 0 to about 120,000 Hz, where one dark and light stripe of the flag constitutes one Hertz, or cycle per second. The position of the optical encoder flag 206 relative to the magnetic member 102, driver coil pack 88 and position sensor 91 is such that the optical encoder 91 can provide precise positional information about the penetrating member 83 over the entire length of the penetrating member's power stroke.

As a nonlimting example, an optical encoder that is suitable for the position sensor 91 is a linear optical incremental encoder, model HEDS 9200, manufactured by Agilent Technologies. The model HEDS 9200 may have a length of about 20 to about 30 mm, a width of about 8 to about 12 mm, and a height of about 9 to about 11 mm. Although the position sensor 91 illustrated is a linear optical incremental encoder, other suitable position sensor embodiments could be used, provided they posses the requisite positional resolution and time response. The HEDS 9200 is a two channel device where the channels are 90 degrees out of phase with each other. This results in a resolution of four times the basic cycle of the flag. These quadrature outputs make it possible for the processor to determine the direction of penetrating member travel. Other suitable position sensors include capacitive encoders, analog reflective sensors, such as the reflective position sensor discussed above, and the like.

A coupler shaft guide 111 is disposed towards the proximal end 81 of the lancing device 80. The guide 111 has a guide lumen 112 disposed in the guide 111 to slidingly accept the proximal portion 92 of the elongate coupler shaft 84. The guide 111 keeps the elongate coupler shaft 84 centered horizontally and vertically in the slot 102 of the optical encoder 91.

The driver coil pack 88, position sensor 91 and coupler shaft guide 111 are all secured to a base 113 in this embodiment. The base 113 is longitudinally coextensive with the driver coil pack 88, position sensor 91 and coupler shaft guide 111. The base 113 can take the form of a rectangular piece of metal or polymer, or may be a more elaborate housing with recesses, which are configured to accept the various components of the lancing device 80.

As discussed above, the magnetic member 102 is configured to slide within an axial lumen 105 of the driver coil pack 88. The driver coil pack 88 includes a most distal first coil 114, a second coil 115, which is axially disposed between the first coil 114 and a third coil 116, and a proximal-most fourth coil 117. Each of the first coil 114, second coil 115, third coil 116 and fourth coil 117 has an axial lumen. The axial lumens of the first through fourth coils are configured to be coaxial with the axial lumens of the other coils and together form the axial lumen 105 of the driver coil pack 88 as a whole. Axially adjacent each of the coils 114-117 is a magnetic disk or washer 118 that augments completion of the magnetic circuit of the coils 114-117 during a lancing cycle of the device 80. The magnetic washers 118 of the embodiment of Figure 5 are made of ferrous steel but could be made of any other suitable magnetic material, such as iron or ferrite. The outer shell 89 of the driver coil pack 88 is also made of iron or steel to complete the magnetic path around the coils and between the washers 118. The magnetic washers 118 have an outer diameter commensurate with an outer diameter of the driver coil pack 88 of about 4.0 to about 8.0 mm. The magnetic washers 118 have an axial thickness of about 0.05, to about 0.4 mm, specifically, about 0.15 to about 0.25 mm.

Wrapping or winding an elongate electrical conductor 121 about an axial lumen until a sufficient number of windings have been achieved forms the coils 114-117. The elongate electrical conductor 121 is generally an insulated solid copper wire with a small outer transverse dimension of about 0.06 mm to about 0.88 mm, specifically, about 0.3 mm to about 0.5 mm. In one embodiment, 32 gauge copper wire is used for the coils 114-117. The number of windings for each of the coils 114-117 of the driver pack 88 may vary with the size of the coil, but for some embodiments each coil 114-117 may have about 30 to about 80 turns, specifically, about 50 to about 60 turns. Each coil 114-117 can have an axial length of about 1.0 to about 3.0 mm, specifically, about 1.8 to about 2.0 mm. Each coil 114-117 can have an outer transverse dimension or diameter of about 4.0, to about 2.0 mm, specifically, about 9.0 to about 12.0 mm. The axial lumen 105 can have a transverse dimension of about 1.0 to about 3.0 mm.

It may be advantageous in some driver coil 88 embodiments to replace one or more of the coils with permanent magnets, which produce a magnetic field similar to that of the coils when

the coils are activated. In particular, it may be desirable in some embodiments to replace the second coil 115, the third coil 116 or both with permanent magnets. In addition, it may be advantageous to position a permanent magnet at or near the proximal end of the coil driver pack in order to provide fixed magnet zeroing function for the magnetic member (Adams magnetic Products 23A0002 flexible magnet material (800) 747-7543).

Figures 4 and 5 show a permanent bar magnet 119 disposed on the proximal end of the driver coil pack 88. As shown in Figure 5, the bar magnet 119 is arranged so as to have one end disposed adjacent the travel path of the magnetic member 102 and has a polarity configured so as to attract the magnetic member 102 in a centered position with respect to the bar magnet 119. Note that the polymer guide tube 105' can be configured to extend proximally to insulate the inward radial surface of the bar magnet 119 from an outer surface of the magnetic member 102. This arrangement allows the magnetic member 119 and thus the elongate coupler shaft 84 to be attracted to and held in a zero point or rest position without the consumption of electrical energy from the power supply 125.

Having a fixed zero or start point for the elongate coupler shaft 84 and penetrating member 83 may be useful to properly controlling the depth of penetration of the penetrating member 83 as well as other lancing parameters. This can be because some methods of depth penetration control for a controllable driver measure the acceleration and displacement of the elongate coupler shaft 84 and penetrating member 83 from a known start position. If the distance of the penetrating member tip 96 from the target tissue is known, acceleration and displacement of the penetrating member is known and the start position of the penetrating member is know, the time and position of tissue contact and depth of penetration can be determined by the processor 93.

Any number of configurations for a magnetic bar 119 can be used for the purposes discussed above. In particular, a second permanent bar magnet (not shown) could be added to the proximal end of the driver coil pack 88 with the magnetic fields of the two bar magnets configured to complement each other. In addition, a disc magnet 119' could be used as illustrated in Figure 22. Disc magnet 119' is shown disposed at the proximal end of the driver coiled pack 88 with a polymer non-magnetic disc 119" disposed between the proximal-most coil 117 and disc magnet 119' and positions disc magnet 119' away from the proximal end of the proximal-most coil 117. The polymer non-magnetic disc spacer 119" is used so that the magnetic member 102 can be centered in a zero or start position slightly proximal of the proximal-most coil 117 of the driver coil pack 88. This allows the magnetic member to be

attracted by the proximal-most coil 117 at the initiation of the lancing cycle instead of being passive in the forward drive portion of the lancing cycle.

An inner lumen of the polymer non-magnetic disc 119" can be configured to allow the magnetic member 102 to pass axially there through while an inner lumen of the disc magnet 119' can be configured to allow the elongate coupler shaft 84 to pass through but not large enough for the magnetic member 102 to pass through. This results in the magnetic member 102 being attracted to the disc magnet 119' and coming to rest with the proximal surface of the magnetic member 102 against a distal surface of the disc magnet 119'. This arrangement provides for a positive and repeatable stop for the magnetic member, and hence the penetrating member. A similar configuration could also be used for the bar magnet 119 discussed above.

Typically, when the electrical current in the coils 114-117 of the driver coil pack 88 is off, a magnetic member 102 made of soft iron is attracted to the bar magnet 119 or disc magnet 119'. The magnetic field of the driver coil pack 88 and the bar magnet 119 or disc magnet 119', or any other suitable magnet, can be configured such that when the electrical current in the coils 114-117 is turned on, the leakage magnetic field from the coils 114-117 has the same polarity as the bar magnet 119 or disc magnet 119'. This results in a magnetic force that repels the magnetic member 102 from the bar magnet 119 or disc magnet 119' and attracts the magnetic member 102 to the activated coils 114-117. For this configuration, the bar magnet 119 or disc magnet thus act to facilitate acceleration of the magnetic member 102 as opposed to working against the acceleration.

Electrical conductors 122 couple the driver coil pack 88 with the processor 93 which can be configured or programmed to control the current flow in the coils 114-117 of the driver coil pack 88 based on position feedback from the position sensor 91, which is coupled to the processor 93 by electrical conductors 94. A power source 125 is electrically coupled to the processor 93 and provides electrical power to operate the processor 93 and power the coil driver pack 88. The power source 125 may be one or more batteries that provide direct current power to the 93 processor.

Referring to Figures 29A-29C, a flow diagram is shown that describes the operations performed by the processor 93 in controlling the penetrating member 83 of the lancing device 80 discussed above during an operating cycle. Figures 30-36 illustrate the interaction of the penetrating member 83 and skin 133 of the patient's finger 134 during an operation cycle of the penetrating member device 83. The processor 93 operates under control of programming steps that are stored in an associated memory. When the programming steps are executed, the processor 93 performs operations as described herein. Thus, the programming steps implement the functionality of the operations described with respect to the flow diagram of Figure 29. The processor 93 can receive the programming steps from a program product stored in recordable media, including a direct access program product storage device such as a hard drive or flash ROM, a removable program product storage device such as a floppy disk, or in any other manner known to those of skill in the art. The processor 93 can also download the programming steps through a network connection or serial connection.

In the first operation, represented by the flow diagram box numbered 245 in Figure 6A, the processor 93 initializes values that it stores in memory relating to control of the penetrating member, such as variables that it uses to keep track of the controllable driver 179 during movement. For example, the processor may set a clock value to zero and a penetrating member position value to zero or to some other initial value. The processor 93 may also cause power to be removed from the coil pack 88 for a period of time, such as for about 10 ms, to allow any residual flux to dissipate from the coils.

In the initialization operation, the processor 93 also causes the penetrating member to assume an initial stationary position. When in the initial stationary position, the penetrating member 83 is typically fully retracted such that the magnetic member 102 is positioned substantially adjacent the fourth coil 117 of the driver coil pack 88, shown in Figure 5 above. The processor 93 can move the penetrating member 83 to the initial stationary position by pulsing an electrical current to the fourth coil 117 to thereby attract the magnetic member 102 on the penetrating member 83 to the fourth coil 117. Alternatively, the magnetic member can be positioned in the initial stationary position by virtue of a permanent magnet, such as bar magnet 119, disc magnet 119' or any other suitable magnet as discussed above with regard to the tissue penetration device illustrated in Figures 20 and 21.

In the next operation, represented by the flow diagram box numbered 247, the processor 93 energizes one or more of the coils in the coil pack 88. This should cause the penetrating member 83 to begin to move (i.e., achieve a non-zero speed) toward the skin target 133. The

processor 93 then determines whether or not the penetrating member is indeed moving, as represented by the decision box numbered 149. The processor 93 can determine whether the penetrating member 83 is moving by monitoring the position of the penetrating member 83 to determine whether the position changes over time. The processor 93 can monitor the position of the penetrating member 83 by keeping track of the position of the optical encoder flag 106 secured to the elongate coupler shaft 84 wherein the encoder 91 produces a signal coupled to the processor 93 that indicates the spatial position of the penetrating member 83.

If the processor 93 determines (via timeout without motion events) that the penetrating member 83 is not moving (a "No" result from the decision box 149), then the process proceeds to the operation represented by the flow diagram box numbered 153, where the processor deems that an error condition is present. This means that some error in the system is causing the penetrating member 83 not to move. The error may be mechanical, electrical, or software related. For example, the penetrating member 83 may be stuck in the stationary position because something is impeding its movement.

If the processor 93 determines that the penetrating member 83 is indeed moving (a "Yes" result from the decision box numbered 249), then the process proceeds to the operation represented by the flow diagram box numbered 257. In this operation, the processor 93 causes the penetrating member 83 to continue to accelerate and launch toward the skin target 133, as indicated by the arrow 135 in Figure 7. The processor 93 can achieve acceleration of the penetrating member 83 by sending an electrical current to an appropriate coil 114-117 such that the coil 114-117 exerts an attractive magnetic launching force on the magnetic member 102 and causes the magnetic member 102 and the penetrating member 83 coupled thereto to move in a desired direction. For example, the processor 93 can cause an electrical current to be sent to the third coil 116 so that the third coil 116 attracts the magnetic member 102 and causes the magnetic member 102 to move from a position adjacent the fourth coil 117 toward the third coil 116. The processor preferably determines which coil 114-117 should be used to attract the magnetic member 102 based on the position of the magnetic member 102 relative to the coils 114-117. In this manner, the processor 93 provides a controlled force to the penetrating member that controls the movement of the penetrating member.

During this operation, the processor 93 periodically or continually monitors the position and/or velocity of the penetrating member 83. In keeping track of the velocity and position of the penetrating member 83 as the penetrating member 83 moves towards the patient's skin 133 or other tissue, the processor 93 also monitors and adjusts the electrical current to the coils 114-117.

In some embodiments, the processor 93 applies current to an appropriate coil 114-117 such that the penetrating member 83 continues to move according to a desired direction and acceleration. In the instant case, the processor 93 applies current to the appropriate coil 114-117 that will cause the penetrating member 83 to continue to move in the direction of the patient's skin 133 or other tissue to be penetrated.

The processor 93 may successively transition the current between coils 114-117 so that as the magnetic member 102 moves past a particular coil 114-117, the processor 93 then shuts off current to that coil 114-117 and then applies current to another coil 114-117 that will attract the magnetic member 102 and cause the magnetic member 102 to continue to move in the desired direction. In transitioning current between the coils 114-117, the processor 93 can take into account various factors, including the speed of the penetrating member 83, the position of the penetrating member 83 relative to the coils 114-117, the number of coils 114-117, and the level of current to be applied to the coils 114-117 to achieve a desired speed or acceleration.

In the next operation, the processor 93 determines whether the cutting or distal end tip 96 of the penetrating member 83 has contacted the patient's skin 133, as shown in Figure 8 and as represented by the decision box numbered 165 in Figure 6B. The processor 93 may determine whether the penetrating member 83 has made contact with the target tissue 133 by a variety of methods, including some that rely on parameters which are measured prior to initiation of a lancing cycle and other methods that are adaptable to use during a lancing cycle without any predetermined parameters.

In one embodiment, the processor 93 determines that the skin has been contacted when the end tip 96 of the penetrating member 83 has moved a predetermined distance with respect to its initial position. If the distance from the tip 261 of the penetrating member 83 to the target tissue 133 is known prior to initiation of penetrating member 83 movement, the initial position of the penetrating member 83 is fixed and known, and the movement and position of the penetrating member 83 can be accurately measured during a lancing cycle, then the position and time of penetrating member contact can be determined.

This method requires an accurate measurement of the distance between the penetrating member tip 96 and the patient's skin 133 when the penetrating member 83 is in the zero time or initial position. This can be accomplished in a number of ways. One way is to control all of the mechanical parameters that influence the distance from the penetrating member tip 96 to the patient's tissue or a surface of the lancing device 80 that will contact the patient's skin 133. This could include the start position of the magnetic member 102, magnetic path tolerance, magnetic

member 102 dimensions, driver coil pack 88 location within the lancing device 80 as a whole, length of the elongate coupling shaft 84, placement of the magnetic member 102 on the elongate coupling shaft 84, length of the penetrating member 83 etc.

If all these parameters, as well as others can be suitably controlled in manufacturing with a tolerance stack-up that is acceptable, then the distance from the penetrating member tip 96 to the target tissue 133 can be determined at the time of manufacture of the lancing device 80. The distance could then be programmed into the memory of the processor 93. If an adjustable feature is added to the lancing device 80, such as an adjustable length elongate coupling shaft 84, this can accommodate variations in all of the parameters noted above, except length of the penetrating member 83. An electronic alternative to this mechanical approach would be to calibrate a stored memory contact point into the memory of the processor 93 during manufacture based on the mechanical parameters described above.

In another embodiment, moving the penetrating member tip 96 to the target tissue 133 very slowly and gently touching the skin 133 prior to actuation can accomplish the distance from the penetrating member tip 96 to the tissue 133. The position sensor can accurately measure the distance from the initialization point to the point of contact, where the resistance to advancement of the penetrating member 83 stops the penetrating member movement. The penetrating member 83 is then retracted to the initialization point having measured the distance to the target tissue 133 without creating any discomfort to the user.

In another embodiment, the processor 93 may use software to determine whether the penetrating member 83 has made contact with the patient's skin 133 by measuring for a sudden reduction in velocity of the penetrating member 83 due to friction or resistance imposed on the penetrating member 83 by the patient's skin 133. The optical encoder 91 measures displacement of the penetrating member 83. The position output data provides input to the interrupt input of the processor 93. The processor 93 also has a timer capable of measuring the time between interrupts. The distance between interrupts is known for the optical encoder 91, so the velocity of the penetrating member 83 can be calculated by dividing the distance between interrupts by the time between the interrupts.

This method requires that velocity losses to the penetrating member 83 and elongate coupler 84 assembly due to friction are known to an acceptable level so that these velocity losses and resulting deceleration can be accounted for when establishing a deceleration threshold above which contact between penetrating member tip 96 and target tissue 133 will be presumed. This same concept can be implemented in many ways. For example, rather than monitoring the

velocity of the penetrating member 83, if the processor 93 is controlling the penetrating member driver in order to maintain a fixed velocity, the power to the driver 88 could be monitored. If an amount of power above a predetermined threshold is required in order to maintain a constant velocity, then contact between the tip of the penetrating member 96 and the skin 133 could be presumed.

In yet another embodiment, the processor 93 determines skin 133 contact by the penetrating member 83 by detection of an acoustic signal produced by the tip 96 of the penetrating member 83 as it strikes the patient's skin 133. Detection of the acoustic signal can be measured by an acoustic detector 136 placed in contact with the patient's skin 133 adjacent a penetrating member penetration site 137, as shown in Figure 8. Suitable acoustic detectors 136 include piezo electric transducers, microphones and the like. The acoustic detector 136 transmits an electrical signal generated by the acoustic signal to the processor 93 via electrical conductors 138. In another embodiment, contact of the penetrating member 83 with the patient's skin 133 can be determined by measurement of electrical continuity in a circuit that includes the penetrating member 83, the patient's finger 134 and an electrical contact pad 240 that is disposed on the patient's skin 133 adjacent the contact site 137 of the penetrating member 83, as shown in Figure 8. In this embodiment, as soon as the penetrating member 83 contacts the patient's skin 133, the circuit 139 is completed and current flows through the circuit 139. Completion of the circuit 139 can then be detected by the processor 93 to confirm skin 133 contact by the penetrating member 83.

If the penetrating member 83 has not contacted the target skin 133, then the process proceeds to a timeout operation, as represented by the decision box numbered 167 in Figure 6B. In the timeout operation, the processor 93 waits a predetermined time period. If the timeout period has not yet elapsed (a "No" outcome from the decision box 167), then the processor continues to monitor whether the penetrating member has contacted the target skin 133. The processor 93 preferably continues to monitor the position and speed of the penetrating member 83, as well as the electrical current to the appropriate coil 114-117 to maintain the desired penetrating member 83 movement.

If the timeout period elapses without the penetrating member 83 contacting the skin (a "Yes" output from the decision box 167), then it is deemed that the penetrating member 83 will not contact the skin and the process proceeds to a withdraw phase, where the penetrating member is withdrawn away from the skin 133, as discussed more fully below. The penetrating member 83 may not have contacted the target skin 133 for a variety of reasons, such as if the patient

removed the skin 133 from the lancing device or if something obstructed the penetrating member 83 prior to it contacting the skin.

The processor 93 may also proceed to the withdraw phase prior to skin contact for other reasons. For example, at some point after initiation of movement of the penetrating member 83, the processor 93 may determine that the forward acceleration of the penetrating member 83 towards the patient's skin 133 should be stopped or that current to all coils 114-117 should be shut down. This can occur, for example, if it is determined that the penetrating member 83 has achieved sufficient forward velocity, but has not yet contacted the skin 133. In one embodiment, the average penetration velocity of the penetrating member 83 from the point of contact with the skin to the point of maximum penetration may be about 2.0 to about 10.0 m/s, specifically, about 3.8 to about 4.2 m/s. In another embodiment, the average penetration velocity of the penetrating member may be from about 2 to about 8 meters per second, specifically, about 2 to about 4 m/s.

The processor 93 can also proceed to the withdraw phase if it is determined that the penetrating member 83 has fully extended to the end of the power stroke of the operation cycle of lancing procedure. In other words, the process may proceed to withdraw phase when an axial center 141 of the magnetic member 102 has moved distal of an axial center 142 of the first coil 114 as show in Figure 5. In this situation, any continued power to any of the coils 114-117 of the driver coil pack 88 serves to decelerate the magnetic member 102 and thus the penetrating member 83. In this regard, the processor 93 considers the length of the penetrating member 83 (which can be stored in memory) the position of the penetrating member 83 relative to the magnetic member 102, as well as the distance that the penetrating member 83 has traveled.

With reference again to the decision box 165 in Figure 6B, if the processor 93 determines that the penetrating member 83 has contacted the skin 133 (a "Yes" outcome from the decision box 165), then the processor 93 can adjust the speed of the penetrating member 83 or the power delivered to the penetrating member 83 for skin penetration to overcome any frictional forces on the penetrating member 83 in order to maintain a desired penetration velocity of the penetrating member. The flow diagram box numbered 167 represents this.

As the velocity of the penetrating member 83 is maintained after contact with the skin 133, the distal tip 96 of the penetrating member 83 will first begin to depress or tent the contacted skin 137 and the skin 133 adjacent the penetrating member 83 to form a tented portion 243 as shown in Figure 9 and further shown in Figure 10. As the penetrating member 83 continues to move in a distal direction or be driven in a distal direction against the patient's skin 133, the penetrating member 83 will eventually begin to penetrate the skin 133, as shown in

Figure 11. Once penetration of the skin 133 begins, the static force at the distal tip 96 of the penetrating member 83 from the skin 133 will become a dynamic cutting force, which is generally less than the static tip force. As a result in the reduction of force on the distal tip 96 of the penetrating member 83 upon initiation of cutting, the tented portion 243 of the skin 133 adjacent the distal tip 96 of the penetrating member 83 which had been depressed as shown in Figures 32 and 24 will spring back as shown in Figure 11.

In the next operation, represented by the decision box numbered 171 in Figure 6B, the processor 93 determines whether the distal end 96 of the penetrating member 83 has reached a brake depth. The brake depth is the skin penetration depth for which the processor 93 determines that deceleration of the penetrating member 83 is to be initiated in order to achieve a desired final penetration depth 144 of the penetrating member 83 as show in Figure 12. The brake depth may be pre-determined and programmed into the processor's memory, or the processor 93 may dynamically determine the brake depth during the actuation. The amount of penetration of the penetrating member 83 in the skin 133 of the patient may be measured during the operation cycle of the penetrating member device 80. In addition, as discussed above, the penetration depth suitable for successfully obtaining a useable sample can depend on the amount of tenting of the skin 133 during the lancing cycle. The amount of tenting of the patient's skin 133 can in turn depend on the tissue characteristics of the patient such as elasticity, hydration etc. A method for determining these characteristics is discussed below with regard to skin 133 tenting measurements during the lancing cycle and illustrated in Figures 37-41.

Penetration measurement can be carried out by a variety of methods that are not dependent on measurement of tenting of the patient's skin. In one embodiment, the penetration depth of the penetrating member 83 in the patient's skin 133 is measured by monitoring the amount of capacitance between the penetrating member 83 and the patient's skin 133. In this embodiment, a circuit includes the penetrating member 83, the patient's finger 134, the processor 93 and electrical conductors connecting these elements. As the penetrating member 83 penetrates the patient's skin 133, the greater the amount of penetration, the greater the surface contact area between the penetrating member 83 and the patient's skin 133. As the contact area increases, so does the capacitance between the skin 133 and the penetrating member 83. The increased capacitance can be easily measured by the processor 93 using methods known in the art and penetration depth can then be correlated to the amount of capacitance. The same method can be used by measuring the electrical resistance between the penetrating member 83 and the patient's skin.

If the brake depth has not yet been reached, then a "No" results from the decision box 171 and the process proceeds to the timeout operation represented by the flow diagram box numbered 173. In the timeout operation, the processor 93 waits a predetermined time period. If the timeout period has not yet elapsed (a "No" outcome from the decision box 173), then the processor continues to monitor whether the brake depth has been reached. If the timeout period elapses without the penetrating member 83 achieving the brake depth (a "Yes" output from the decision box 173), then the processor 93 deems that the penetrating member 83 will not reach the brake depth and the process proceeds to the withdraw phase, which is discussed more fully below. This may occur, for example, if the penetrating member 83 is stuck at a certain depth.

With reference again to the decision box numbered 171 in Figure 6B, if the penetrating member does reach the brake depth (a "Yes" result), then the process proceeds to the operation represented by the flow diagram box numbered 275. In this operation, the processor 93 causes a braking force to be applied to the penetrating member to thereby reduce the speed of the penetrating member 83 to achieve a desired amount of final skin penetration depth 144, as shown in Figure 26. Note that Figures 32 and 33 illustrate the penetrating member making contact with the patient's skin and deforming or depressing the skin prior to any substantial penetration of the skin. The speed of the penetrating member 83 is preferably reduced to a value below a desired threshold and is ultimately reduced to zero. The processor 93 can reduce the speed of the penetrating member 83 by causing a current to be sent to a 114-117 coil that will exert an attractive braking force on the magnetic member 102 in a proximal direction away from the patient's tissue or skin 133, as indicated by the arrow 190 in Figure 13. Such a negative force reduces the forward or distally oriented speed of the penetrating member 83. The processor 93 can determine which coil 114-117 to energize based upon the position of the magnetic member 102 with respect to the coils 114-117 of the driver coil pack 88, as indicated by the position sensor 91.

In the next operation, the process proceeds to the withdraw phase, as represented by the flow diagram box numbered 177. The withdraw phase begins with the operation represented by the flow diagram box numbered 178 in Figure 6C. Here, the processor 93 allows the penetrating member 83 to settle at a position of maximum skin penetration 144, as shown in Figure 12. In this regard, the processor 93 waits until any motion in the penetrating member 83 (due to vibration from impact and spring energy stored in the skin, etc.) has stopped by monitoring changes in position of the penetrating member 83. The processor 93 preferably waits until several milliseconds (ms), such as on the order of about 8 ms, have passed with no changes in

position of the penetrating member 83. This is an indication that movement of the penetrating member 83 has ceased entirely. In some embodiments, the penetrating member may be allowed to settle for about 1 to about 2000 milliseconds, specifically, about 50 to about 200 milliseconds. For other embodiments, the settling time may be about 1 to about 200 milliseconds.

It is at this stage of the lancing cycle that a software method can be used to measure the amount of tenting of the patient's skin 133 and thus determine the skin 133 characteristics such as elasticity, hydration and others. Referring to Figures 37-41, a penetrating member 83 is illustrated in various phases of a lancing cycle with target tissue 133. Figure 14 shows tip 96 of penetrating member 83 making initial contact with the skin 133 at the point of initial impact.

Figure 15 illustrates an enlarged view of the penetrating member 83 making initial contact with the tissue 133 shown in Figure 14. In Figure 16, the penetrating member tip 96 has depressed or tented the skin 133 prior to penetration over a distance of X, as indicated by the arrow labeled X in Figure 16. In Figure 17, the penetrating member 83 has reached the full length of the cutting power stroke and is at maximum displacement. In this position, the penetrating member tip 96 has penetrated the tissue 133 a distance of Y, as indicated by the arrow labeled Y in Figure 16. As can be seen from comparing Figure 15 with Figure 17, the penetrating member tip 96 was displaced a total distance of X plus Y from the time initial contact with the skin 133 was made to the time the penetrating member tip 96 reached its maximum extension as shown in Figure 17. However, the penetrating member tip 96 has only penetrated the skin 133 a distance Y because of the tenting phenomenon.

At the end of the power stroke of the penetrating member 83, as discussed above with regard to box 179 of Figure 6C, the processor 93 allows the penetrating member to settle for about 8 msec. It is during this settling time that the skin 133 rebounds or relaxes back to approximately its original configuration prior to contact by the penetrating member 83 as shown in Figure 18. The penetrating member tip 96 is still buried in the skin to a depth of Y, as shown in Figure 18, however the elastic recoil of the tissue has displaced the penetrating member rearward or retrograde to the point of inelastic tenting that is indicated by the arrows Z in Figure 18. During the rearward displacement of the penetrating member 83 due to the elastic tenting of the tissue 133, the processor reads and stores the position data generated by the position sensor 91 and thus measures the amount of elastic tenting, which is the difference between X and Z.

Referring to Figure 19, a tissue penetration sampling device 80 is shown with the controllable driver 179 of Figure 4 coupled to a sampling module cartridge 205 and disposed within a driver housing 206. A ratchet drive mechanism 207 is secured to the driver housing

206, coupled to the sampling module cartridge 205 and configured to advance a sampling module belt 208 within the sampling module cartridge 205 so as to allow sequential use of each sampling module 209 in the sampling module belt 208. The ratchet drive mechanism 207 has a drive wheel 211 configured to engage the sampling modules 209 of the sampling module belt 208. The drive wheel 211 is coupled to an actuation lever 212 that advances the drive wheel 211 in increments of the width of a single sampling module 209. A T-slot drive coupler 213 is secured to the elongated coupler shaft 84.

A sampling module 209 is loaded and ready for use with the drive head 98 of the penetrating member 83 of the sampling module 209 loaded in the T-slot 214 of the drive coupler 213. A sampling site 215 is disposed at the distal end 216 of the sampling module 209 disposed about a penetrating member exit port 217. The distal end 216 of the sampling module 209 is exposed in a module window 218, which is an opening in a cartridge cover 221 of the sampling module cartridge 205. This allows the distal end 216 of the sampling module 209 loaded for use to be exposed to avoid contamination of the cartridge cover 221 with blood from the lancing process.

A reader module 222 is disposed over a distal portion of the sampling module 209 that is loaded in the drive coupler 213 for use and has two contact brushes 224 that are configured to align and make electrical contact with analyte detecting member contacts 225 of the sampling module 209 as shown in Figure 77. With electrical contact between the analyte detecting member contacts 225 and contact brushes 224, the processor 93 of the controllable driver 179 can read a signal from an analytical region 226 of the sampling module 209 after a lancing cycle is complete and a blood sample enters the analytical region 226 of the sampling module 209. The contact brushes 224 can have any suitable configuration that will allow the sampling module belt 208 to pass laterally beneath the contact brushes 224 and reliably make electrical contact with the sampling module 209 loaded in the drive coupler 213 and ready for use. A spring loaded conductive ball bearing is one example of a contact brush 224 that could be used. A resilient conductive strip shaped to press against the inside surface of the flexible polymer sheet 227 along the analyte detecting member region 228 of the sampling module 209 is another embodiment of a contact brush 224.

The sampling module cartridge 205 has a supply canister 229 and a receptacle canister 230. The unused sampling modules of the sampling module belt 208 are disposed within the supply canister 229 and the sampling modules of the sampling module belt 208 that have been used are advanced serially after use into the receptacle canister 230.

Figure 20 illustrates a further embodiment of sampling module cartridges. Figure 20 shows a sampling module cartridge 202 in a carousel configuration with adjacent sampling modules 204 connected rigidly and with analyte detecting members 206 from the analytical regions of the various sampling modules 204 disposed near an inner radius 208 of the carousel. The sampling modules 204 of the sampling module cartridge 202 are advanced through a drive coupler 213 but in a circular as opposed to a linear fashion.

Figure 21 shows an exploded view in perspective of the cartridge 245, which has a proximal end portion 254 and a distal end portion 255. The penetrating member cartridge body 246 is disposed at the proximal end portion 254 of the cartridge 245 and has a plurality of penetrating member module portions 250, such as the penetrating member module portion 250. Each penetrating member module portion 250 has a penetrating member channel 251 with a penetrating member 83 slidably disposed within the penetrating member channel 251. The penetrating member channels 251 are substantially parallel to the longitudinal axis 252 of the penetrating member cartridge body 246. The penetrating members 83 shown have a drive head 98, shaft portion 201 and sharpened tip 96. The drive head 98 of the penetrating members are configured to couple to a drive coupler (not shown), such as the drive coupler 85 discussed above.

The penetrating members 83 are free to slide in the respective penetrating member channels 251 and are nominally disposed with the sharpened tip 96 withdrawn into the penetrating member channel 251 to protect the tip 96 and allow relative rotational motion between the penetrating member cartridge body 246 and the sampling cartridge body 247 as shown by arrow 256 and arrow 257 in Figure 21. The radial center of each penetrating member channel 251 is disposed a fixed, known radial distance from the longitudinal axis 252 of the penetrating member cartridge body 246 and a longitudinal axis 258 of the cartridge 245. By disposing each penetrating member channel 251 a fixed known radial distance from the longitudinal axes 252 and 258 of the penetrating member cartridge body 246 and cartridge 245, the penetrating member channels 251 can then be readily and repeatably aligned in a functional arrangement with penetrating member channels 253 of the sampling cartridge body 247. The penetrating member cartridge body 246 rotates about a removable pivot shaft 259 which has a longitudinal axis 260 that is coaxial with the longitudinal axes 252 and 250 of the penetrating member cartridge body 246 and cartridge 245.

The sampling cartridge body 247 is disposed at the distal end portion 255 of the cartridge and has a plurality of sampling module portions 248 disposed radially about the longitudinal axis

249 of the sampling cartridge body 247. The longitudinal axis 249 of the sampling cartridge body 247 is coaxial with the longitudinal axes 252, 258 and 260 of the penetrating member cartridge body 246, cartridge 245 and pivot shaft 259. The sampling cartridge body 247 may also rotate about the pivot shaft 259. In order to achieve precise relative motion between the penetrating member cartridge body 246 and the sampling cartridge body 247, one or both of the cartridge bodies 246 and 247 may be rotatable about the pivot shaft 259, however, it is not necessary for both to be rotatable about the pivot shaft 259, that is, one of the cartridge bodies 246 and 247 may be secured, permanently or removably, to the pivot shaft 259.

The sampling cartridge body 247 includes a base 261 and a cover sheet 262 that covers a proximal surface 263 of the base forming a fluid tight seal. Each sampling module portion 248 of the sampling cartridge body 247, such as the sampling module portion 248, has a sample reservoir 264 and a penetrating member channel 253. The sample reservoir 264 has a vent 965 at an outward radial end that allows the sample reservoir 264 to readily fill with a fluid sample. The sample reservoir 264 is in fluid communication with the respective penetrating member channel 253 which extends substantially parallel to the longitudinal axis 249 of the sampling cartridge body 247. The penetrating member channel 253 is disposed at the inward radial end of the sample reservoir 264. Still further description of the device of Figure 21 may be found in commonly assigned, copending U.S. Patent Application Ser. No. 10/127,395 (Attorney Docket No. 38187-2551) filed April 19, 2002.

Referring to Figure 22A, one embodiment of the present invention is a tissue penetrating system 310 with a plurality of penetrating members 312 that each have a tissue penetrating tip 314. The number of penetrating members 310 can vary, but numbers in the ranges of 10, 15, 25, 50, 75, 100, 500 or any other number, are suitable. Each penetrating member 312 can be a lancet, a traditional lancet with a molded body, a needle with a lumen, a knife like element, an elongate member without molded attachments, and the like, and may have a size in the range of 20 mm to 10 mm in length and between 0.012-0.040 mm in diameter. It should be understood of course that penetrating members of a variety of different sizes useful for lancing such as those of conventional lancets may be used in other embodiments. As seen in Figure 22A, the penetrating member may have an elongate portion with a bend near a proximal end of the member.

Each penetrating member 312 is coupled to a penetrating member driver 316. Suitable penetrating member drivers 316 include but are not limited to, an electric drive force member, a voice coil drive force generator, a linear voice coil device, a rotary voice coil device, and the like. Suitable drive force generators can be found in commonly assigned, copending U.S. Patent

Application Ser. No. 10/127,395 (Attorney Docket No. 38187-2551) filed April 19, 2002. In one embodiment, the penetrating member driver or drive force generator 316 may be a single actuator used to advance the penetrating member and to withdraw the member. The driver 316 may also be used to stop the penetrating member in the tissue site. Penetrating member driver 316 can be a non-spring actuator for drawing penetrating member 312 in a direction back towards penetrating member driver 316. A coupler 318 on penetrating member driver 316 is configured to engage at least a portion of an elongate portion of a penetrating member 312 in order to drive the penetrating member 312 along a path into and through target tissue 320, and then withdrawn from target tissue 320.

Referring now to Figure 22B, the tips of the penetrating members 312 can be uncovered when they are launched into a selected target tissue 320. In one embodiment, sterility enclosures 322 are provided for covering at least the tip of each penetrating member 312. Figure 22B shows that the enclosure may also cover the entire lancet. In one embodiment, each sterility enclosure 322 is removed from the penetrating member 312 prior to actuation, launch, of penetrating member 312 and positioned so that penetrating member 312 does not contact the associated sterility enclosure 322 during actuation. As seen in Figure 22B, the enclosure 322 may be peel away to reveal the penetrating member 312 prior to coupling of the member 312 to the drive force generator 316. In another embodiment, each penetrating member 312 breaches its associated sterility enclosure 322 during launch.

Tissue penetrating system 310 can also include one or more penetrating member sensors 324 that are coupled to penetrating members 312. Examples of suitable penetrating member sensors 324 include but are not limited to, a capacitive incremental encoder, an incremental encoder, an optical encoder, an interference encoder, and the like. Each penetrating member sensor 324 is configured to provide information relative to a depth of penetration of a penetrating member 312 through a target tissue 320 surface, including but not limited to a skin surface, and the like. The penetrating member sensor 324 may be positioned as shown in Figure 22B. The penetrating member sensor 324 may also be positioned in a variety of location such as but not limited to being closer to the distal end of the penetrating member, in a position as shown in Figure 5, or in any other location useful for providing an indication of the position of a penetrating member 312 being driven by the force generator 316.

In various embodiments, the penetration depth of a penetrating member 312 through the surface of a target tissue 320 can be, 100 to 2500 microns, 500 to 750 microns, and the like. Each penetrating member sensor 324 can also provide an indication of velocity of a penetrating

member 312. Referring to Figure 22C, a damper 326 can be coupled to penetrating member driver 316. Damper 326 prevents multiple oscillations of penetrating member 312 in target tissue 320, particularly after penetrating member 312 has reached a desired depth of penetration. The damper 326 may be placed in a variety of positions such as but not limited to being coupled to the penetrating member, being coupled to the coupler 318, being coupled to a core or shaft in the drive force generator 316, or at any other position useful for slowing the motion of the penetrating member 312.

A feedback loop 328 can also be included that is coupled to penetrating member sensor 324. Each penetrating member 312 sensor can be coupled to a processor 330 that has control instructions for penetrating member driver 316. By way of illustration, and without limitation, processor 330 can include a memory for storage and retrieval of a set of penetrating member 312 profiles utilized with penetrating member driver 316. Processor 330 can also be utilized to monitor position and speed of a penetrating member 312 as it moves in first direction 332 to and through the target tissue 320.

Processor 330 can adjust an application of force to a penetrating member 312 in order to achieve a desired speed of a penetrating member 312. Additionally, processor 330 can also be used to adjust an application of force applied to a penetrating member 312 when penetrating member 312 contacts target tissue 320 so that penetrating member 312 penetrates target tissue 320 within a desired range of speed. Further, processor 330 can also monitor position and speed of a penetrating member 312 as penetrating member 312 moves in first direction 332 toward the target tissue 320. Application of a launching force to penetrating member 312 can be controlled based on position and speed of penetrating member 312. Processor 330 can control a withdraw force, from target tissue 320, to penetrating member 312 so that penetrating member 312 moves in second direction 334 away from target tissue 320.

Processor 330 can produce a signal that is indicative of a change in direction and magnitude of force exerted on penetrating member 312. Additionally, processor 330 can cause a braking force to be applied to penetrating member 312.

In one embodiment, in first direction 332 penetrating member 312 moves toward target tissue 320 at a speed that is different than a speed at which penetrating member 312 moves away from target tissue 320 in second direction 334. In one embodiment, the speed of penetrating member 312 in first direction 332 is greater than the speed of penetrating member 312 in second direction 334. The speed of penetrating member 312 in first direction 332 can be a variety of different ranges including but not limited to, 0.05 to 60 m/sec, 0.1 to 20.0 m/sec, 1.0 to 10.0

m/sec, 3.0 to 8.0 m/sec, and the like. Additionally, the dwell time of penetrating member 312 in target tissue 320, below a surface of the skin or other structure, can be in the range of, 1 microsecond to 2 seconds, 500 milliseconds to 1.5 second, 100 milliseconds to 1 second, and the like.

As seen in Figures 22A and 22B, tissue penetrating system 310 can include a penetrating member transport device 336 for moving each of penetrating member 312 into a position for alignment with penetrating member driver 316. Penetrating members 312 can be arranged in an array configuration by a number of different devices and structures defining support 338, including but not limited to, a belt, a flexible or non-flexible tape device, support channel, cog, a plurality of connectors, and the like. Support 338 can have a plurality of openings each receiving a penetrating member 312. Suitable supports 338 may also include but are not limited to, a bandolier, drum, disc and the like. A description of supports 338 can be found in commonly assigned, copending U.S. Patent Application Ser. No. 10/127,395 (Attorney Docket No. 38187-2551) filed April 19, 2002; commonly assigned, copending U.S. Provisional Patent Application Ser. No. _____ (Attorney Docket No. 38187-PA Feed) filed December 31, 2002; and commonly assigned, copending U.S. Provisional Patent Application Ser. No. _____ (Attorney Docket No. 38187-PA Feed) filed December 31, 2002. All applications listed above are fully incorporated herein by reference for all purposes.

As illustrated in Figure 23, tissue penetrating system 310 can include a single penetrating member driver 316 and a plurality of penetrating members 312. Penetrating member driver 316 moves each penetrating member 312 along a path out of a housing that has a penetrating member exit and then into target tissue 320, stopping in target tissue 320, and then withdrawing out of the target tissue 320. Support 338 couples the penetrating members 312 to define a linear array. Support 338 is movable and configured to move each penetrating member 312 to a launch position associated with penetrating member driver 316. Penetrating member driver 316 can be controlled to follow a predetermined velocity trajectory into and out of target tissue 320.

Tissue penetrating system 310 can include a user interface 340 configured to relay different information, including but not limited to, skin penetrating performance, a skin penetrating setting, and the like. User interface 340 can provide a user with at a variety of different outputs, including but not limited to, penetration depth of a penetrating member 312, velocity of a penetrating member 312, a desired velocity profile, a velocity of penetrating member 312 into target tissue 320, velocity of the penetrating member 312 out of target tissue 320, dwell time of penetrating member 312 in target tissue 320, a target tissue relaxation

parameter, and the like. User interface 340 can include a variety of components including but not limited to, a real time clock 342, one or more alarms 344 to provide a user with a reminder of a next target penetrating event is needed, a user interface processor 346, and the like.

User interface 340 can provide a variety of different outputs to a user including but not limited to, number of penetrating members 312 available, number of penetrating members 312 used, actual depth of penetrating member 312 penetration on target tissue 320, stratum corneum thickness in the case where the target tissue 320 is the skin and an area below the skin, force delivered on target tissue 320, energy used by penetrating member driver 316 to drive penetrating member 312 into target tissue 320, dwell time of penetrating member 312, battery status of tissue penetrating system 310, status of tissue penetrating system 310, the amount of energy consumed by tissue penetrating system 310, or any component of tissue penetrating system 310, speed profile of penetrating member 312, information relative to contact of penetrating member 312 with target tissue 320 before penetration by penetrating member 312, information relative to a change of speed of penetrating member 312 as in travels in target tissue 320, and the like.

User interface 340 can include a data interface 348 that couples tissue penetrating system 310 to support equipment 350 with an interface, the internet, and the like. The data interface 348 may also be coupled to the processor 93. Suitable support equipment 350 includes but is not limited to, a base station, home computer, central server, main processing equipment for storing analyte, such as glucose, level information, and the like.

Data interface 348 can be a variety of interfaces including but not limited to, Serial RS-232, modem interface, USB, HPNA, Ethernet, optical interface, IRDA, RF interface, Bluetooth interface, cellular telephone interface, two-way pager interface, parallel port interface standard, near field magnetic coupling, RF transceiver, telephone system, and the like.

User interface 340 be coupled to a memory 352 that stores, a target tissue parameter, target tissue 320 penetrating performance, and the like. The memory 352 may also be connected to processor 93 and store data from the user interface 340.

In one embodiment, memory 352 can store, the number of target tissue penetrating events, time and date of the last selected number of target tissue penetrating events, time interval between alarm and target tissue penetrating event, stratum corneum thickness, time of day, energy consumed by penetrating member driver 316 to drive penetrating member 312 into target tissue 320, depth of penetrating member 312 penetration, velocity of penetrating member 312, a desired velocity profile, velocity of penetrating member 312 into target tissue 320, velocity of

penetrating member 312 out of target tissue 320, dwell time of penetrating member 312 in target tissue 320, a target tissue relaxation parameter, force delivered on target tissue 320 by any component of tissue penetrating device, dwell time of penetrating member 312, battery status of tissue penetrating system 310, tissue penetrating system 310 status, consumed energy by tissue penetrating system 310 or any of its components, speed profile of penetrating member 312 as it penetrates and advances through target tissue 320, a tissue target tissue relaxation parameter, information relative to contact of penetrating member 312 with target tissue 320 before penetration by penetrating member 312, information relative to a change of speed of penetrating member 312 as in travels in and through target tissue 320, information relative to consumed analyte detecting members, and information relative to consumed penetrating members 312.

In one embodiment, processor 330 is coupled to and receives any of a different type of signals from user interface 340. User interface 340 can respond to a variety of different commands, including but not limited to audio commands, and the like. User interface 340 can include a sensor for detecting audio commands. Information can be relayed to a user of tissue penetrating system 310 by way of an audio device, wireless device, and the like.

In another embodiment as seen in Figure 23B, tissue penetrating device includes a human interface 354 with at least one output. The human interface 354 is specific for use by humans while a user interface 340 may be for any type of user, with user defined generically. Human interface 354 can be coupled to processor 330 and penetrating member sensor 324. Human interface 354 can be a variety of different varieties including but not limited to, LED, LED digital display, LCD display, sound generator, buzzer, vibrating device, and the like. The human interface 354 may also be related to the ability to evaluate human factors such as, but not limited to, tissue hydration, elastic tenting of tissue, target tissue relaxation parameters.

The output of human interface 354 can be a variety of outputs including but not limited to, a penetration event by penetrating member 312, number of penetrating members 312 remaining, time of day, alarm, penetrating member 312 trajectory waveform profile information, force of last penetration event, last penetration event, battery status of tissue penetrating system 310, analyte status, time to change cassette status, jamming malfunction, tissue penetrating system 310 status, and the like.

As a nonlimiting example, the human interface 354 is coupled to a housing 356. Suitable housings 356 include but are not limited to a, telephone, watch, PDA, electronic device, medical device, point of care device, decentralized diagnostic device and the like. An input device 358 is coupled to housing. Suitable input devices 358 include but are not limited to, one or more

pushbuttons, a touch pad independent of the display device, a touch sensitive screen on a visual display, and the like.

A data exchange device 360 can be utilized for coupling tissue penetrating system 310 to support equipment 350 including but not limited to, personal computer, modem, PDA, computer network, and the like. Human interface 354 can include a real time clock 362, and one or more alarms 364 that enable a user to set and use for reminders for the next target tissue penetration event. Human interface 354 can be coupled to a human interface processor 366 which is distinct from processor 330. Human interface processor 366 can include a sleep mode and can run intermittently to conserve power. Human interface processor 366 includes logic that can provide an alarm time set for a first subset of days, and a second alarm time set for a second subset of days. By way of example, and without limitation, the first subset of days can be Monday through Friday, and the second subset of days can be Saturday and Sunday.

Human interface 354 can be coupled to a memory 368 for storing a variety of information, including but not limited to, the number of target tissue penetrating events, time and date of the last selected number of target tissue penetrating events, time interval between alarm and target tissue penetrating event, stratum corneum thickness when target tissue 320 is below the skin surface and underlying tissue, time of day, energy consumed by penetrating member driver 316 to drive penetrating member 312 into target tissue 320, depth of penetrating member 312 penetration, velocity of penetrating member 312, a desired velocity profile, velocity of penetrating member 312 into target tissue 320, velocity of penetrating member 312 out of target tissue 320, dwell time of penetrating member 312 in target tissue 320, a target tissue relaxation parameter, force delivered on target tissue 320, dwell time of penetrating member 312, battery status of tissue penetrating system 310 and its components, tissue penetrating system 310 status, consumed energy, speed profile of penetrating member 312 as it advances through target tissue 320, a target tissue relaxation parameter, information relative to contact of a penetrating member 312 with target tissue 320 before penetration by penetrating member 312, information relative to a change of speed of penetrating member 312 as in travels in target tissue 320, information relative to consumed sensors, information relative to consumed penetrating members 312. The information stored may also be displayed by the lancing or tissue penetration system 310 on a display or similar technology.

As illustrated in Figure 24, tissue penetrating system 310 can include a penetrating member driver 316 and a plurality of cartridges 370. Each cartridge 370 contains a penetrating member 312. The cartridges 370 can be coupled together in an array, which can be a flexible

array. A cartridge transport device 372 moves cartridges 370 into a launch position that operatively couples a penetrating member 312 to penetrating member driver 316. A support couples cartridges 370 to define an array. A plurality of sterility enclosures 322 can be provided to at least cover tips of penetrating members 312. Sterility enclosure 322 (shown in phantom) is removed from their associated penetrating members 312 prior to launch of the penetrating member 312. The enclosure may be peeled away (not shown) in a manner similar to that as seen in Figure 22B, with the enclosure 322 on one tape surface being peeled away. The enclosure 322 may be a blister sack, a sack tightly formed about each cartridge 370, or other enclosure useful for maintaining a sterile environment about the cartridge 370 prior to actuation or launch. The enclosure 322 may contain the entire cartridge 370 or some portion of the cartridge 370 which may need to remain sterile prior to launch. During launch, enclosure or sterility barrier 322 can be breached by a device other than penetrating member 312, or can be breached by penetrating member 312 itself. An analyte detection member, sensor, may be positioned to receive fluid from a wound created by the penetrating member 312. The member may be on the cartridge 370 or may be on the device 80.

Referring to Figures 24 and 25, one embodiment of tissue penetrating system 310 includes cartridge transport device 372 and a plurality of cartridges 370. Each cartridge 370 is associated with a penetrating member 312. Cartridge transport device 372 moves each cartridge 370 to a position to align the associated penetrating member 312 with penetrating member driver 316 to drive penetrating member 312 along a path into target tissue 320. In one embodiment as seen in Figure 25, each cartridge 370 has at least one of a distal port 374 and a proximal port 376. A first seal 378 is positioned at distal or proximal ports. As seen in Figure 25, the seal 378 may be placed at the distal port. First seal 378 is formed of a material that is fractured by penetrating member 312 before it is launched. A second seal 380 can be positioned at the other port. It will be appreciated that only one or both of distal and proximal ports 374 and 376 can be sealed, and that each cartridge 370 can include only one port 374 and 376. For ease of illustration, the penetrating member 312 extending longitudinally through the lumen in the cartridge 370 is not shown. The seals 380 and 378 may be fracturable seals formed between the penetrating member and the cartridge 370. During actuation, the seals 378 and 380 are broken. Seal 378 may be also be positioned to cover the distal port or exit port 374 without being sealed against the penetrating member (i.e. covering the port without touching the penetrating member). A third seal 381 may be positioned to cover an entrance to sample chamber 384. The seal 381 may be configured to be broken when the penetrating member 312 is actuated. A still further

seal 381A may be placed in the lumen. The tip of a penetrating member may be located at any position along the lumen, and may also be at or surrounded by one of the seals 378, 381, 381A, or 376.

Referring still to Figure 25, a cover sheet 383 may be a flexible polymer sheet as described in commonly assigned, copending U.S. Patent Application Ser. No. 10/127,395 (Attorney Docket No. 38187-2551) filed April 19, 2002. It should be understood of course that the sheet may be made of a variety of materials useful for coupling an analyte detecting member 390. This allows the analyte detecting member 390 to be sterilized separately from the cartridge 370 and assembled together with the cartridge at a later time. This process may be used on certain analyte detecting members 390 that may be damaged if exposed to the sterilization process used on the cartridge 370. Of course, some embodiments may also have the analyte detecting member 390 coupled to the cartridge 370 during sterilization. The cover sheet 383 may also form part of the seal to maintain a sterile environment about portions of the penetrating member. In other embodiments, the lumen housing penetrating member may be enclosed and not use a sheet 383 to help form a sterile environment. In still further embodiments, the sheet 383 may be sized to focus on covering sample chamber 384.

As illustrated in Figure 26, cartridge 370 has at least one port 374. A plurality of penetrating members 312 are in cartridge 370. Although cartridge 370 is shown in Figure 26 to have a linear design, the cartridge 370 may also have a curved, round, circular, triangular, or other configuration useful for positioning a penetrating member for use with a drive force generator. A seal 382 is associated with each penetrating member 312 in order to maintain each penetrating member 312 in a sterile environment in cartridge 370 prior to launch. Prior to launch, seal 382 associated with the penetrating member 312 to be launched is broken. In one embodiment, a punch (not shown) is used to push down on the seal 382 covering the port 376 of the cartridge 370. This breaks the seal 382 and also pushes it downward, allowing the penetrating member to exit the cartridge without contacting the seal 382. The timing of the breaking of the seal 382 may be varied so long as the penetrating member remains substantially sterile when being launched towards the tissue site 320. In other embodiments, the port 376 may have a seal 383 that protrudes outward and is broken off by the downward motion of the punch. One or more sample chambers 384 are included in cartridge 370. In one embodiment, each penetrating member 312 has an associated sample chamber 384. In one embodiment, illustrated in Figure 27, penetrating member 312 is extendable through an opening 386 of its associated sample chamber 384. In some embodiments, a seal 387 may be included in the sample chamber

384. Seals 382 and 387 may be made from a variety of materials such as but not limited to metallic foil, aluminum foil, paper, polymeric material, or laminates combining any of the above. The seals may also be made of a fracturable material. The seals may be made of a material that can easily be broken when a device applies a force thereto. The seals alone or in combination with other barriers may be used to create a sterile environment about at least the tip of the penetrating member prior to lancing or actuation.

With reference now to the embodiment of Figure 28, each sample chamber 384 may have an opening 388 for transport of a body fluid into the sample chamber 384. The size of sample chambers 384 in Figures 26 through 28 can vary. In various embodiments, sample chambers 384 are sized to receive, no more than 1.0 μL of the body fluid, no more than 0.75 μL of the body fluid, no more than 0.5 μL of the body fluid, no more than 0.25 μL of the body fluid, no more than 0.1 μL of the body fluid, and the like. It will be appreciated that sample chambers 384 can have larger or smaller sizes.

An analyte detecting member 390 may associated with each sample chamber 384. The analyte detecting member 390 may be designed for use with a variety of different sensing techniques as described in commonly assigned, copending U.S. Patent Application Ser. No. 10/127,395 (Attorney Docket No. 38187-2551) filed April 19, 2002. Analyte detecting member 390 can be positioned in sample chamber 384, at an exterior of sample chamber 384, or at other locations useful for obtaining an analyte. Analyte detecting member 390 can be in a well 392, or merely be placed on a support.

In one embodiment, analyte detecting member 390 includes chemistries that are utilized to measure and detect glucose, and other analytes. In another embodiment, analyte detecting member 390 is utilized to detect and measure the amount of different analytes in a body fluid or sample. In various embodiments, analyte detecting member 390 determines a concentration of an analyte in a body fluid using a sample that does not exceed a volume of, 1 μL of a body fluid disposed in sample chamber 384, 0.75 μL of a body fluid disposed in sample chamber 384, 0.5 μL of a body fluid disposed in sample chamber 384, 0.25 μL of a body fluid disposed in sample chamber 384, 0.1 μL of a body fluid disposed in sample chamber 384, and the like. For example and not by way of limitation, the sample chamber 384 may be of a size larger than the volumes above, but the analyte detecting member 390 can obtain an analyte reading using the amounts of fluid described above.

As illustrated in Figure 29, tissue penetrating system 310 can include a housing member 394, a penetrating member 312 positioned in housing member 394, and analyte detecting member 390 coupled to a sample chamber 384. Analyte detecting member 390 is configured to determine a concentration of an analyte in a body fluid using with a variety of different body fluid, sample, volumes. In various embodiments, the volume is less than 1 μL of body fluid disposed in sample chamber 384, 0.75 of body fluid disposed in sample chamber 384, 0.5 of body fluid disposed in sample chamber 384, 0.25 of body fluid disposed in sample chamber 384, 0.1 of body fluid disposed in sample chamber 384 and the like. Each tip of a penetrating member 312 is configured to extend through an opening of sample chamber 384. A plurality of penetrating members 312 can be positioned in housing member 394. Housing member 394 can be the same as cartridge 370. Cartridge 370 can have distal and proximal ports 374 and 376, respectively. Additionally, in this embodiment, a plurality of cartridges 370 can be provided, each associated with a penetrating member 312.

Referring to Figure 30, each penetrating member 312 has a packing density, or occupied volume, in cartridge 370. In various embodiments, the packing density or occupied volume of each penetrating member in cartridge 500 may be no more than about 0.66 cm3, 0.05 cm3, 0.4 cm3, 0.3 cm3, 0.2 cm3, 0.1 cm3, 0.075 cm3, 0.05 cm3, 0.025 cm3, 0.01 cm3, 0.090 cm3, 0.080 cm3, and the like. These numbers applicable to volumes for penetrating members alone, or for combined penetrating members and analyte detecting members. In other words, the volume required for each penetrating member does not exceed 0.66 cm3/penetrating member, 0.05 cm3/penetrating member, 0.4 cm3/penetrating member, 0.3 cm3/penetrating member, 0.2 cm3/penetrating member, 0.1 cm3/penetrating member, 0.075 cm3/penetrating member, 0.05 cm3/penetrating member, 0.025 cm3/penetrating member, 0.01 cm3/penetrating member, 0.090 cm3/penetrating member and the like. So, if the total package volume of the cartridge is defined as X and the cartridge includes Y number of penetrating members, penetrating members and test area, or other unit 395, the volume for each unit does not exceed 0.66 cm3, 0.05 cm3, 0.4 cm3, 0.3 cm3, 0.2 cm3, 0.1 cm3, 0.075 cm3, 0.05 cm3, 0.025 cm3, 0.01 cm3, 0.090 cm3, 0.080 cm3, and the like.

In various embodiments, each penetrating member 312 and its associated sample chamber 384 have a combined packing density of no more than about 5.0 cm3, 4.0 cm3, 3.0 cm3, 2.0 cm3, 1.0 cm3, 0.75 cm3, 0.5 cm3, 0.25 cm3, 0.1 cm3, and the like.

With reference now to Figure 31, tissue penetrating system 310 can have a first seal 378 formed at distal port 374 and a second seal 380 formed at proximal port 376 of cartridge 370.

Prior to launching of penetrating member 312, distal seal 378 and second seal 380 maintain a distal tip of penetrating member 312 and sample chamber 384 in a sterile environment. Second seal 380 is breached, and penetrating member 312 is then launched.

As illustrated in Figure 32, a plurality of lumens 396 can be positioned between distal port 374 and proximal port 376 of cartridge 370 for slidably receiving a penetrating member 312. Sample chamber 384 is defined by cartridge 370, has an opening 398 and is associated with penetrating member 312. First seal 378 covers distal port 374, and a second seal 380 covers proximal port 376.

In another embodiment as shown in Figure 33, tissue penetrating system 310 includes a plurality of cartridges 370, penetrating member driver 316, and a plurality of penetrating members 312 coupled to penetrating member driver 316. Each penetrating member 312 is associated with a cartridge 370. A plurality of gas-tightly sealed enclosures 400 are coupled in an array. Each enclosure 400 fully contains at least one of cartridge 370. Enclosures 400 are configured to be advanceable on cartridge transport device 372 that individually releases cartridges 370 from sacks or enclosures 400 and loads them individually onto penetrating member driver 316. The enclosures 400 may be removed by peeling back a top portion of the tape as shown in Figure 22B.

In another embodiment, a plurality of penetrating members 312 each have a sharpened distal tip. A penetrating member driver 316 is coupled to each penetrating member 312. A plurality of cartridges 370 are coupled in an array. Each cartridge 370 houses a penetrating member 312 and is configured to permit penetrating member driver 316 to engage each of penetrating members 312 sequentially. Each cartridge 370 has a plurality of seals positioned to provide that the sharpened distal tips remain in a sterile environment before penetrating target tissue 320. Penetrating members 312 are launched without breaking a seal using the penetrating member.

Referring now to Figure 34, a plurality of cartridges 370 are provided, each having distal and proximal ports 374 and 376, respectively. A plurality of penetrating members 312 are each associated with a cartridge 370. Each penetrating member 312 has a sharpened distal tip and a shaft portion slidably disposed within cartridge 370. As seen in Figure 34, the cartridges 370 may be coupled together by a connector or flexible support 403. A seal 404 is formed by a fracturable material between the penetrating member 312 and each cartridge 370. Seal 404 is positioned in at least one of distal or proximal ports 374 and 376, respectively, of cartridge 370. Cartridge transport device 372 moves each cartridge 370 to a position 405 that aligns penetrating

member 312 with penetrating member driver 316 so that penetrating member 312 can be driven along a path into target tissue 320.

In another embodiment of the present invention as seen in Figure 35, tissue penetrating system 310 includes a housing member 406, the plurality of penetrating members 312 positioned in housing member 406, and a tissue stabilizing member 408, which can also be a pressure applicator, stimulating member, stimulating vibratory member that imparts motion to a tissue surface, and the like. Tissue stabilizing member 408 can be positioned to at least partially surround an impact location of the penetrating member 312 on the target tissue 320 site. Tissue stabilizing member 408 can, enhance fluid flow from target tissue 320, stretch a target tissue 320 surface, apply a vacuum to target tissue 320, apply a force to target tissue 320 and cause target tissue 320 to press in an inward direction relative to housing member 406, apply a stimulation to target tissue 320, and the like. Tissue stabilizing member 408 can have a variety of different configurations. In one embodiment, tissue stabilizer member 408 includes a plurality of protrusions 410. In some further embodiments, a vacuum source 412 may be provided to assist the creation of a low pressure environment in the tissue stabilizing member 408 or along the fluid path to a sample chamber associated with the system 310. In some embodiments, the tissue stabilizing member 408 is mounted on the cartridge 370. In other embodiments, the member 408 may be mounted on the housing 406. The member 408 may also be pressed against the tissue site 320 and act as a pressure applicator. The member 408 may also be used against a variety of tissue including but not limited to skin or other body tissue.

Referring now to Figures 36 and 37, a cartridge 370 is shown with a penetrating member 312 creating a wound W in the tissue site 320. In Figure 36, a movable capillary member 420 is extended towards the wound W as indicated by arrow 422 to gather body fluid being expressed from the wound. The fluid may be drawn to a sample chamber 384 (not shown). In Figure 37, the wound W is created and then the entire cartridge is moved to the tissue site 320 to gather body fluid from the wound W. In some embodiments, the cartridge 370 moves towards the wound W relative to the housing 406.

Tissue penetrating systems 310 of Figures 22 through 37, can be utilized in a variety of different applications to detect any number of different analytes, including but not limited to glucose. The systems 310 may be used to measure potassium, other ions, or analytes associated with the process of glucose monitoring. The analyte detecting member 390 may further be adapted to measure other analytes found in body fluid.

In a still further embodiment, penetrating member 312 may be moved and positioned to be in engagement with penetrating member driver 316. Penetrating member 312 is in a sterile environment, and prior to launch, the sterilizing covering, which can be a seal is removed. Tissue stabilizing member can apply a stimulation to a surface of the target tissue 320 prior to, and during penetration by penetration member. Penetrating member 312 is engaged with penetrating driving member and controllably pierces a target tissue 320 site. Penetrating member sensor 324 is utilized to control penetration depth and velocity of penetrating member 312. Penetrating member 312 is stopped at a desired depth below a surface of target tissue 320 in order to reduce or eliminate without multiple oscillations against the surface of target tissue 320. A wound is created, causing blood to flow into sample chamber 384. In various embodiments, no more than 1 μL of a body fluid is collected in sample chamber 384.

A number of different preferences, options, embodiment, and features have been given above, and following any one of these may results in an embodiment of this invention that is more presently preferred than a embodiment in which that particular preference is not followed. These preferences, options, embodiment, and features may be generally independent, and additive; and following more than one of these preferences may result in a more presently preferred embodiment than one in which fewer of the preferences are followed.

While the invention has been described and illustrated with reference to certain particular embodiments thereof, those skilled in the art will appreciate that various adaptations, changes, modifications, substitutions, deletions, or additions of procedures and protocols may be made without departing from the spirit and scope of the invention. Any of the embodiments of the invention may be modified to include any of the features described above or feature incorporated by reference herein. For example, the cartridge of Figure 26 may be adapted to include a distal portion with a tissue stabilizing member. The cartridge of Figure 26 may be adapted for use with a vacuum device. The cartridge may include indexing features such as notches on the distal portion or outer radial periphery for those cartridges with a radial configuration. The notches will facilitate positioning, among other things, and may be used for movement. Other cartridges or tapes herein may be modified with notches or tractor holes to facilitate movement. User interfaces, human interfaces, and other interfaces may be added to any of the embodiments of the present invention.

With any of the above embodiments, the location of the penetrating member drive device may be varied, relative to the penetrating members or the cartridge. With any of the above embodiments, the penetrating member tips may be uncovered during actuation (i.e. penetrating

members do not pierce the penetrating member enclosure or protective foil during launch). With any of the above embodiments, the penetrating members may be a bare penetrating member during launch. With any of the above embodiments, the penetrating members may be bare penetrating members prior to launch as this may allow for significantly tighter densities of penetrating members. In some embodiments, the penetrating members may be bent, curved, textured, shaped, or otherwise treated at a proximal end or area to facilitate handling by an actuator. The penetrating member may be configured to have a notch or groove to facilitate coupling to a gripper or coupler. The notch or groove may be formed along an elongate portion of the penetrating member. The coupler may be designed to create a frictional only type grip on the penetrating member.

With any of the above embodiments, any open cavity housing the penetrating may be on the bottom or the top of the cartridge, with the gripper on the other side. In some embodiments, sensors may be printed on the top, bottom, or side of the cavities. The front end of the cartridge maybe in contact with a user during lancing. The same driver may be used for advancing and retraction of the penetrating member. The penetrating member may have a diameters and length suitable for obtaining the blood volumes described herein. The penetrating member driver may also be in substantially the same plane as the cartridge. The driver may use a through hole or other opening to engage a proximal end of a penetrating member to actuate the penetrating member along a path into and out of the tissue.

Any of the features described in this application or any reference disclosed herein may be adapted for use with any embodiment of the present invention. For example, the devices of the present invention may also be combined for use with injection penetrating members or needles as described in commonly assigned, copending U.S. Patent Application Ser. No. 10/127,395 (Attorney Docket No. 38187-2551) filed April 19, 2002. A sensor to detect the presence of foil may also be included in the lancing apparatus. For example, if a cavity has been used before, the foil or sterility barrier will be punched. The sensor can detect if the cavity is fresh or not based on the status of the barrier. It should be understood that in optional embodiments, the sterility barrier may be designed to pierce a sterility barrier of thickness that does not dull a tip of the penetrating member. The lancing apparatus may also use improved drive mechanisms. For example, a solenoid force generator may be improved to try to increase the amount of force the solenoid can generate for a given current. A solenoid for use with the present invention may have five coils and in the present embodiment the slug is roughly the size of two coils. One change is to increase the thickness of the outer metal shell or windings surround the coils. By

increasing the thickness, the flux will also be increased. The slug may be split; two smaller slugs may also be used and offset by ½ of a coil pitch. This allows more slugs to be approaching a coil where it could be accelerated. This creates more events where a slug is approaching a coil, creating a more efficient system.

In another optional alternative embodiment, a gripper in the inner end of the protective cavity may hold the penetrating member during shipment and after use, eliminating the feature of using the foil, protective end, or other part to retain the used penetrating member. Some other advantages of the disclosed embodiments and features of additional embodiments include: same mechanism for transferring the used penetrating members to a storage area; a high number of penetrating members such as 25, 50, 75, 100, 500, or more penetrating members may be put on a disk or cartridge; molded body about a penetrating member becomes unnecessary; manufacturing of multiple penetrating member devices is simplified through the use of cartridges; handling is possible of bare rods metal wires, without any additional structural features, to actuate them into tissue; maintaining extreme (better than 50 micron -lateral- and better than 20 micron vertical) precision in guiding; and storage system for new and used penetrating members, with individual cavities/slots is provided. The housing of the lancing device may also be sized to be ergonomically pleasing. In one embodiment, the device has a width of about 56 mm, a length of about 105 mm and a thickness of about 15 mm. Additionally, some embodiments of the present invention may be used with non-electrical force generators or drive mechanism. For example, the punch device and methods for releasing the penetrating members from sterile enclosures could be adapted for use with spring based launchers. The gripper using a frictional coupling may also be adapted for use with other drive technologies.

Still further optional features may be included with the present invention. For example, with any of the above embodiments, the location of the penetrating member drive device may be varied, relative to the penetrating members or the cartridge. With any of the above embodiments, the penetrating member tips may be uncovered during actuation (i.e. penetrating members do not pierce the penetrating member enclosure or protective foil during launch). The penetrating members may be a bare penetrating member during launch. The same driver may be used for advancing and retraction of the penetrating member. Different analyte detecting members detecting different ranges of glucose concentration, different analytes, or the like may be combined for use with each penetrating member. Non-potentiometric measurement techniques may also be used for analyte detection. For example, direct electron transfer of glucose oxidase molecules adsorbed onto carbon nanotube powder microelectrode may be used

to measure glucose levels. In all methods, nanoscopic wire growth can be carried out via chemical vapor deposition (CVD). In all of the embodiments of the invention, preferred nanoscopic wires may be nanotubes. Any method useful for depositing a glucose oxidase or other analyte detection material on a nanowire or nanotube may be used with the present invention. The present application is related to commonly assigned, co-pending U.S. Patent Application Ser. Nos. 10/335,215; 10/335,258; 10/335,099; 10/335,219; 10/335,052; 10/335,073; 10/335,220; 10/335,252; 10/335,218; 10/335,211; US: 10/335,257; 10/335,217; 10/335,212; 10/335,241; 10/335,183; 10/335,082; 10/335,240; 10/335,259; 10/335,182; (Attorney Docket Nos. 38187-2633 through 38187-2653), filed December 31, 2002, which are fully incorporated herein by reference for all purposes. Any and all of the dependent claims which follow may be combined with any of the independent claims that follow. Expected variations or differences in the results are contemplated in accordance with the objects and practices of the present invention. It is intended, therefore, that the invention be defined by the scope of the claims which follow and that such claims be interpreted as broadly as is reasonable.

WHAT IS CLAIMED IS:

1. A tissue penetration device, comprising:

a penetrating member driver;

a penetrating member sensor, the penetrating member sensor positioned and configured to provide information relative to a depth of penetration of a penetrating member through a tissue surface.

2. A tissue penetrating system, comprising:

a plurality of penetrating members;

a penetrating member driver coupled to the plurality of penetrating members;

a cartridge transport device; and

a plurality of cartridges each associated with a penetrating member, the cartridge transport device being configured to move each cartridge to a position aligning a penetrating member with the penetrating member driver to drive the penetrating member along a path into a target tissue site.

3. The system of claim 2, further comprising:

a penetrating member sensor coupled to the plurality of penetrating members, the penetrating member sensor configured to provide information relative to a depth of penetration of a penetrating member through a skin surface.

4. A tissue penetrating device, comprising:

a penetrating member;

a penetrating member driver coupled to the penetrating member;

a penetrating member sensor coupled to the penetrating member, the penetrating member sensor configured to provide information relative to a depth of penetration of a penetrating member through a skin surface; and

a processor coupled to the penetrating member sensor, the processor producing a signal indicative of a change in direction and magnitude of force exerted on the penetrating member, the processor further configured to cause application of a braking force to the penetrating member.

5. The system of claim 4, wherein the braking force is utilized to assist in achieving a desired amount of skin penetration depth by the penetrating member.

6. The system of claim 4, wherein the braking force reduces multiple oscillations of the penetrating member a target tissue.

7. The system of claim 4, further comprising: a user interface configured to relay at least one of, skin penetrating performance or a skin penetrating setting.

8. The system of claim 4, further comprising:

a user interface configured to relay at least one of, skin penetrating performance or a skin penetrating setting.

9. The system of claim 4, further comprising:

a human interface coupled to the penetrating member driver and providing at least one output.

10. A skin penetrating device, comprising:

a penetrating member driver;

a penetrating member coupled to the penetrating member driver; and

a damper coupled to the penetrating member driver for preventing multiple oscillations of the penetrating member in the tissue target once the penetrating member has reached a desired depth.

11. The system of claim 10, further comprising:

a penetrating member sensor coupled to the penetrating member, the penetrating member sensor configured to provide information relative to a depth of penetration of a penetrating member through a skin surface.

12. The system of claim 10, further comprising:

a user interface configured to relay at least one of, skin penetrating performance or a skin penetrating setting..

13. The system of claim 10, further comprising:

a human interface coupled to the penetrating member driver and providing at least one output.

14. A method of penetrating a target tissue, comprising:

advancing a penetrating member through the target tissue;

stopping the penetrating member at a desired depth below a skin surface without multiple oscillations against the skin surface; and

withdrawing the penetrating member from the target tissue.

15. The method of claim 14, further comprising:

monitoring position and speed of the penetrating member as the penetrating member moves in the first direction toward the target tissue.

16. The method of claim 14, further comprising:

adjusting an application of force to the penetrating member to achieve a desired speed of the penetrating member.

17. The method of claim 14, further comprising:

adjusting an application of force to the penetrating member when the penetrating member contacts the skin surface so that the penetrating member penetrates the skin surface within a desired range of speed.

18. The method of claim 14, further comprising:

monitoring position and speed of the penetrating member as the penetrating member moves in a first direction toward the target tissue, wherein the application of a launching force to the penetrating member is controlled based on position and speed of the penetrating member.

19. The method of claim 18, further comprising:

controlling a withdraw force to the penetrating member so that the penetrating member moves in a second direction away from the target tissue.

20. A method of penetrating a target tissue, comprising:

providing a tissue penetrating system including a penetrating member driver, a plurality of cartridges, a plurality of penetrating members each associated with a cartridge, a plurality of sample chambers each associated with a penetrating member, and a penetrating member sensor;

advancing a penetrating member from a cartridge into the target tissue;

withdrawing the penetrating member from the target tissue; and

receiving an analyte sample in a sample chamber.

21. The method of claim 20, further comprising:

monitoring position and speed of the penetrating member as the penetrating member moves in the first direction toward the target tissue.

22. The method of claim 20, further comprising:

adjusting an application of force to the penetrating member to achieve a desired speed of the penetrating member.

23. The method of claim 20, further comprising:

adjusting an application of force to the penetrating member when the penetrating member contacts the skin surface so that the penetrating member penetrates the skin surface within a desired range of speed.

24. The method of claim 20, further comprising:

monitoring position and speed of the penetrating member as the penetrating member moves in a first direction toward the target tissue, wherein the application of a launching force to the penetrating member is controlled based on position and speed of the penetrating member.

25. The method of claim 24, further comprising:

controlling a withdraw force to the penetrating member so that the penetrating member moves in a second direction away from the target tissue.

26. A body fluid sampling system for use on a tissue site, the system comprising:

an electrically powered drive force generator;

a penetrating member operatively coupled to said force generator, said force generator moving said member along a path out of a housing having a penetrating member exit, into said tissue site, stopping in said tissue site, and withdrawing out of said tissue site;

an analyte detecting member positioned to receive fluid from a wound created by said penetrating member, said detection member configured to determine a concentration of an analyte in the fluid using a sample of less than 1 μL of the fluid.

27. A body fluid sampling system for use on a tissue site, the system comprising:

a drive force generator;

a penetrating member operatively coupled to said force generator, said force generator moving said member along a path out of a housing having a penetrating member exit, into said tissue site, stopping in said tissue site, and withdrawing out of said tissue site;

said drive force generator configured to be controlled to follow a predetermined velocity trajectory into the tissue and out of said tissue;

an analyte detecting member positioned to receive fluid from a wound created by said penetrating member, said detection member configured to determine a concentration of an analyte in the fluid using a sample of less than 1 μL of the fluid.

28. The system of claim 27 further comprising:

a position sensor positioned to provide an indication of a position of the penetrating member during actuation;

29. The system of claim 27 further comprising:

wherein said penetrating member is an elongate member without a molded attachment;

a coupler on said force generator configured to engage at least a portion of said elongate portion of the penetrating member and drive said member along a path into a tissue site and withdrawn from a tissue site;

30. A body fluid sampling system for use on a tissue site, the system comprising:

a drive force generator;

a plurality of cartridges each containing a penetrating member, each of said cartridges coupled together to define a flexible array;

a transport device for moving each of said cartridges into a launch position operatively coupling said penetrating member to the force generator;

an analyte detecting member positioned to receive fluid from a wound created by said penetrating member, said detection member configured to determine a concentration of an analyte in the fluid using a sample of less than 1 μL of the fluid.

31. A body fluid sampling system for use on a tissue site, the system comprising:

a drive force generator;

a penetrating member having an elongate portion without a molded attachment and operatively coupled to said force generator;

a sterility enclosure covering at least a tip of said penetrating member, said sterility enclosure removed from said penetrating member prior to actuation of the member and positioned so that the penetrating member will not contact said enclosure during actuation;

an analyte detecting member positioned to receive fluid from a wound created by said penetrating member, said detection member configured to determine a concentration of an analyte in the fluid using a sample of less than 1 μL of the fluid.

32. A body fluid sampling system for use on a tissue site, the system comprising:

a drive force generator;

a penetrating member having an elongate portion without a molded attachment and operatively coupled to said force generator;

a sterility enclosure creating a sterile environment around at least a tip of said penetrating member, said penetrating member breaching said sterile environment during actuation;

an analyte detecting member positioned to receive fluid from a wound created by said penetrating member, said detection member configured to determine a concentration of an analyte in the fluid using a sample of less than 1 μL of the fluid.

33. The system of claim further comprising:

a skin stabilizer device suitable for stretching a surface of a tissue site, said skin stabilizer at least partially surrounding the penetrating member exit;

an analyte detecting member positioned to receive fluid from a wound created by said penetrating member, said detection member configured to determine a concentration of an analyte in the fluid using a sample of less than 1 μL of the fluid.

34. The system of claim further comprising:

a user interface for transmitting at least one input between a user;

an analyte detecting member positioned to receive fluid from a wound created by said penetrating member, said detection member configured to determine a concentration of an analyte in the fluid using a sample of less than 1 μL of the fluid.

35. A body fluid sampling system for use on a tissue site, the system comprising:

a drive force generator;

a penetrating member operatively coupled to said force generator, said force generator moving said member along a path out of a housing having a penetrating member exit, into said tissue site, stopping in said tissue site, and withdrawing out of said tissue site;

said drive force generator configured to be controlled to follow a predetermined velocity trajectory into the tissue and out of said tissue;

a tissue stabilizing member associated with the device and at least partially surrounding an impact location of the penetrating member on said tissue site.

36. A body fluid sampling system for use on a tissue site, the system comprising:

a housing;

an electrically powered drive force generator

a penetrating member operatively coupled to the force generator, the force generator moving the member along a path out of the housing having a penetrating member exit, into the tissue site, stopping in the tissue site, and withdrawing out of the tissue site;

a tissue stabilizing member associated with said housing and positioned to at least partially surround an impact location of the penetrating member on the tissue site.

37. The system of claim :

a position sensor used to determine a position of the penetrating member during actuation;

38. A body fluid sampling system for use on a tissue site, the system comprising:

a drive force generator;

a penetrating member operatively coupled to said force generator, said force generator moving said member along a path out of a housing having a penetrating member exit, into said tissue site, stopping in said tissue site, and withdrawing out of said tissue site;

wherein said penetrating member is an elongate member without a molded attachment.

a coupler on said force generator configured to engage at least a portion of said elongate portion of the penetrating member and drive said member along a path into a tissue site and withdrawn from a tissue site;

a tissue stabilizing member associated with said housing and positioned to at least partially surround an impact location of the penetrating member on the tissue site

39. A body fluid sampling system for use on a tissue site, the system comprising:

a voice coil drive force generator;

a plurality of modules each containing a penetrating member, each of said modules coupled together to define a flexible array;

a transport device for moving each of said modules into a launch position operatively coupling said penetrating member to the force generator.

a tissue stabilizing member associated with said housing and positioned to at least partially surround an impact location of the penetrating member on the tissue site.

40. A body fluid sampling system for use on a tissue site, the system comprising:

a drive force generator;

a penetrating member having an elongate portion without a molded attachment and operatively coupled to said force generator;

a sterility enclosure covering at least a tip of said penetrating member, said sterility enclosure removed from said penetrating member prior to actuation of the member and positioned so that the penetrating member will not contact said enclosure during actuation.

a tissue stabilizing member associated with said housing and positioned to at least partially surround an impact location of the penetrating member on the tissue site.

41. A body fluid sampling system for use on a tissue site, the system comprising:

a drive force generator;

a penetrating member having an elongate portion without a molded attachment and operatively coupled to said force generator;

a sterility enclosure creating a sterile environment around at least a tip of said penetrating member, said penetrating member breaching said sterile environment during actuation;

a tissue stabilizing member associated with said housing and positioned to at least partially surround an impact location of the penetrating member on the tissue site.

42. A body fluid sampling system for use on a tissue site, the system comprising:

a drive force generator;

a penetrating member operatively coupled to said force generator, said force generator moving said member along a path out of a housing having a penetrating member exit, into said tissue site, stopping in said tissue site, and withdrawing out of said tissue site;

an analyte detection member positioned to receive fluid from a wound created by said penetrating member, said detection member configured to determine a concentration of an analyte in the fluid using a sample of less than 1 μL of the fluid;

a tissue stabilizing member associated with said housing and positioned to at least partially surround an impact location of the penetrating member on the tissue site.

43. A body fluid sampling system for use on a tissue site, the system comprising:

an electrically powered drive force generator

a penetrating member operatively coupled to said force generator, said force generator moving said member along a path out of a housing having a penetrating member exit, into said tissue site, stopping in said tissue site, and withdrawing out of said tissue site;

a vacuum source associated with said device for creating a lower atmosphere environment to draw fluid from a wound created by said penetrating member.

44. A body fluid sampling system for use on a tissue site, the system comprising:

an electrically powered drive force generator

a penetrating member operatively coupled to said force generator, said force generator moving said member along a path out of a housing having a penetrating member exit, into said tissue site, stopping in said tissue site, and withdrawing out of said tissue site; and

a movable capillary tube advancable between a first position and a second position.

45. A body fluid sampling system for use on a tissue site, the system comprising:

a voice coil based penetrating member driver;

a plurality of penetrating members;

a transport mechanism configured to engage said cartridges, wherein each of said cartridges are operatively engaged with said penetrating member driver when moved into position by said transport mechanism.

46. A body fluid sampling system for use on a tissue site, the system comprising:

a voice coil drive force generator;

a penetrating member having an elongate portion without a molded attachment;

a coupler on said force generator configured to engage at least a portion of said elongate portion of the penetrating member and drive said member along a path into a tissue site and withdrawn from a tissue site.

47. A body fluid sampling system for use on a tissue site, the system comprising:

a voice coil drive force generator;

a penetrating member having an elongate portion without a molded attachment and operatively coupled to said force generator;

a sterility enclosure covering at least a tip of said penetrating member, said sterility enclosure removed from said penetrating member prior to actuation of the member and positioned so that the penetrating member will not contact said enclosure during actuation.

48. A body fluid sampling system for use on a tissue site, the system comprising:

a voice coil drive force generator;

a penetrating member having an elongate portion without a molded attachment and operatively coupled to said force generator;

a sterility enclosure creating a sterile environment around at least a tip of said penetrating member, said penetrating member breaching said sterile environment during actuation.

49. A body fluid sampling system for use on a tissue site, the system comprising:

a voice coil drive force generator;

a penetrating member operatively coupled to said force generator, said force generator moving said member along a path out of a housing having said a penetrating member exit, into said tissue site, stopping in said tissue site, and withdrawing out of said tissue site;

a tissue stabilizer device suitable for stretching a surface of a tissue site, said tissue stabilizer at least partially surrounding the penetrating member exit.

50. A body fluid sampling system for use on a tissue site, the system comprising:

a voice coil drive force generator;

a penetrating member operatively coupled to said force generator, said force generator moving said member along a path out of a housing having said a penetrating member exit, into said tissue site, stopping in said tissue site, and withdrawing out of said tissue site;

a pressure applicator coupled to the housing.

51. A body fluid sampling system for use on a tissue site, the system comprising:

a voice coil drive force generator;

a penetrating member operatively coupled to said force generator, said force generator moving said member along a path out of a housing having a penetrating member exit, into said tissue site, stopping in said tissue site, and withdrawing out of said tissue site;

an analyte detection member positioned to receive fluid from a wound created by said penetrating member, said detection member configured to determine a concentration of an analyte in the fluid using a sample of less than 1 μL of the fluid.

52. A body fluid sampling system for use on a tissue site, the system comprising:

a voice coil drive force generator;

a penetrating member operatively coupled to said force generator, said force generator moving said member along a path out of a housing having a penetrating member exit, into said tissue site, stopping in said tissue site, and withdrawing out of said tissue site;

an analyte detection member positioned to receive fluid from a wound created by said penetrating member, said detection member configured to determine a concentration of an analyte in the fluid using a sample of less than 1 μL of the fluid.

53. A body fluid sampling system for use on a tissue site, the system comprising:

a single drive force generator;

a plurality of penetrating members operatively coupled to said force generator, said force generator moving each of said members along a path out of a housing having a penetrating member exit, into said tissue site, stopping in said tissue site, and withdrawing out of said tissue site;

a flexible support member coupling said penetrating members to define a linear array, said support member being movable and configured to move each of said penetrating members to a launch position associated with said force generator.

54. A body fluid sampling system for use on a tissue site, the system comprising:

a drive force generator

a plurality of penetrating members operatively coupled to said force generator, said force generator moving each of said members along a path out of a housing having a penetrating member exit, into said tissue site, stopping in said tissue site, and withdrawing out of said tissue site;

a flexible support member coupling said penetrating members to define a linear array, said support member being movable and configured to move each of said penetrating members to a launch position associated with said force generator.

said drive force generator configured to be controlled to follow a predetermined velocity trajectory into the tissue and out of said tissue.

55. A body fluid sampling system for use on a tissue site, the system comprising:

a drive force generator

a plurality of penetrating members operatively coupled to said force generator, said force generator moving each of said members along a path out of a housing having a penetrating member exit, into said tissue site, stopping in said tissue site, and withdrawing out of said tissue site;

a flexible support member coupling said penetrating members to define a linear array, said support member being movable and configured to move each of said penetrating members to a launch position associated with said force generator.

a position sensor configured to provide an indication of a position of the penetrating member during actuation.

56. A body fluid sampling system for use on a tissue site, the system comprising:

a drive force generator

a plurality of penetrating members operatively coupled to said force generator, said force generator moving each of said members along a path out of a housing having a penetrating member exit, into said tissue site, stopping in said tissue site, and withdrawing out of said tissue site;

a flexible support member coupling said penetrating members to define a linear array, said support member being movable and configured to move each of said penetrating members to a launch position associated with said force generator.

wherein said penetrating member is an elongate member without a molded attachment.

a coupler on said force generator configured to engage at least a portion of said elongate portion of the penetrating member and drive said member along a path into a tissue site and withdrawn from a tissue site.

57. A body fluid sampling system for use on a tissue site, the system comprising:

an electrically powered drive force generator;

a plurality of cartridges each containing a penetrating member, each of said cartridges coupled together to define a flexible array;

a transport device for moving each of said cartridges into a launch position operatively coupling said penetrating member to the force generator.

a flexible support member coupling said cartridges to define a linear array, said support member being movable and configured to move each of said cartridges to said launch position associated with said force generator.

58. A body fluid sampling system for use on a tissue site, the system comprising:

a drive force generator;

a plurality of penetrating members operatively coupled to said force generator, said force generator moving each of said members along a path out of a housing having a penetrating member exit, into said tissue site, stopping in said tissue site, and withdrawing out of said tissue site;

a flexible support member coupling said penetrating members to define a linear array, said support member being movable and configured to move each of said penetrating members to a launch position associated with said force generator;

a sterility enclosure covering at least a tip of said penetrating member, said sterility enclosure removed from said penetrating member prior to actuation of the member and positioned so that the penetrating member will not contact said enclosure during actuation.

59. A body fluid sampling system for use on a tissue site, the system comprising:

a drive force generator;

a plurality of penetrating members operatively coupled to said force generator, said force generator moving each of said members along a path out of a housing having a penetrating member exit, into said tissue site, stopping in said tissue site, and withdrawing out of said tissue site;

a flexible support member coupling said penetrating members to define a linear array, said support member being movable and configured to move each of said penetrating members to a launch position associated with said force generator;

a sterility enclosure creating a sterile environment around at least a tip of said penetrating member, said penetrating member breaching said sterile environment during actuation.

60. A body fluid sampling system for use on a tissue site, the system comprising:

a drive force generator;

a plurality of penetrating members operatively coupled to said force generator, said force generator moving each of said members along a path out of a housing having a penetrating member exit, into said tissue site, stopping in said tissue site, and withdrawing out of said tissue site;

a flexible support member coupling said penetrating members to define a linear array, said support member being movable and configured to move each of said penetrating members to a launch position associated with said force generator;

a skin stabilizer device suitable for stretching a surface of a tissue site, said skin stabilizer at least partially surrounding the penetrating member exit.

61. A body fluid sampling system for use on a tissue site, the system comprising:

a drive force generator;

a plurality of penetrating members operatively coupled to said force generator, said force generator moving each of said members along a path out of a housing having a

penetrating member exit, into said tissue site, stopping in said tissue site, and withdrawing out of said tissue site;

a flexible support member coupling said penetrating members to define a linear array, said support member being movable and configured to move each of said penetrating members to a launch position associated with said force generator;

an analyte detection member positioned to receive fluid from a wound created by said penetrating member, said detection member configured to determine a concentration of an analyte in the fluid using a sample of less than 1 μL of the fluid.

62. A body fluid sampling system for use on a tissue site, the system comprising:

a drive force generator;

a plurality of penetrating members operatively coupled to said force generator, said force generator moving each of said members along a path out of a housing having a penetrating member exit, into said tissue site, stopping in said tissue site, and withdrawing out of said tissue site;

a flexible support member coupling said penetrating members to define a linear array, said support member being movable and configured to move each of said penetrating members to a launch position associated with said force generator;

a spool in contact with at least one portion of the flexible support member, said spool configured to hold unused portions of the support member in a roll configuration.

63. A body fluid sampling system for use on a tissue site, the system comprising:

an electrically powered drive force generator;

a penetrating member operatively coupled to said force generator, said force generator moving said member along a path out of a housing having a penetrating member exit, into said tissue site, stopping in said tissue site, and withdrawing out of said tissue site;

a cartridge housing said penetrating member, said cartridge having a first and a second seal coupled to said penetrating member to maintain a sterile environment around a portion of the penetration member prior to penetrating member actuation.

64. A body fluid sampling system for use on a tissue site, the system comprising:

an electrically powered drive force generator;

a penetrating member operatively coupled to said force generator, said force generator moving said member along a path out of a housing having a penetrating member exit, into said tissue site, stopping in said tissue site, and withdrawing out of said tissue site;

a cartridge housing said penetrating member, said cartridge having a first and a second seal coupled to said penetrating member to maintain a sterile environment around a portion of the penetration member prior to penetrating member actuation.

65. A body fluid sampling system for use on a tissue site, the system comprising:

a drive force generator;

a penetrating member operatively coupled to said force generator, said force generator moving said member along a path out of a housing having a penetrating member exit, into said tissue site, stopping in said tissue site, and withdrawing out of said tissue site;

said drive force generator configured to be controlled to follow a predetermined velocity trajectory into the tissue and out of said tissue;

a cartridge housing said penetrating member, said cartridge having a first and a second seal coupled to said penetrating member to maintain a sterile environment around a portion of the penetration member prior to penetrating member actuation.

66. A body fluid sampling system for use on a tissue site, the system comprising:

a drive force generator;

a penetrating member operatively coupled to said force generator, said force generator moving said member along a path out of a housing having a penetrating member exit, into said tissue site, stopping in said tissue site, and withdrawing out of said tissue site;

a position sensor positioned to provide an indication of a position of the penetrating member during actuation;

a cartridge housing said penetrating member, said cartridge having a first and a second seal coupled to said penetrating member to maintain a sterile environment around a portion of the penetration member prior to penetrating member actuation.

67. A body fluid sampling system for use on a tissue site, the system comprising:

a drive force generator;

a penetrating member operatively coupled to said force generator, said force generator moving said member along a path out of a housing having a penetrating member exit, into said tissue site, stopping in said tissue site, and withdrawing out of said tissue site;

wherein said penetrating member is an elongate member without a molded attachment;

a coupler on said force generator configured to engage at least a portion of said elongate portion of the penetrating member and drive said member along a path into a tissue site and withdrawn from a tissue site;

a cartridge housing said penetrating member, said cartridge having a first and a second seal coupled to said penetrating member to maintain a sterile environment around a portion of the penetration member prior to penetrating member actuation.

68. A body fluid sampling system for use on a tissue site, the system comprising:

a drive force generator;

a plurality of cartridges each containing a penetrating member, each of said cartridges coupled together to define a flexible array;

a transport device for moving each of said cartridges into a launch position operatively coupling said penetrating member to the force generator;

each cartridge having a first and a second seal coupled to said penetrating member to maintain a sterile environment around a portion of the penetration member prior to penetrating member actuation.

69. A body fluid sampling system for use on a tissue site, the system comprising:

a drive force generator;

a penetrating member having an elongate portion without a molded attachment and operatively coupled to said force generator;

a sterility enclosure covering at least a tip of said penetrating member, said sterility enclosure removed from said penetrating member prior to actuation of the member and positioned so that the penetrating member will not contact said enclosure during actuation.

70. A body fluid sampling system for use on a tissue site, the system comprising:

a drive force generator;

a penetrating member having an elongate portion without a molded attachment and operatively coupled to said force generator;

a sterility enclosure creating a sterile environment around at least a tip of said penetrating member, said penetrating member breaching said sterile environment during actuation.

71. A body fluid sampling system for use on a tissue site, the system comprising:

a drive force generator;

a penetrating member operatively coupled to said force generator, said force generator moving said member along a path out of a housing having said a penetrating member exit, into said tissue site, stopping in said tissue site, and withdrawing out of said tissue site;

a skin stabilizer device suitable for stretching a surface of a tissue site, said skin stabilizer at least partially surrounding the penetrating member exit;

a cartridge housing said penetrating member, said cartridge having a first and a second seal coupled to said penetrating member to maintain a sterile environment around a portion of the penetration member prior to penetrating member actuation.

72. A body fluid sampling system for use on a tissue site, the system comprising:

a drive force generator;;

a penetrating member operatively coupled to said force generator, said force generator moving said member along a path out of a housing having said a penetrating member exit, into said tissue site, stopping in said tissue site, and withdrawing out of said tissue site;

a user interface for transmitting at least one input between a user;

a cartridge housing said penetrating member, said cartridge having a first and a second seal coupled to said penetrating member to maintain a sterile environment around a portion of the penetration member prior to penetrating member actuation.

73. A body fluid sampling system for use on a tissue site, the system comprising:

a drive force generator;

a penetrating member operatively coupled to said force generator, said force generator moving said member along a path out of a housing having a penetrating member exit, into said tissue site, stopping in said tissue site, and withdrawing out of said tissue site;

an analyte detection member positioned to receive fluid from a wound created by said penetrating member, said detection member configured to determine a concentration of an analyte in the fluid using a sample of less than 1 μL of the fluid;

a cartridge housing said penetrating member, said cartridge having a first and a second seal coupled to said penetrating member to maintain a sterile environment around a portion of the penetration member prior to penetrating member actuation.

74. A tissue penetrating system, comprising:

a plurality of cartridges each with a distal port and a proximal port;

a plurality of penetrating members each coupled to a cartridge, each penetrating member having a sharpened distal tip and a shaft portion slidably disposed within the cartridge; and

a seal formed by a fracturable material between the penetrating member and the cartridge, the seal being positioned at least one of a distal port or a proximal port of the cartridge.

75. A tissue penetrating system, comprising:

a cartridge with a distal port and a proximal port;

a plurality of penetrating members each with a sharpened distal tip and a shaft portion slidably disposed within the cartridge; and

a seal formed by a fracturable material between the penetrating member and the cartridge, the seal being positioned at least one of a distal port or a proximal port of the cartridge.

76. A tissue penetrating system, comprising:

a cartridge with a distal port and a proximal port;

a sample chamber;

a plurality of penetrating members each with a sharpened distal tip and a shaft portion slidably disposed within the cartridge; and

a first seal formed at the distal port and a second seal formed at the proximal port, wherein prior to lancing the first seal and second seal maintain the distal tip of a penetrating member and the sample chamber in a sterile environment.

77. A tissue penetrating system, comprising:

a cartridge with a distal port and a proximal port;

a plurality of sample chambers;

a plurality of penetrating members each with a sharpened distal tip and a shaft portion slidably disposed within the cartridge, each penetrating member being associated with a sample chamber;

a first seal formed at the distal port and a second seal formed at the proximal port, wherein prior to lancing the first seal and second seal maintain the distal tip of a penetrating member and the sample chamber in a sterile environment.

78. A tissue penetrating system, comprising:

a cartridge with a distal port and a proximal port;

a plurality of sample chambers;

a plurality of penetrating members each with a sharpened distal tip and a shaft portion slidably disposed within the cartridge, each penetrating member being associated with a sample chamber; and

a first seal formed at the distal port and a second seal formed at the proximal port, wherein prior to lancing the first seal and second seal maintain the distal tip of a penetrating member and the sample chamber in a sterile environment.

79. A tissue penetrating system, comprising:

a cartridge having a distal port and a proximal port;

a plurality of penetrating members;

a plurality of lumens between the distal port and the proximal port for slidably receiving a penetrating member;

a sample chamber defined by the cartridge having an opening;

a first seal covering the distal port; and

a second seal covering the proximal port.

80. The system of claim 148, further comprising:

a plurality of sample chambers each associated with a penetrating member.

81. A tissue penetrating system, comprising:

a plurality of cartridges;

a penetrating member driver;

a plurality of penetrating members coupled to the penetrating member driver, each of a penetrating member associated with a cartridge;

a plurality of gas-tightly sealed enclosures coupled in an array, each of the enclosures fully containing at least one of the plurality of cartridges; the sealed enclosures configured to be advanceable on a transport device that individually releases the cartridges from the sacks and loads them individually onto the penetrating member driver.

82. The system of claim 149, wherein the plurality of cartridges is arranged as a bandolier.

83. The system of claim 149, wherein the array is a stack.

84. A tissue penetrating system, comprising:

a plurality of penetrating members each having a sharpened distal tip;

a penetrating member driver; and

a plurality of cartridges coupled in an array and each housing a penetrating member, each cartridge configured to permit the penetrating member driver to engage each of the penetrating members sequentially, each cartridge having a plurality of seals positioned to provide that the sharpened distal tip remains in a sterile environment before penetrating a target site, each penetrating being launched without breaking a seal.

85. The system of claim 84, wherein the plurality of cartridges is arranged as a bandolier.

86. The system of claim 84, wherein each of the cartridges has one of the seals located at a proximal port and another of the seals located at a distal port.

87. The system of claim 84, further comprising:

a belt for holding the cartridges in the array.

88. The system of claim 84, further comprising:

a tape for holding the cartridges in the array.

89. The system of claim 84, further comprising:

a support channel for holding the cartridges in the array.

90. The system of claim 84, further comprising a cog for holding the cartridges in the array.

91. A tissue penetrating system, comprising:

a plurality of cartridges each with a distal port and a proximal port;

a plurality of penetrating members each associated with a cartridge, each penetrating member having a sharpened distal tip and a shaft portion slidably disposed within the cartridge;

a seal formed by a fracturable material between the penetrating member and each cartridge, the seal being positioned at least one of a distal port or a proximal port of the cartridge; and

a cartridge transport device for moving each of the cartridges to a position that aligns the penetrating member with the penetrating member driver so that the penetrating member can be driven along a path into a target tissue.

92. A method of penetrating a tissue site, comprising:

providing a tissue penetrating system that includes a cartridge, a sample chamber, a penetrating member and at least one seal that maintains the penetrating member in a sterile condition prior to launch of the penetrating member;

fracturing at least a portion of the seal prior to launch of the penetrating member;

launching the penetrating member to a target tissue; and

receiving a body fluid in the sample chamber of the tissue penetrating system.

93. The method of claim 92, wherein no more than 1 μL of the body fluid is received in the sample chamber.

94. The method of claim 92, wherein no more than 0.5 μL of the body fluid is received in the sample chamber.

95. The method of claim 92, further comprising:

monitoring position and speed of the penetrating member as the penetrating member moves in the first direction toward the target tissue.

96. The method of claim 92, further comprising:

adjusting an application of force to the penetrating member to achieve a desired speed of the penetrating member.

97. The method of claim 92, further comprising:

adjusting an application of force to the penetrating member when the penetrating member contacts the skin surface so that the penetrating member penetrates the skin surface within a desired range of speed.

98. The method of claim 92, further comprising:

monitoring position and speed of the penetrating member as the penetrating member moves in a first direction toward the target tissue, wherein the application of a launching force to the penetrating member is controlled based on position and speed of the penetrating member.

99. The method of claim 166, further comprising:

controlling a withdraw force to the penetrating member so that the penetrating member moves in a second direction away from the target tissue.

100. A skin penetrating system, comprising:

a housing member;

a plurality of penetrating members positioned in the housing member,

a tissue stabilizing device coupled to the housing member; and

a user interface configured to relay at least one of, skin penetrating performance or a skin penetrating setting.

101. A tissue penetrating system, comprising:

a housing member;

a plurality of penetrating members positioned in the housing member,

a tissue stabilizing member coupled to the housing; and

a penetrating member sensor coupled to the plurality of penetrating members, the penetrating member sensor configured to provide information relative to a depth of penetration of a penetrating member through a skin surface.

102. The system of claim 1, wherein the tissue stabilizer member is configured to enhance fluid flow from a target tissue.

103. The system of claim 1, wherein the tissue stabilizer member creates a stretching of a skin surface.

104. The system of claim 1, wherein the tissue stabilizer member includes a plurality of protrusions.

105. The system of claim 1, wherein the tissue stabilizer member applies a vacuum to a target tissue.

106. The system of claim 1, wherein the tissue stabilizer member is configured to apply a force to a target tissue and cause the target tissue to press in an inward direction relative to the housing member.

107. The system of claim 1, wherein the tissue stabilizing device applies a stimulation to a target tissue.

108. A tissue penetrating system, comprising:

a housing member;

a plurality of penetrating members positioned in the housing member, and

a pressure applicator coupled to the housing member.

109. The system of claim 72, wherein the pressure applicator is configured to enhance fluid flow from a target tissue.

110. The system of claim 72, wherein the tissue stabilizer member creates a stretching of a skin surface.

111. The system of claim 72, wherein the pressure applicator includes a plurality of protrusions.

112. The system of claim 72, wherein the pressure applicator applies a vacuum to a target tissue.

113. The system of claim 72, wherein the pressure applicator is configured to apply a force to a target tissue and cause the target tissue to press in an inward direction relative to the housing member.

114. The system of claim 72, wherein the tissue stabilizing device applies a stimulation to a target tissue.

115. The system of claim 1, further comprising:

a plurality of cartridges integrated in a cassette.

116. A tissue penetrating system, comprising:

a housing member;

a plurality of penetrating members; and

a stimulating member coupled to the housing member and configured to increase blood circulation at a skin surface.

117. A tissue penetrating system, comprising:

a housing member;

a plurality of penetrating members; and

a stimulating vibratory member coupled to the housing member and configured to apply a vibratory motion to a skin surface.

118. A method of obtaining a sample of capillary whole blood from a target tissue, comprising

providing a penetrating system that includes a tissue stabilizing member;

applying skin stimulation to a skin surface site with the tissue stabilizing member;

introducing a penetrating member through the skin surface site to form an incision; and

collecting blood from the incision in the penetrating system.

119. The method of claim 145, wherein the skin stimulation is a vibratory motion applied to the skin surface.

120. The method of claim 145, wherein the skin stimulation increases blood circulation at the skin surface.

121. The method of claim 145, further comprising:

monitoring position and speed of a penetrating member as the penetrating member moves in the first direction toward the skin target.

122. The method of claim 145, further comprising:

adjusting an application of force to a penetrating member to achieve a desired speed of the penetrating member.

123. The method of claim 145, further comprising:

adjusting an application of force to a penetrating member when the penetrating member contacts a skin target so that the penetrating member penetrates the skin target within a desired range of speed.

124. The method of claim 145, further comprising:

monitoring position and speed of a penetrating member as the penetrating member moves in a first direction toward the skin target, wherein the application of a launching force to the penetrating member is controlled based on position and speed of the penetrating member.

125. The method of claim 145, further comprising:

controlling a withdraw force to the penetrating member so that the penetrating member moves in a second direction away from the skin target.

126. A tissue penetrating system comprising:

an electromechanical penetrating member driver;

a plurality of penetrating members each having a sharpened distal tip;

a plurality of cartridges each associated with a penetrating member and coupled to the penetrating member driver, each cartridge having a plurality of seals for maintaining the distal tip of the penetrating member in a sterile condition prior to launch; and

a tissue stabilizing member coupled to at least one of the cartridges.

127. A tissue penetrating system, comprising:

a penetrating member driver having penetrating member position feedback control;

a plurality of penetrating members each having a sharpened distal tip;

a plurality of cartridges each associated with a penetrating member and coupled to the penetrating member driver, each cartridge having a plurality of seals for maintaining the distal tip of the penetrating member in a sterile condition prior to lancing; and

a tissue stabilizing member coupled to at least one of the cartridges.

128. A tissue penetrating system, comprising:

a penetrating member driver having penetrating member position feedback control;

a plurality of penetrating members each having a sharpened distal tip;

a plurality of cartridges, each associated with a penetrating member and coupled to the penetrating member driver, each cartridge having a plurality of seals for maintaining the distal tip of the penetrating member in a sterile condition prior to lancing;

a cartridge transport device for moving each of the cartridges to a position aligning the penetrating member with the penetrating member driver so that the penetrating member may be driven along a path into the tissue site; and

a tissue stabilizing member coupled to at least one of the cartridges.

129. A tissue penetrating system, comprising:

a plurality of penetrating members each with a tip;

a penetrating member driver coupled to the plurality of penetrating members; each tip of a penetrating member being uncovered during launch of the penetrating member by the penetrating member driver; and

a support with a plurality of openings, each of an opening receiving a penetrating member.

130. A tissue penetrating system, comprising:

a plurality of penetrating members each with a tip;

a penetrating member driver coupled to the plurality of penetrating members;

a support with a plurality of openings, each opening receiving a penetrating member, each tip of a penetrating member being uncovered during launch of a penetrating member by the penetrating driver member; and

a penetrating member sensor coupled to the plurality of penetrating members, the penetrating member sensor configured to provide information relative to a depth of penetration of a penetrating member through a skin surface.

131. A tissue penetration device, comprising:

a penetrating member driver;

a cartridge;

a plurality of penetrating members integrated with the cartridge, each of a penetrating member coupled to the penetrating member driver when advanced along a path into a tissue target; and

a support with a plurality of openings, each opening receiving a penetrating member, each tip of a penetrating member being uncovered during launch of a penetrating member by the penetrating driver member.

132. A tissue penetrating system, comprising:

a plurality of penetrating members each having at least a penetrating member tip in its own sterile enclosure;

a penetrating member driver; and

a penetrating member transport for transporting a penetrating member from a storage area to the penetrating member driver.

133. The system of claim 143, wherein the storage area is a plurality of cartridges.

134. The system of claim 144, wherein each penetrating member is associated with a cartridge.

135. A tissue penetrating system, comprising:

a plurality of penetrating members, each penetrating member having a penetrating member tip in its own sterile enclosure

a penetrating member driver; and

a penetrating member transport for transporting penetrating members from a storage area to the penetrating member driver.

136. The system of claim 146, further comprising:

a penetrating member sensor coupled to the plurality of penetrating members, the penetrating member sensor configured to provide information relative to a depth of penetration of a penetrating member through a skin surface.

137. A tissue penetrating system , comprising:

a plurality of penetrating members each having at least a penetrating member tip in a sterile enclosure;

a support with a plurality of openings, each opening receiving a penetrating member; and

a penetrating member driver with a non-spring actuator for drawing a penetrating member in a direction back towards the penetrating member driver.

138. A tissue penetrating system, comprising:

a plurality of penetrating members;

a flexible tape coupling the plurality of penetrating members into a flexible array;

a penetrating member driver coupled to the plurality of penetrating members configured to drive and withdraw a penetrating member into and out of a target tissue; and

a transport device for sequentially coupling each of a penetrating member to the penetrating member driver.

139. A tissue penetrating system, comprising:

a plurality of penetrating members;

a flexible tape coupling the plurality of penetrating members into a flexible linear array, and

a penetrating member loading device for sequentially coupling each penetrating member to a penetrating member driver for driving a penetrating member into a target tissue, the transport device removing an amount of the flexible tape sufficient so that a tip of a penetrating member does not pierce the flexible tape during actuation by the penetrating member driver.

140. A tissue penetrating system, comprising:

a plurality of penetrating members interconnected as a flexible linear array;

a plurality of sterility caps each on one a penetrating member;

a penetrating member driver; and

a penetrating member loading device configured to sequentially coupling each of a penetrating member to the penetrating member driver for driving a penetrating member into a target tissue, the penetrating member loading device removing the sterility cap prior to lancing so that a tip of a penetrating member does not pierce the cape during actuation by the penetrating member driver.

141. A tissue penetrating system, comprising:

a plurality of penetrating members interconnected to define a flexible linear array;

a storage device for penetrating members prior to launching, the storage device including a spool around which the flexible linear array is concentrically wound;

a penetrating member driver; and

a penetrating member loading device for sequentially coupling each penetrating member to the penetrating member driver for driving a penetrating member into a target tissue.

142. A skin penetrating system, comprising:

a housing member;

a plurality of penetrating members positioned in the housing member, and

a plurality of analyte detecting members each associated with a penetrating member, each analyte detecting member including a sample chamber and an opening for transport of a body fluid into the sample chamber, the analyte detecting member being configured to determine a concentration of an analyte in a body fluid using a sample of less than 1 μL of a body fluid disposed in the sample chamber; and

a user interface configured to relay at least one of, skin penetrating performance or a skin penetrating setting.

143. A tissue penetrating system, comprising:

a penetrating member driver;

a cartridge with a distal port and a proximal port and coupled to the penetrating member driver;

an analyte detecting member coupled to a sample chamber, the analyte detecting member being configured to determine a concentration of an analyte in a body fluid using a sample of less than 1 μL of a body fluid disposed in the sample chamber;

a penetrating member with a sharpened distal tip and shaft portion that is slidably disposed within the cartridge, wherein a tip of the penetrating member is configured to extend through the opening of the sample chamber; and

a human interface providing at least one output.

144. A skin penetrating system, comprising:

a housing member;

a penetrating member positioned in the housing member, and

an analyte detecting member coupled to a sample chamber, the analyte detecting member being configured to determine a concentration of an analyte in a body fluid using a sample of less than 1 μL of a body fluid disposed in the sample chamber, wherein a tip of the penetrating member is configured to extend through an opening of the sample chamber.

145. The system of claim 1, wherein the analyte detecting member is configured to determine a concentration of an analyte in a body fluid using a sample of less than 0.5 μL of a body fluid disposed in the sample chamber.

146. A skin penetrating system, comprising:

a housing member;

a plurality of penetrating members positioned in the housing member, and

a plurality of analyte detecting members each associated with a penetrating member and a sample chamber, the analyte detecting member being configured to determine a concentration of an analyte in a body fluid using a sample of less than 1 μL of a body fluid disposed in the sample chamber, wherein a tip of the penetrating member is configured to extend through an opening of a sample chamber.

147. The system of claim 146, further comprising:

a penetrating member sensor coupled to the plurality of penetrating members, the penetrating member sensor configured to provide information relative to a depth of penetration of a penetrating member through a skin surface.

148. A tissue penetrating system, comprising:

a penetrating member driver;

a cartridge with a distal port and a proximal port and coupled to the penetrating member driver;

an analyte detecting member coupled to a sample chamber, the analyte detecting member being configured to determine a concentration of an analyte in a body fluid using a sample of less than 1 μL of a body fluid disposed in the sample chamber;

a penetrating member with a sharpened distal tip and shaft portion that is slidably disposed within the cartridge, wherein a tip of the penetrating member is configured to extend through the opening of the analyte detecting member; and

a first seal formed at the distal port and a second seal formed at the proximal port, wherein the first seal and second seal maintain the distal tip of the penetrating member and the sample chamber in a sterile environment prior to launch of the penetrating member.

149. The system of claim 148, wherein each analyte detecting member is configured to determine a concentration of an analyte in a body fluid using a sample that does not exceed a volume of 0.75 μL of a body fluid disposed in the sample chamber.

150. The system of claim 148, wherein each analyte detecting member is configured to determine a concentration of an analyte in a body fluid using a sample that does not exceed a volume of 0.5 μL of a body fluid disposed in the sample chamber.

151. The system of claim 148, wherein each analyte detecting member is configured to determine a concentration of an analyte in a body fluid using a sample that does not exceed a volume of 0.25 μL of a body fluid disposed in the sample chamber.

152. The system of claim 148, wherein each analyte detecting member is configured to determine a concentration of an analyte in a body fluid using a sample that does not exceed a volume of 0.1 μL of a body fluid disposed in the sample chamber.

153. The system of claim 148, further comprising:

a penetrating member sensor coupled to penetrating member, the penetrating member sensor configured to provide information relative to a depth of penetration of a penetrating member through a skin surface.

154. A tissue penetrating system, comprising:

a cartridge with a distal port and a proximal port, each cartridge including an analyte detecting member coupled to a sample chamber, the analyte detecting member being

configured to determine a concentration of an analyte in a body fluid using a sample of less than 1 μL of a body fluid disposed in the sample chamber;

a penetrating member with a sharpened distal tip and shaft portion that is slidably disposed within the cartridge;

a first seal covering the distal port; and

a second seal covering the proximal port

155. The system of claim 156, wherein each analyte detecting member is configured to determine a concentration of an analyte in a body fluid using a sample that does not exceed a volume of 0.75 μL of a body fluid disposed in the sample chamber.

156. The system of claim 156, wherein each analyte detecting member is configured to determine a concentration of an analyte in a body fluid using a sample that does not exceed a volume of 0.5 μL of a body fluid disposed in the sample chamber.

157. The system of claim 156, wherein each analyte detecting member is configured to determine a concentration of an analyte in a body fluid using a sample that does not exceed a volume of 0.25 μL of a body fluid disposed in the sample chamber.

158. The system of claim 156, wherein each analyte detecting member is configured to determine a concentration of an analyte in a body fluid using a sample that does not exceed a volume of 0.1 μL of a body fluid disposed in the sample chamber.

159. The system of claim 156, further comprising:

a penetrating member sensor coupled to penetrating member, the penetrating member sensor configured to provide information relative to a depth of penetration of a penetrating member through a skin surface.

160. The system of claim 156, further comprising:

a user interface configured to relay at least one of, skin penetrating performance or a skin penetrating setting.

161. The system of claim 156, further comprising:

a human interface providing at least one output.

162. A tissue penetrating system, comprising:

a plurality of penetrating members each having a sharpened distal tip;

a penetrating member driver coupled to the plurality of penetrating members; and

a plurality of cartridges each housing a penetrating member and configured so that the penetrating member driver engages each of the penetrating members sequentially, each

cartridge including an analyte detecting member coupled to a sample chamber, the analyte detecting member being configured to determine a concentration of an analyte in a body fluid using a sample of less than 1 μL of a body fluid disposed in the sample chamber.

163. The system of claim 164, wherein each analyte detecting member is configured to determine a concentration of an analyte in a body fluid using a sample that does not exceed a volume of 0.75 μL of a body fluid disposed in the sample chamber.

164. The system of claim 164, wherein each analyte detecting member is configured to determine a concentration of an analyte in a body fluid using a sample that does not exceed a volume of 0.5 μL of a body fluid disposed in the sample chamber.

165. The system of claim 164, wherein each analyte detecting member is configured to determine a concentration of an analyte in a body fluid using a sample that does not exceed a volume of 0.25 μL of a body fluid disposed in the sample chamber.

166. The system of claim 164, wherein each analyte detecting member is configured to determine a concentration of an analyte in a body fluid using a sample that does not exceed a volume of 0.1 μL of a body fluid disposed in the sample chamber.

167. The system of claim 164, wherein each cartridge has a plurality of seals positioned so that the sharpened distal tip remains in a sterile environment before launch of a penetrating member, the plurality of modules coupled together in an array.

168. The system of claim 164, further comprising:

a penetrating member sensor coupled to the plurality of penetrating members, the penetrating member sensor configured to provide information relative to a depth of penetration of a penetrating member through a skin surface.

169. A tissue penetrating system, comprising:

a plurality of cartridges, each cartridge including an analyte detecting member coupled to a sample chamber, the analyte detecting member being configured to determine a concentration of an analyte in a body fluid using a sample of less than 1 μL of a body fluid disposed in the sample chamber; and

each of the cartridges having a plurality of seals positioned so that the sample chamber remains in a sterile environment before launch of a penetrating member, the plurality of modules coupled together in an array.

170. The system of claim 173, wherein each analyte detecting member is configured to determine a concentration of an analyte in a body fluid using a sample that does not exceed a volume of 0.75 μL of a body fluid disposed in the sample chamber.

171. The system of claim 173, wherein each analyte detecting member is configured to determine a concentration of an analyte in a body fluid using a sample that does not exceed a volume of 0.5 μL of a body fluid disposed in the sample chamber.

172. The system of claim 173, wherein each analyte detecting member is configured to determine a concentration of an analyte in a body fluid using a sample that does not exceed a volume of 0.25 μL of a body fluid disposed in the sample chamber.

173. The system of claim 173, wherein each analyte detecting member is configured to determine a concentration of an analyte in a body fluid using a sample that does not exceed a volume of 0.1 μL of a body fluid disposed in the sample chamber.

174. The system of claim 167, further comprising:

a plurality of penetrating members each coupled to a cartridge.

175. The system of claim 171, further comprising:

a penetrating member sensor coupled to penetrating member, the penetrating member sensor configured to provide information relative to a depth of penetration of a penetrating member through a skin surface.

176. A method of penetrating a target tissue, comprising:

providing a tissue penetrating system with a penetrating member and an analyte detecting member coupled to a sample chamber,;

advancing a penetrating member through the target tissue;

withdrawing the penetrating member from the target tissue.

receiving no more than 1 μL of a body fluid in the sample chamber.

177. The method of claim 182, wherein no more than 0.5 μL of the body fluid is received in the sample chamber.

178. The method of claim 182, further comprising:

monitoring position and speed of the penetrating member as the penetrating member moves in the first direction toward the target tissue.

179. The method of claim 182, further comprising:

adjusting an application of force to the penetrating member to achieve a desired speed of the penetrating member.

180. The method of claim 182, further comprising:

adjusting an application of force to the penetrating member when the penetrating member contacts the skin surface so that the penetrating member penetrates the skin surface within a desired range of speed.

181. The method of claim 182, further comprising:

monitoring position and speed of the penetrating member as the penetrating member moves in a first direction toward the target tissue, wherein the application of a launching force to the penetrating member is controlled based on position and speed of the penetrating member.

182. The method of claim 187, further comprising:

controlling a withdraw force to the penetrating member so that the penetrating member moves in a second direction away from the target tissue.

183. A skin penetrating system, comprising:

a housing member;

a penetrating members positioned in the housing member, and

a tissue stabilizing device coupled to the housing member.

184. A skin penetrating system, comprising:

a housing member;

a penetrating member positioned in the housing member, and

a tissue pressure applicator coupled to the housing member.

185. A skin penetrating system, comprising:

a housing member;

a penetrating member positioned in the housing member, and

an analyte detecting member coupled to a sample chamber, the analyte detecting member being configured to determine a concentration of an analyte in a body fluid using a sample of less than 1 μL of a body fluid disposed in the sample chamber.

186. A tissue penetrating system, comprising:

a housing

a penetrating member positioned in the housing;

a seal coupled to the penetrating member to maintain the penetrating member in a sterile environment.

187. A tissue penetration device, comprising:

a penetrating member driver;

a cartridge;

a plurality of penetrating members integrated with the cartridge, each of penetrating member coupled to the penetrating member driver when advanced along a path into a tissue target; and

a penetrating member sensor coupled to the plurality of penetrating members, the penetrating member sensor configured to provide information relative to a depth of penetration of a penetrating member through a skin surface.

188. The system of claims 1-193, the system further comprising:

an electrically powered drive force generator;

a user interface configured to relay at least one of, penetrating member performance or a penetrating member setting.

189. The system of claims 1-193, the system further comprising:

a human interface providing at least one output.

190. A system as in claim , further comprising a penetrating member sensor positioned to monitor a penetrating member coupled to said force generator, the penetrating member sensor configured to provide information relative to a depth of penetration of a penetrating member through a skin surface.

191. The system of claims 1-193, wherein the depth of penetration is about 100 to 2500 microns.

192. The system of claims 1-193, wherein the depth of penetration is 500 to 750 microns.

193. The system of claims 1-193, wherein the depth of penetration is no more than about 1000 microns beyond a stratum corneum thickness of a skin surface.

194. The system of claims 1-193, wherein the depth of penetration is no more than about 500 microns beyond a stratum corneum thickness of a skin surface.

195. The system of claims 1-193, wherein the depth of penetration is no more than about 300 microns beyond a stratum corneum thickness of a skin surface.

196. The system of claims 1-193, wherein the depth of3 penetration is less than a sum of a stratum corneum thickness of a skin surface and 400 microns..

197. The system of claims 1-193, wherein the penetrating member sensor is further configured to provide an indication of velocity of a penetrating member.

198. The system of claims 1-193, wherein the active penetrating member moves along a substantially linear path into the tissue.

199. The system of claims 1-193, wherein the active penetrating member moves along an at least partially curved path into the tissue.

200. The system of claims 1-193, wherein the driver is a voice coil drive force generator.

201. The system of claims 1-193, wherein the driver is a rotary voice coil drive force generator.

202. The system of claims 1-193, wherein the penetrating member sensor is coupled to a processor with control instructions for the penetrating member driver.

203. The system of claims 1-193, wherein the processor includes a memory for storage and retrieval of a set of penetrating member profiles utilized with the penetrating member driver.

204. The system of claims 1-193, wherein the proce ssor is utilized to monitor position and speed of a penetrating member as the penetrating member moves in a first direction.

205. The system of claims 1-193, wherein the processor is utilized to adjust an application of force to a penetrating member to achieve a desired speed of the penetrating member.

206. The system of claims 1-193, wherein the processor is utilized to adjust an application of force to a penetrating member when the penetrating member contacts a target tissue so that the penetrating member penetrates the target tissue so that the penetrating member penetrates the target tissue within a desired range of speed.

207. The system of claims 1-193, wherein the processor is utilized to monitor position and speed of a penetrating member as the penetrating member moves in the first direction toward a target tissue, wherein the application of a launching force to the penetrating member is controlled based on position and speed of the penetrating member.

208. The system of claims 1-193, wherein the processor is utilized to control a withdraw force to the penetrating member so that the penetrating member moves in a second direction away from the target tissue.

209. The system of claims 1-193, wherein in the first direction the penetrating member moves toward the target tissue at a speed that is different than a speed at which the penetrating member moves away from the target tissue.

210. The system of claims 1-193, wherein in the first direction the penetrating member moves toward the target tissue at a speed that is greater than a speed at which the penetrating member moves away from the target tissue.

211. The system of claims 1-193, wherein a speed of a penetrating member in the first direction is the range of about 2.0 to 10.0 m/sec.

212. The system of claims 1-193, wherein a speed of a penetrating member in the first direction is the range of 0.05 to 60 m/sec.

213. The system of claims 1-193, wherein a speed of a penetrating member in the first direction is the range of 0.1 to 20.0 m/sec.

214. The system of claims 1-193, wherein a speed of a penetrating member in the first direction is the range of 1.0 to 10.0 m/sec.

215. The system of claims 1-193, wherein a speed of a penetrating member in the first direction is the range of 3.0 to 8.0 m/sec.

216. The system of claims 1-193, wherein a dwell time of the penetrating member in the target tissue below a skin surface is in the range of 1 microsecond to 2 seconds.

217. The system of claims 1-193, wherein a dwell time of the penetrating member in the target tissue below a skin surface is in the range of 500 milliseconds to 1.5 second.

218. The system of claims 1-193, wherein a dwell time of the penetrating member in the target tissue below a skin surface is in the range of 100 milliseconds to 1 second.

219. The system of claims 1-193, wherein the average velocity of the penetrating member during a tissue penetration stroke in the first direction is about 100 to about 1000 times greater than the average velocity of the penetrating member during a withdrawal stroke in a second direction.

220. The system of claims 1-193, further comprising a cartridge having one of said penetrating members..

221. The system of claims 1-193, further comprising:

a plurality of cartridges integrated in a cassette, each of said cartridges having one of said penetrating members.

222. The system of claims 1-193, wherein each cartridge has an exit port, and upon launch each penetrating member exists from the exit port.

223. The system of claims 1-193, wherein each cartridge has an exit port, and upon launch each penetrating member exists from the exit port.

224. The system of claims 1-193, wherein unused cartridges are stored in a linear stack.

225. The system of claims 1-193, further comprising a flexible support member coupling said cartridges together to define an array.

226. The system of claims 1-193, further comprising:

a plurality of connectors between said cartridges for holding said cartridges in an array configuration.

227. The system of claims 1-193, wherein each of said cartridges has one of said analyte detecting members.

228. The system of claims 1-193, wherein:

each of said cartridges has one of said analyte detecting members;

each of said cartridges defines a lumen at least partially housing one of said penetrating members;

wherein each of said analyte detecting members are positioned to receive body fluid entering the lumen from a wound on the tissue site created by the penetrating member.

229. The system of claims 1-193, wherein:

each of said cartridges has one of said analyte detecting members;

wherein each of said penetrating members moves outward from an exit port on said cartridges to penetrate tissue;

wherein each of said analyte detecting members are positioned to receive body fluid entering the exit port from a wound on the tissue site created by the penetrating member.

230. The system of claims 1-193, wherein the penetrating member sensor includes a capacitive incremental encoder.

231. The system of claims 1-193, wherein the penetrating member sensor includes an incremental encoder.

232. The system of claims 1-193, wherein the penetrating member sensor includes an optical encoder.

233. The system of claims 1-193, wherein the penetrating member sensor includes an interference encoder.

234. The system of claim further comprising an analyte detecting member.

235. The system of claim further comprising a plurality of analyte detecting members positioned to receive body fluid.

236. The system of claims 1-193, further comprising:

a sample chamber with an opening for transport of a body fluid into the sample chamber, the sample chamber being sized to receive no more than 1.0 μL of the body fluid.

237. The system of claims 1-193, further comprising:

a sample chamber with an opening for transport of a body fluid into the sample chamber, the sample chamber being sized to receive no more than 0.75 μL of the body fluid.

238. The system of claims 1-193, further comprising:

a sample chamber with an opening for transport of a body fluid into the sample chamber, the sample chamber being sized to receive no more than 0.5 μL of the body fluid.

239. The system of claims 1-193, further comprising:

a sample chamber with an opening for transport of a body fluid into the sample chamber, the sample chamber being sized to receive no more than 0.25 μL of the body fluid.

240. The system of claims 1-193, further comprising:

a sample chamber with an opening for transport of a body fluid into the sample chamber, the sample chamber being sized to receive no more than 0.1 μL of the body fluid.

241. The system of claims 1-193, further comprising:

an analyte detecting member coupled to a sample chamber, the analyte detecting member being configured to determine a concentration of an analyte in a body fluid using a sample that does not exceed a volume of 1 μL of a body fluid disposed in the sample chamber.

242. The system of claims 1-193, further comprising:

an analyte detecting member coupled to a sample chamber, the analyte detecting member being configured to determine a concentration of an analyte in a body fluid using a sample that does not exceed a volume of 0.75 μL of a body fluid disposed in the sample chamber.

243. The system of claims 1-193, further comprising:

an analyte detecting member coupled to a sample chamber, the analyte detecting member being configured to determine a concentration of an analyte in a body fluid using a sample that does not exceed a volume of 0.5 μL of a body fluid disposed in the sample chamber.

244. The system of claims 1-193, further comprising:

an analyte detecting member coupled to a sample chamber, the analyte detecting member being configured to determine a concentration of an analyte in a body fluid using a

sample that does not exceed a volume of 0.25 μL of a body fluid disposed in the sample chamber.

245. The system of claims 1-193, further comprising:

an analyte detecting member coupled to a sample chamber, the analyte detecting member being configured to determine a concentration of an analyte in a body fluid using a sample that does not exceed a volume of 0.1 μL of a body fluid disposed in the sample chamber.

246. The system of claims 1-193, wherein each of a penetrating of the plurality of penetrating members has a packing density of no more than 1.0 cm3/penetrating member.

247. The system of claims 1-193, wherein each of a penetrating member of the plurality of penetrating members has a packing density of no more than 0.75 cm3/penetrating member.

248. The system of claims 1-193, wherein the each of a penetrating member of the plurality of penetrating members has a packing density of no more than 0.5 cm3/penetrating member.

249. The system of claims 1-193, wherein each of a penetrating member of the plurality of penetrating members has a packing density of no more than 0.25 cm3/penetrating member.

250. The system of claims 1-193, wherein each of a penetrating member of the plurality of penetrating members has a packing density of no more than 0.1 cm3/penetrating member.

251. The system of claims 1-193, wherein each of a penetrating member and an associated sample chamber have a combined packing density of no more than 1.0 cm3.

252. The system of claims 1-193, wherein each of a penetrating member and an associated sample chamber have a combined packing density of no more than 0.75 cm3.

253. The system of claims 1-193, wherein each of a penetrating member and an associated sample chamber have a combined packing density of no more than 0.5 cm3.

254. The system of claims 1-193, wherein each of a penetrating member and an associated sample chamber have a combined packing density of no more than 0.25 cm3.

255. The system of claims 1-193, wherein each of a penetrating member and an associated sample chamber have a combined packing density of no more than 0.1 cm3.

256. The system of claims 1-193, further comprising:

a tissue stabilizer device coupled to the housing.

257. The system of claims 1-193, wherein the tissue stabilizer device is configured to enhance fluid flow from a target tissue.

258. The system of claims 1-193, wherein the tissue stabilizer device creates a stretching of a skin surface.

259. The system of claims 1-193, wherein the tissue stabilizer device includes a plurality of protrusions.

260. The system of claims 1-193, wherein the tissue stabilizer device applies a vacuum to a target tissue.

261. The system of claims 1-193, wherein the tissue stabilizer device is configured to apply a force to a target tissue and cause the target tissue to press in an inward direction relative to the housing member.

262. The system of claims 1-193, wherein the tissue stabilizing member applies a stimulation to a target tissue.

263. The system of claims 1-193, further comprising:

a seal formed by a fracturable material between the penetrating member and the cartridge, the seal being positioned at least one of a distal port or a proximal port of the cartridge.

264. The system of claims 1-193, further comprising

a second fracturable seal located at least one of the distal port or proximal port of cartridge.

265. The system of claims 1-193, further comprising

at least three fracturable seal between the penetrating member and the cartridge.

266. The system of claims 1-193, further comprising a vacuum source to provide a low pressure environment to draw fluid from a wound created by the penetrating member in the tissue.

267. The system of claims 1-193, wherein each penetrating member each penetrating members is an elongate member without molded attachments.

268. The system of claims 1-193, wherein each penetrating member each penetrating members comprises a microneedle having a lumen therein.

269. The system of claim further comprising a resilient member coupled to said penetrating member, said drive force generator aligned to move said resilient member which in turn moves the penetrating member.

270. The system of claims 1-193, further comprising:

a penetrating member transport device for moving each of a penetrating member into a position aligned with the penetrating member driver.

271. The system of claims 1-193, further comprising,

a belt for holding the penetrating members in an array configuration.

272. The system of claims 1-193, further comprising:

a tape device configured to hold the penetrating members in an array configuration.

273. The system of claims 1-193, further comprising:

a support channel configured to hold the penetrating members in an array configuration.

274. The system of claims 1-193, further comprising:

a cog configured to hold the penetrating members in an array configuration.

275. The system of claims 1-193, further comprising:

a plurality of connectors between penetrating members for holding the penetrating members in an array configuration.

276. The system of claim wherein the penetrating member exit is configured to be positioned against the tissue when the penetrating member contacts the tissue.

277. The system of claims 1-193, further comprising:

a support structure for receiving the penetrating members.

278. The system of claims 1-193, wherein the support structure is a bandolier.

279. The system of claims 1-193, wherein the support structure is a drum.

280. The system of claims 1-193 further comprising a user interface configured to relay at least one of, penetrating member performance or a penetrating member setting.

281. The system of claim 280, wherein the user interface is configured to provide a user with at least one input selected from, depth of a penetrating member penetration, velocity of a penetrating member, a desired velocity profile, a velocity of a penetrating member into the target tissue, velocity of the penetrating member out of the target tissue, dwell time of the penetrating member in the target tissue, and a target tissue relaxation parameter.

282. The system of claim 280, wherein the user interface provides t least one output to the user selected from, number of penetrating members available, number of penetrating members used, actual depth of penetrating member penetration on a target tissue , stratum corneum thickness, force delivered on a target tissue , energy used by a penetrating member driver to drive a penetrating member into the target tissue, dwell time of the penetrating member, battery status, system status, consumed energy, speed profile of a penetrating member, information relative to contact of a penetrating member with target tissue before penetration by the penetrating member, and information relative to a change of speed of a penetrating member as in travels in the target tissue.

283. The system of claim 280, further comprising:

a data interface configured to couple the tissue penetrating system to at least one of, support equipment with a data interface and the internet.

284. The system of claim 280, wherein the support equipment is selected from at least one of, a base station, home computer, central server, and main processing equipment for storing glucose level information.

285. The system of claim 284, wherein the data interface is selected from at least one of, Serial RS-232, modem interface, USB, HPNA, Ethernet, optical interface, IRDA,

RF interface, Bluetooth interface, cellular telephone interface, 2 way pager interface, parallel port interface standard, near field magnetic coupling, RF transceiver and a telephone systems.

286. The system of claim 280, wherein the user interface includes a real time clock and one or more alarms to provide a user with a reminder of a next target penetrating event is needed.

287. The system of claim 280, further comprising:

a processor coupled to the penetrating member driver and configured to receive signals from the user interface.

288. The system of claim 287, wherein the processor is configured to assist in an adjustment of force applied to the penetrating member driver in response to a target tissue parameter.

289. The system of claim 280, further comprising:

a user interface processor coupled to the user interface.

290. The system of claim 280, further comprising:

a memory for storing a target tissue parameter.

291. The system of claim 280, further comprising:

a memory for storing data on target tissue penetrating performance.

292. The system of claim 280, further comprising:

a memory for storing at least one of, a number of penetrating members used, number of target tissue penetrating events, time and date of the last selected number of target tissue penetrating events, time interval between alarm and target tissue penetrating event, stratum corneum thickness, time of day, energy consumed by a penetrating member driver to drive a penetrating member into the target tissue, depth of penetrating member penetration, velocity of the penetrating member, a desired velocity profile, velocity of the penetrating member into the target tissue, velocity of the penetrating member out of the target tissue, dwell time of the penetrating member in the target tissue, a target tissue relaxation parameter, force delivered on the target tissue, dwell time of the penetrating member, battery status, system status, consumed energy, speed profile of the penetrating member as the penetrating penetrates and advances through the target tissue, a tissue target tissue relaxation parameter, information relative to contact of a penetrating member with target tissue before penetration by the penetrating member, information relative to a change of speed of a penetrating member as in travels in the target tissue, information relative to consumed sensors and information relative to consumed penetrating members.

293. The system of claim 280, the user interface responds to audio commands.

294. The system of claim 280, wherein the user interface includes a sensor for detecting audio commands.

295. The system of claim 280, wherein the user interface relays information to a user via an audio device.

296. The system of claim 280, wherein the user interface relays information to a user via a wireless device.

297. The system of claims 1-193, the system further comprising:

a human interface providing at least one output.

298. The system of claim 297, further comprising:

a processor coupled to the penetrating member driver and configured to change a direction and magnitude of force exerted on a penetrating member as it penetrates or advances through the target tissue.

299. The system of claim 297, further comprising:

a penetrating member sensor configured to detect a penetrating member position during target tissue penetration.

300. The system of claim 297, wherein the at least one output is selected from, a penetration event of a penetrating member, number of penetrating members remaining, time of day, alarm, penetrating member trajectory waveform profile information, force for last penetration event, the last penetration event, how or low battery status, analyte status, time to change cassette status, jamming malfunction, and system status.

301. The system of claim 297, wherein the human interface is selected from an LED, an LED digital display, an LCD display, a sound generator, a buzzer, and a vibrating device.

302. The system of claim 297, wherein the housing is selected from at least one of, a telephone, a watch, a PDA, electronic device, medical device, point of care device and a decentralized diagnostic device.

303. The system of claim 297, further comprising:

an input device coupled to the housing, the input device selected from one or more pushbuttons, a touch pad independent of the display device, or a touch sensitive screen on a visual display.

304. The system of claim 297, further comprising:

a data exchange device for coupling the tissue penetrating system to support equipment.

305. The system of claim 304, further comprising:

a data interface configured to couple the tissue penetrating system to support equipment with a data interface.

306. The system of claim 297, further comprising:

a data exchange device for coupling the tissue penetrating system to support equipment selected from one of the following: personal computer, modem, PDA and a computer network.

307. The system of claim 297, wherein the human interface includes a real time clock and one or more alarms a user can set for reminders of when a next target tissue penetration event is needed.

308. The system of claim 297, wherein the human interface is coupled to receive signals from a human interface processor separate from a processor coupled to the penetrating member driver.

309. The system of claim 297, wherein the human interface processor has a sleep mode and runs intermittently to conserve power.

310. The system of claim 297, further comprising:

a memory for storing at least one of, a number of penetrating members used, number of target tissue penetrating events, time and date of the last selected number of target tissue penetrating events, time interval between alarm and target tissue penetrating event, stratum corneum thickness, time of day, energy consumed by a penetrating member driver to drive a penetrating member into the target tissue, depth of penetrating member penetration, velocity of the penetrating member, a desired velocity profile, velocity of the penetrating member into the target tissue, velocity of the penetrating member out of the target tissue, dwell time of the penetrating member in the target tissue, a target tissue relaxation parameter, force delivered on the target tissue, dwell time of the penetrating member, battery status, system status, consumed energy, speed profile of the penetrating member as the penetrating penetrates and advances through the target tissue, a tissue target tissue relaxation parameter, information relative to contact of a penetrating member with target tissue before penetration by the penetrating member, information relative to a change of speed of a penetrating member as in travels in the target tissue, information relative to consumed sensors and information relative to consumed penetrating members.

311. The system of claim 310, wherein the human interface processor has logic that provides an alarm time set for a first subset of days and a second alarm time set for a second subset of days.

312. The system of claim 311, wherein the first subset of days is Monday thru Friday and the second subset of days is Saturday and Sunday.

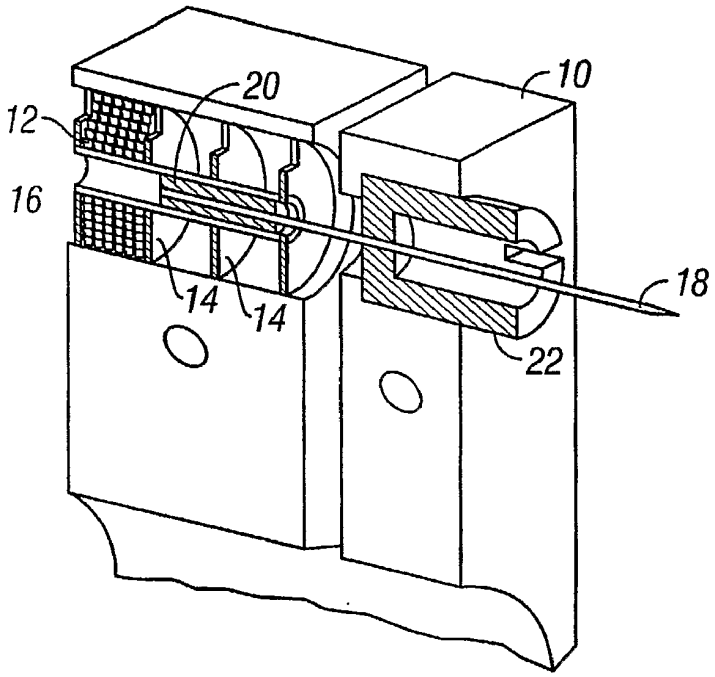


FIG. 1

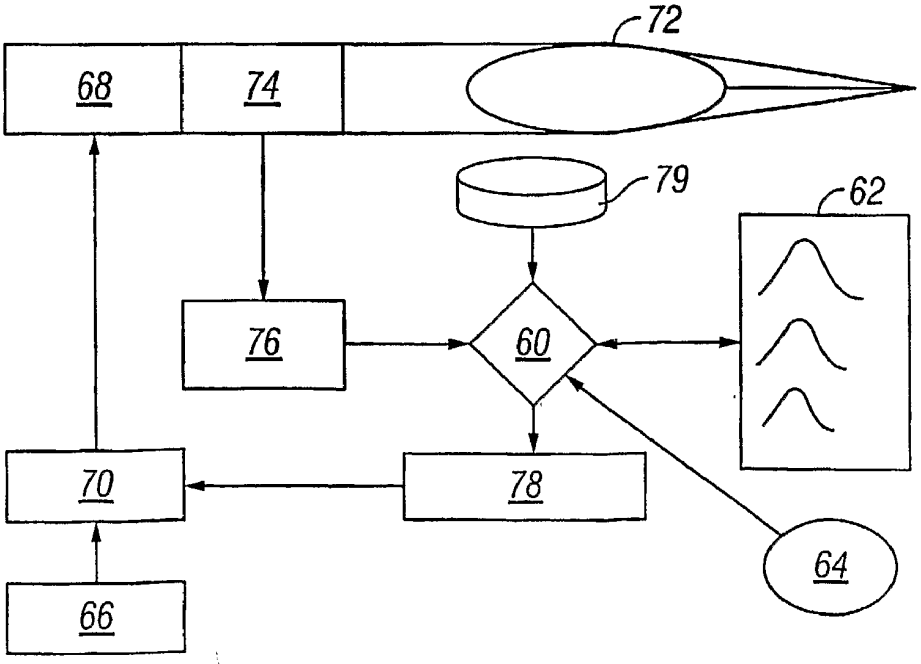


FIG. 3

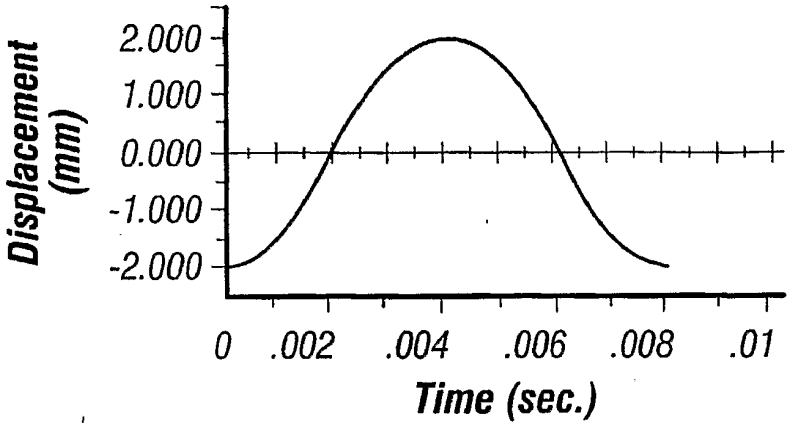
Displacement (mm)
2.000
1.000
0.000
-1.000
-2.000
0
.002
.004
.006
.008
.01
Time (sec.)

FIG. 2A

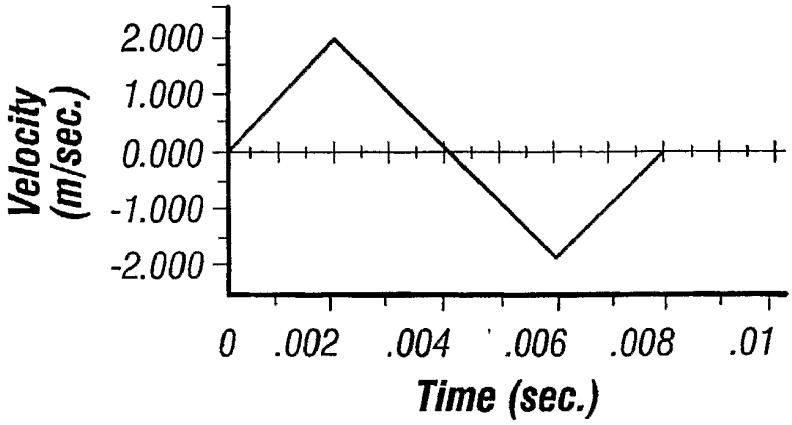
Velocity (m/sec.)
2.000
1.000
0.000
-1.000
-2.000
0
.002
.004
.006
.008
.01
Time (sec.)

FIG. 2B

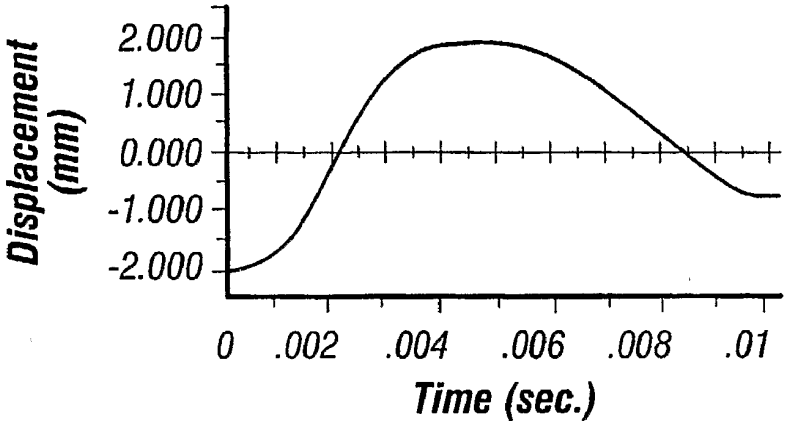
Displacement (mm)
2.000
1.000
0.000
-1.000
-2.000
0
.002
.004
.006
.008
.01
Time (sec.)

FIG. 2C

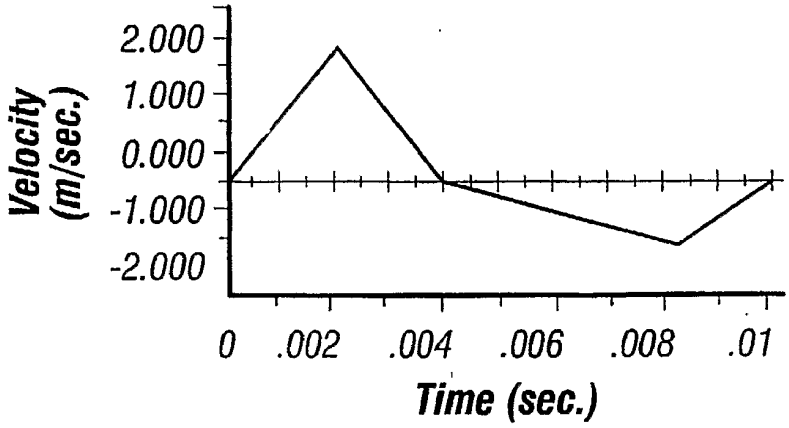
Velocity (m/sec.)
2.000
1.000
0.000
-1.000
-2.000
0
.002
.004
.006
.008
.01
Time (sec.)

FIG. 2D

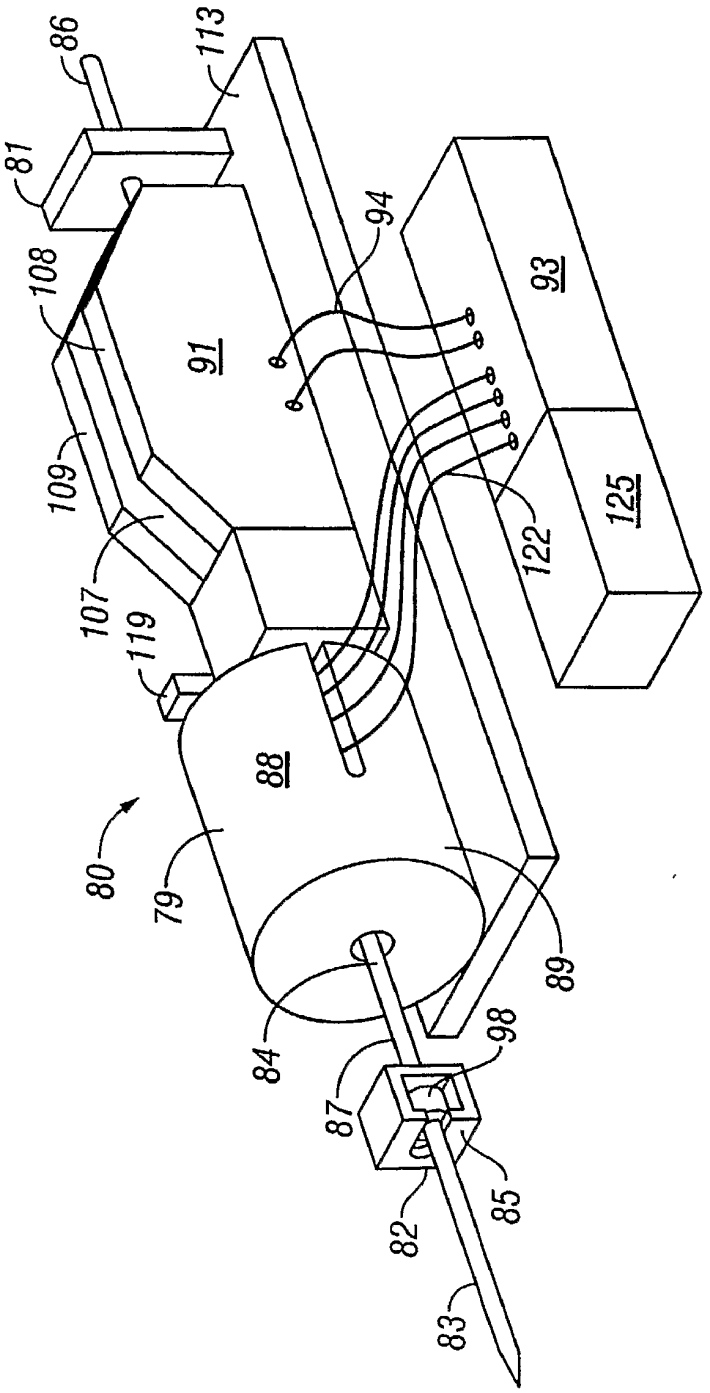
86
113
81
108
94
93
91
109
125
122
107
119
88
80
79
89
84
98
87
85
82
83

FIG. 4

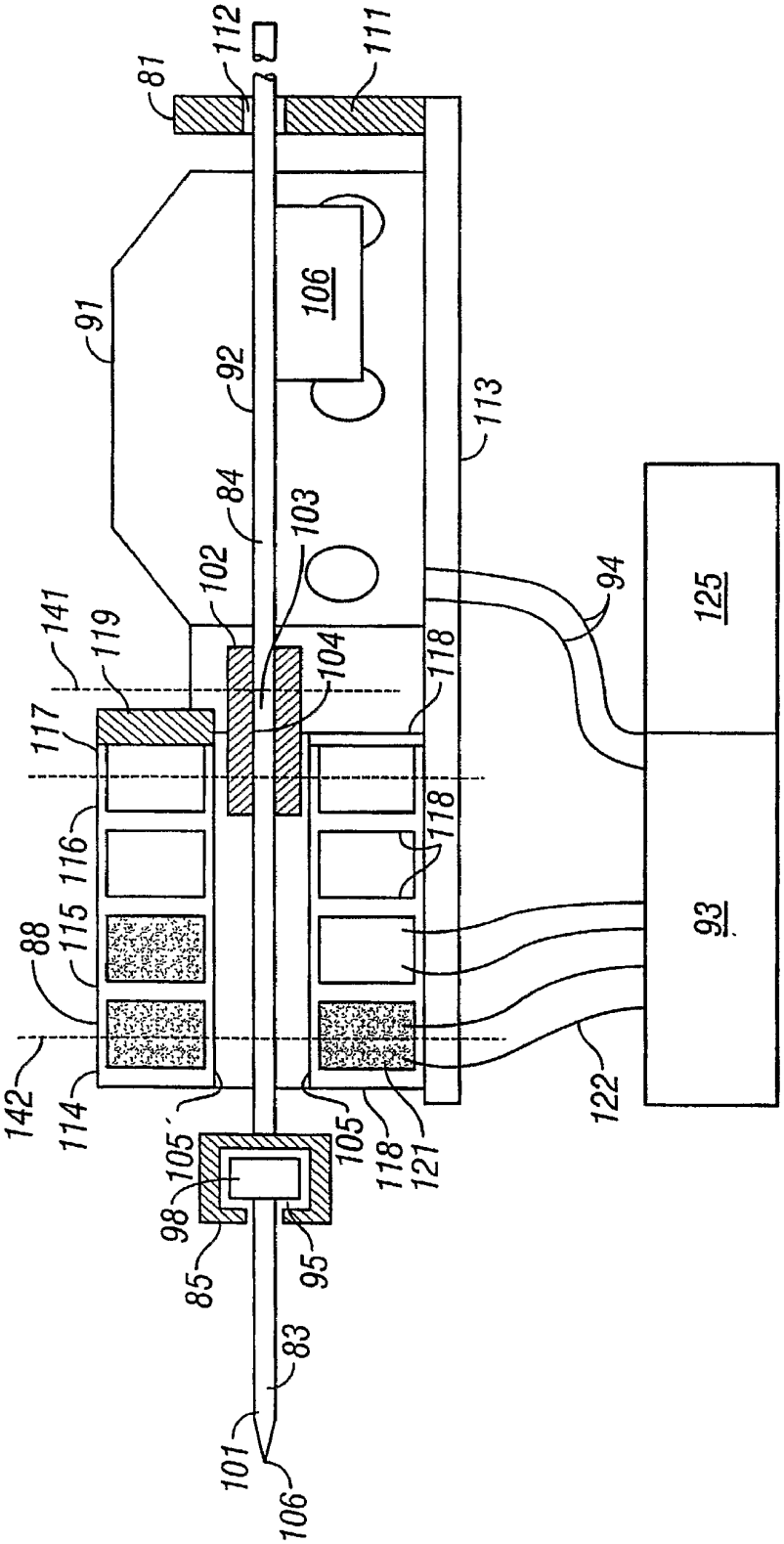
81
112
111
91
106
92
113
84
103
102
94
125
141
119
104
118
117
118
116
115
88
93
142
114
105
105
118
121
122
98
85
95
83
101
106

FIG. 5

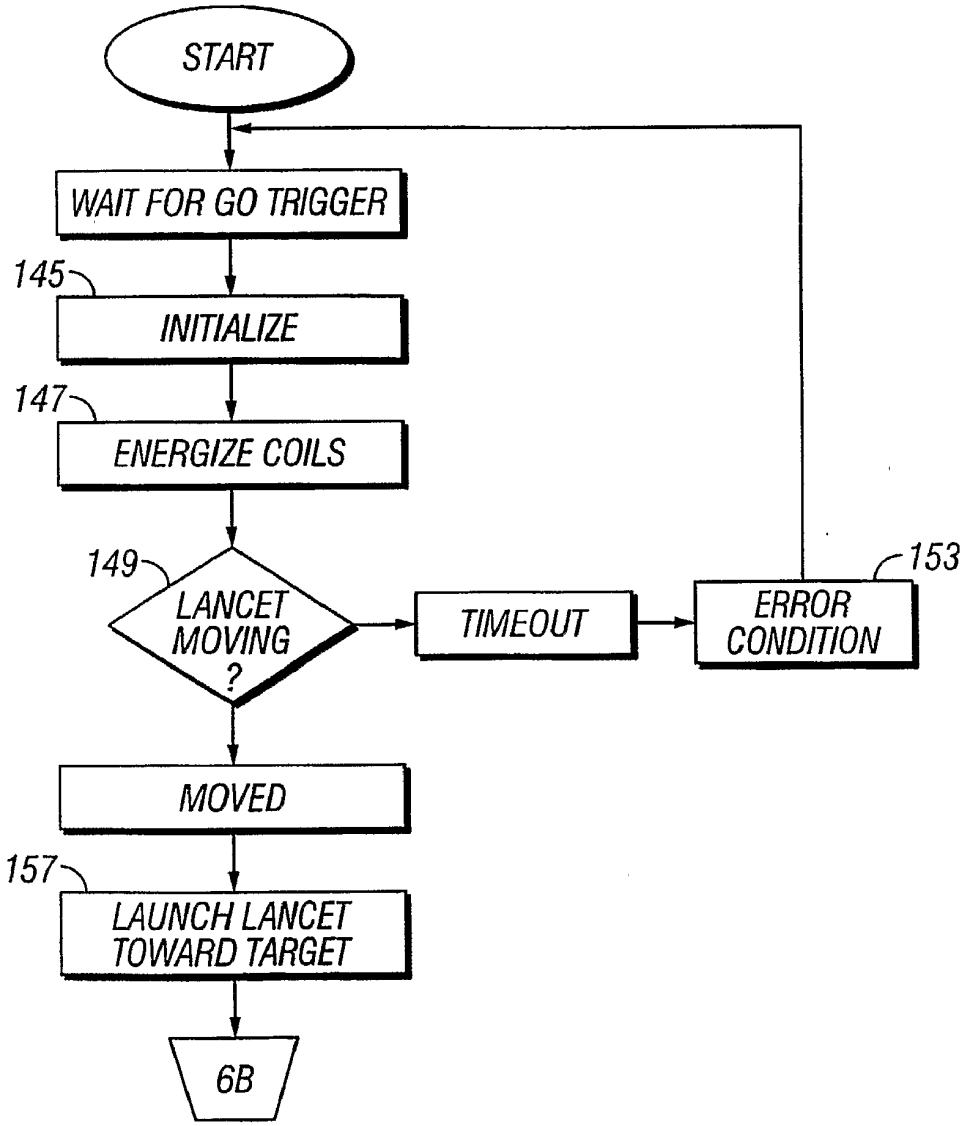
START
WAIT FOR GO TRIGGER
145
INITIALIZE
147
ENERGIZE COILS
149
LANCET MOVING ?
TIMEOUT
ERROR CONDITION
153
MOVED
157
LAUNCH LANCET TOWARD TARGET
6B

FIG. 6A

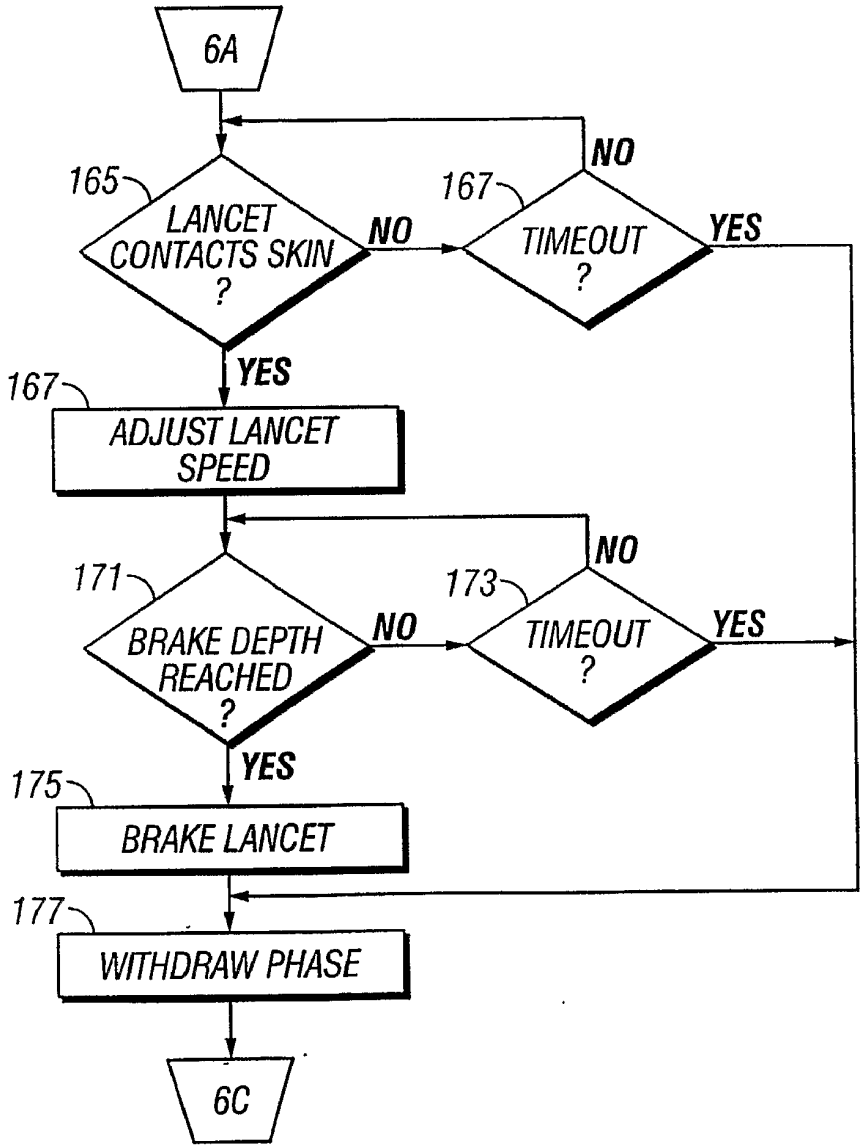
6A
165
LANCET CONTACTS SKIN ?
NO
167
TIMEOUT ?
NO
YES
YES
167
ADJUST LANCET SPEED
171
BRAKE DEPTH REACHED ?
NO
173
TIMEOUT ?
NO
YES
YES
175
BRAKE LANCET
177
WITHDRAW PHASE
6C

FIG. 6B

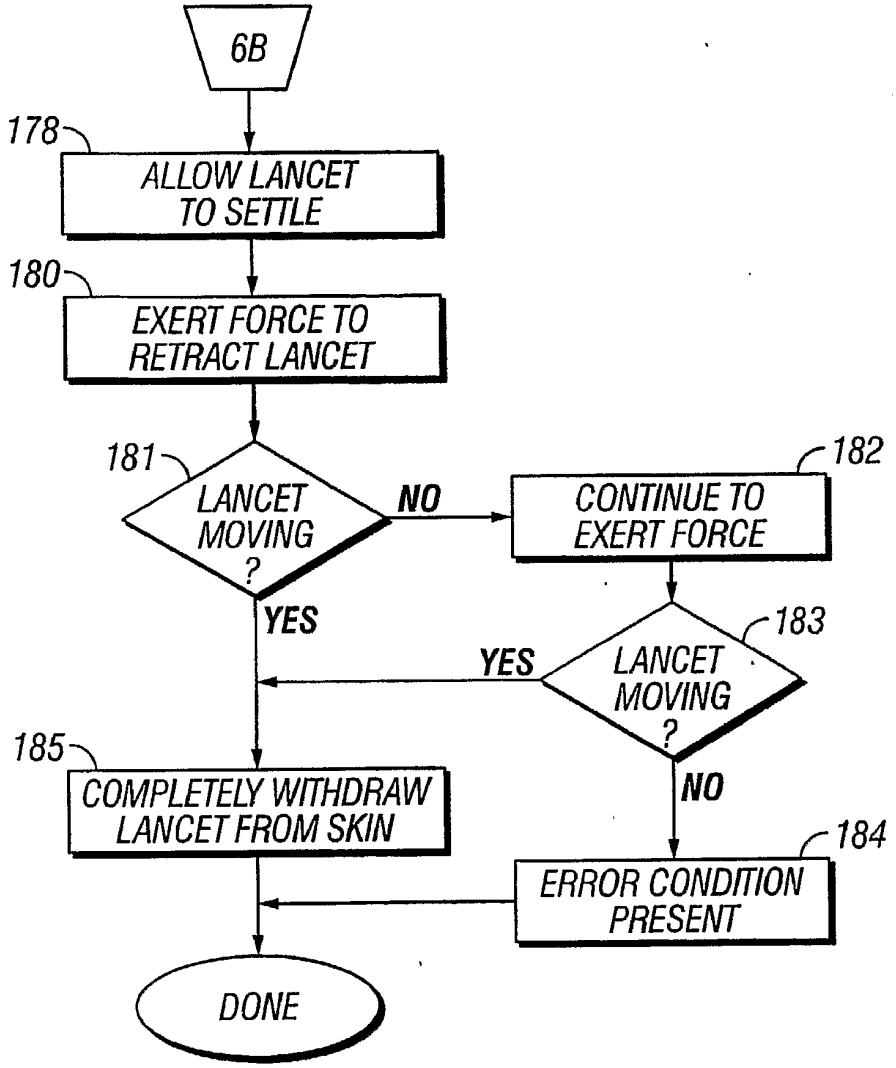
6B
178
ALLOW LANCET TO SETTLE
180
EXERT FORCE TO RETRACT LANCET
181
LANCET MOVING ?
NO
182
CONTINUE TO EXERT FORCE
YES
183
YES
LANCET MOVING ?
185
COMPLETELY WITHDRAW LANCET FROM SKIN
NO
184
ERROR CONDITION PRESENT
DONE

FIG. 6C

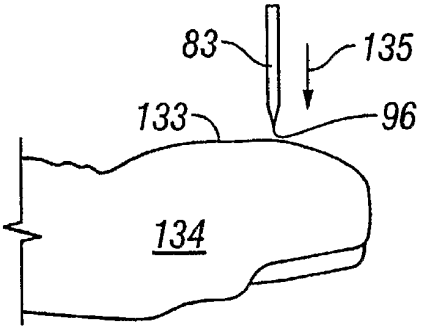


FIG. 7

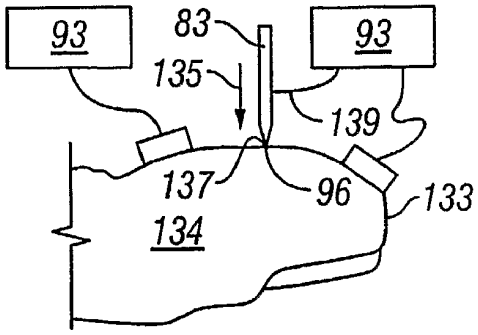


FIG. 8

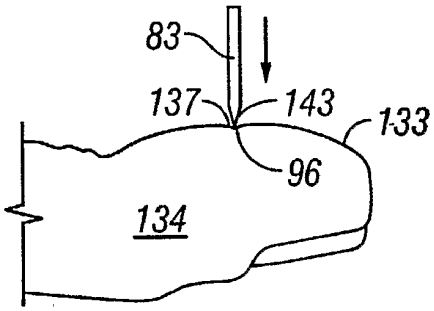


FIG. 9

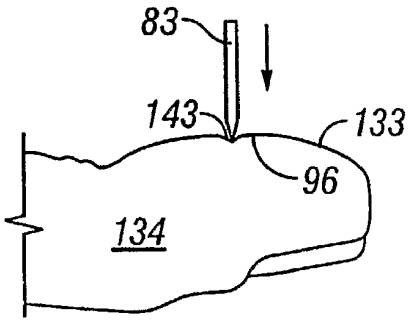


FIG. 10

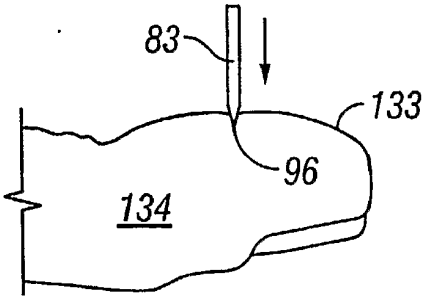


FIG. 11

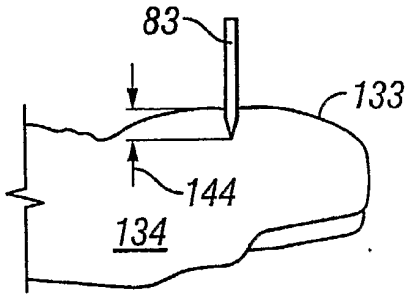


FIG. 12

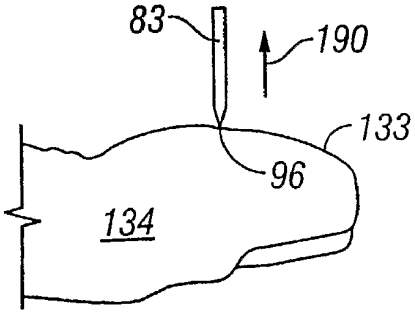


FIG. 13

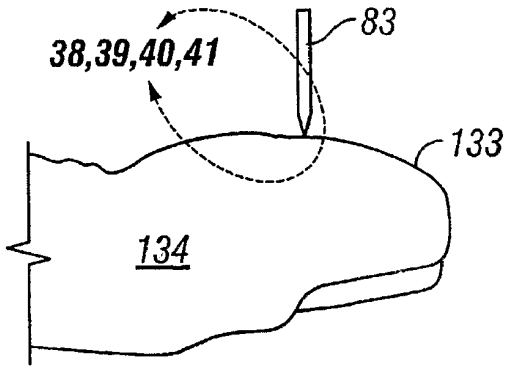


FIG. 14

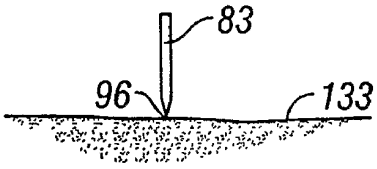


FIG. 15

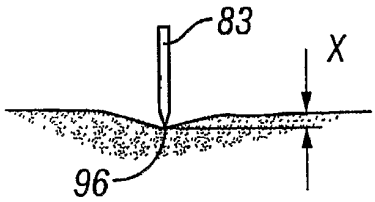


FIG. 16

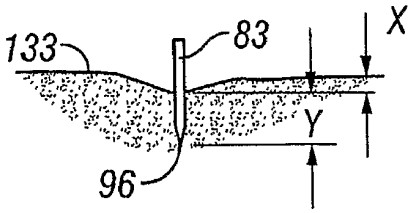


FIG. 17

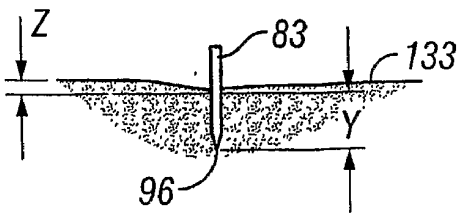


FIG. 18

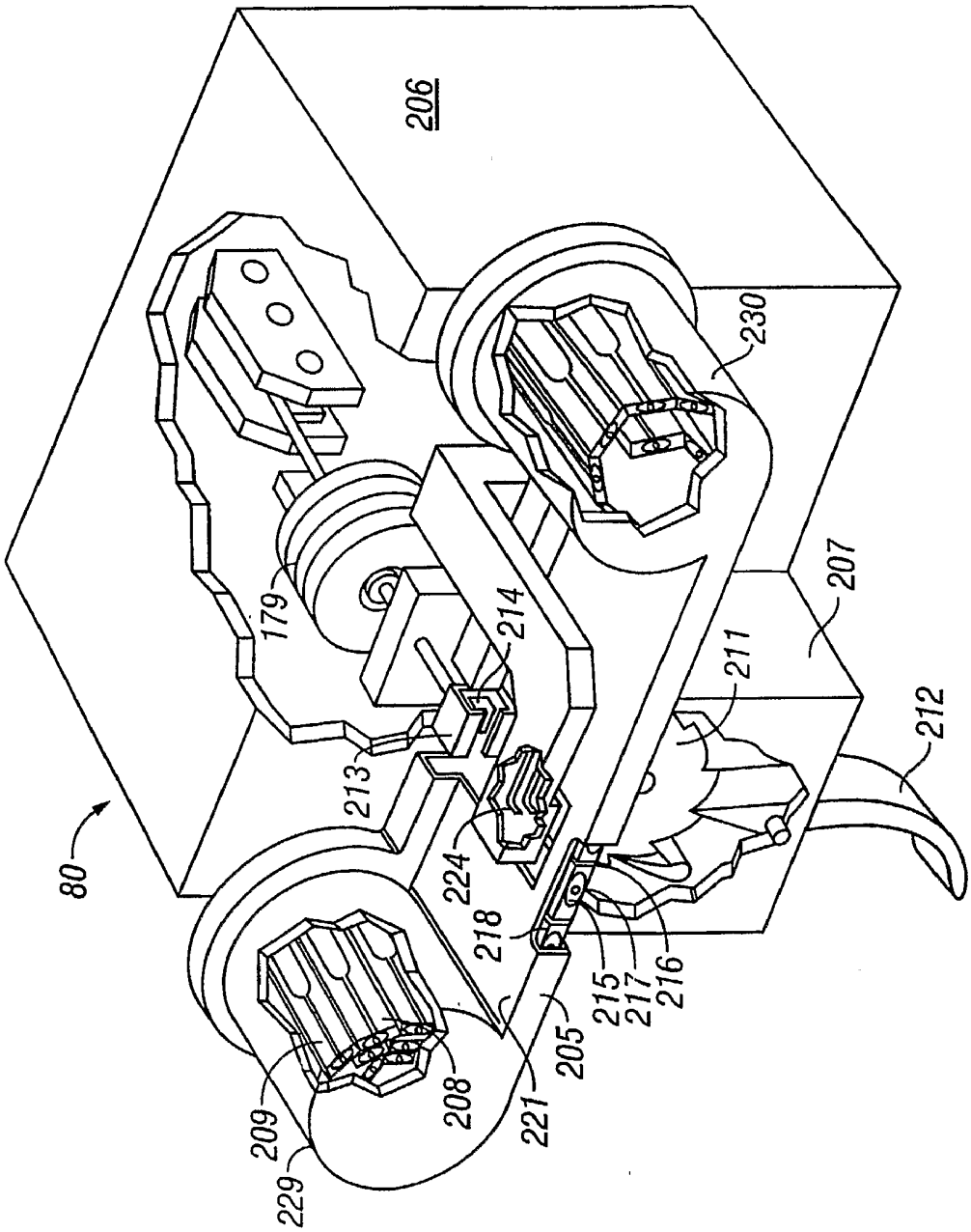
206
230
207
211
212
179
214
213
224
218
215
217
216
205
221
208
209
229
80

FIG. 19

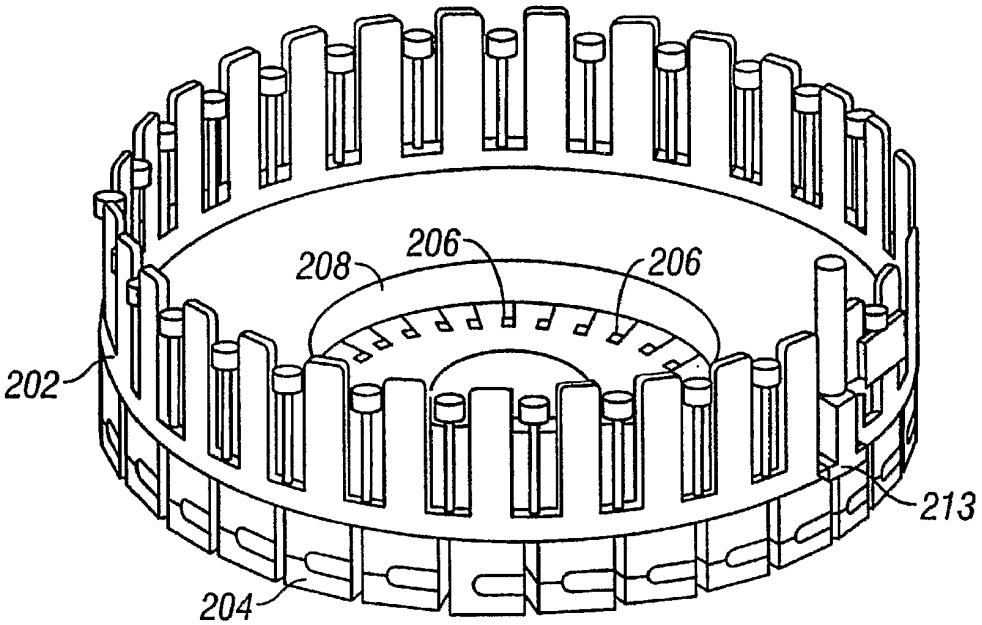


FIG. 20

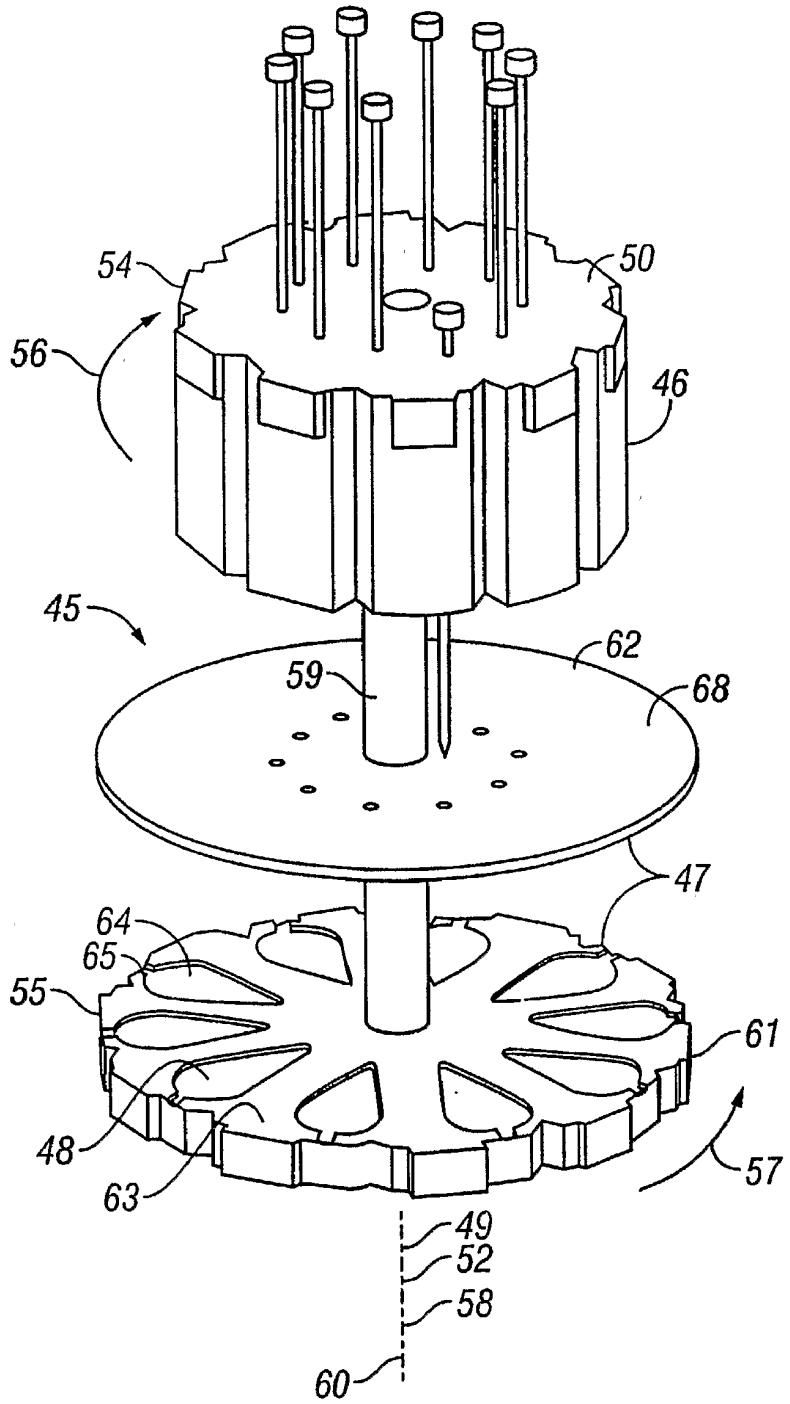


FIG. 21

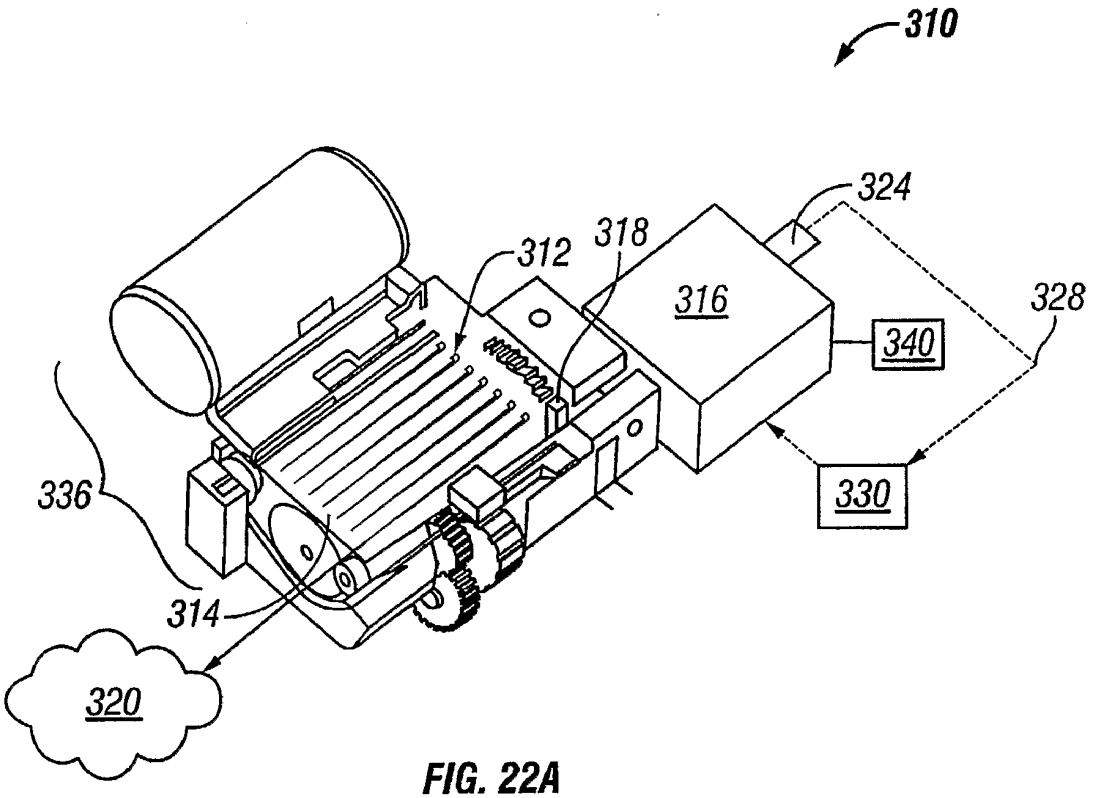


FIG. 22A

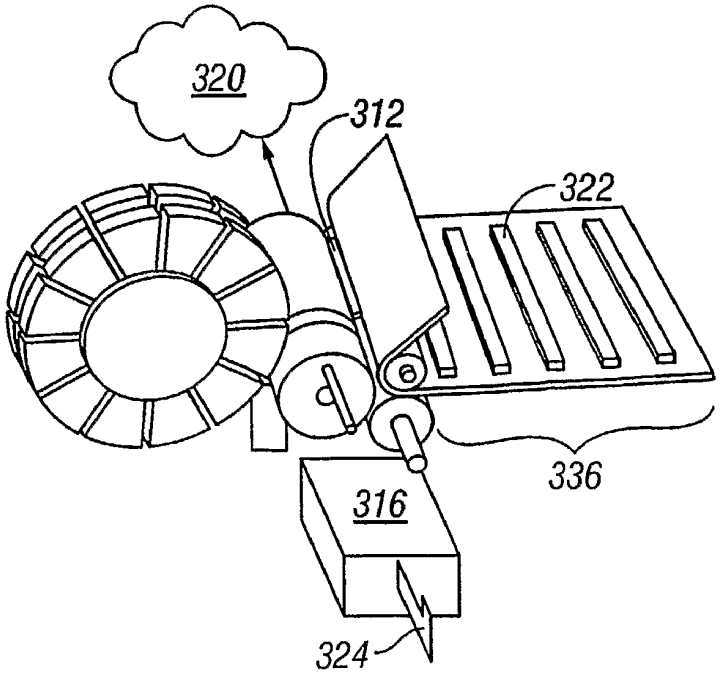


FIG. 22B

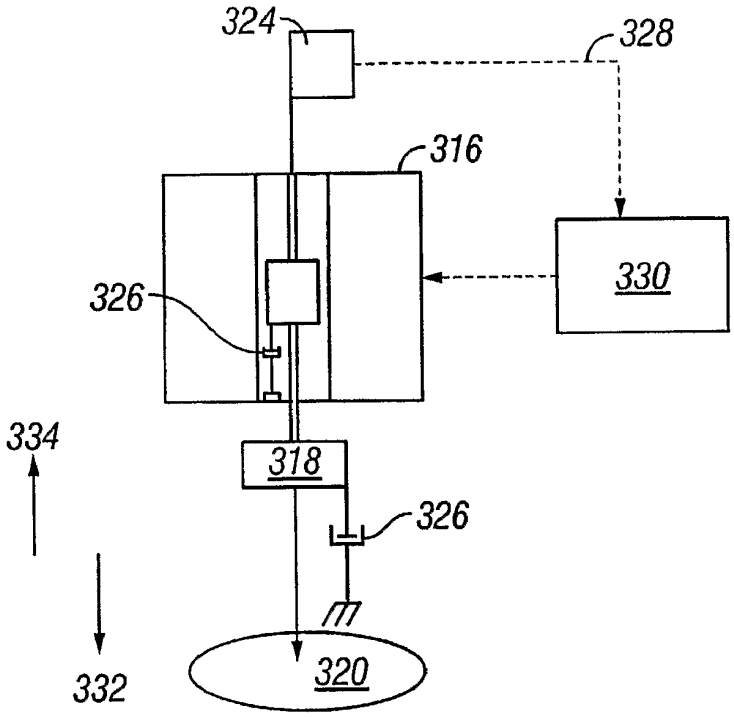


FIG. 22C

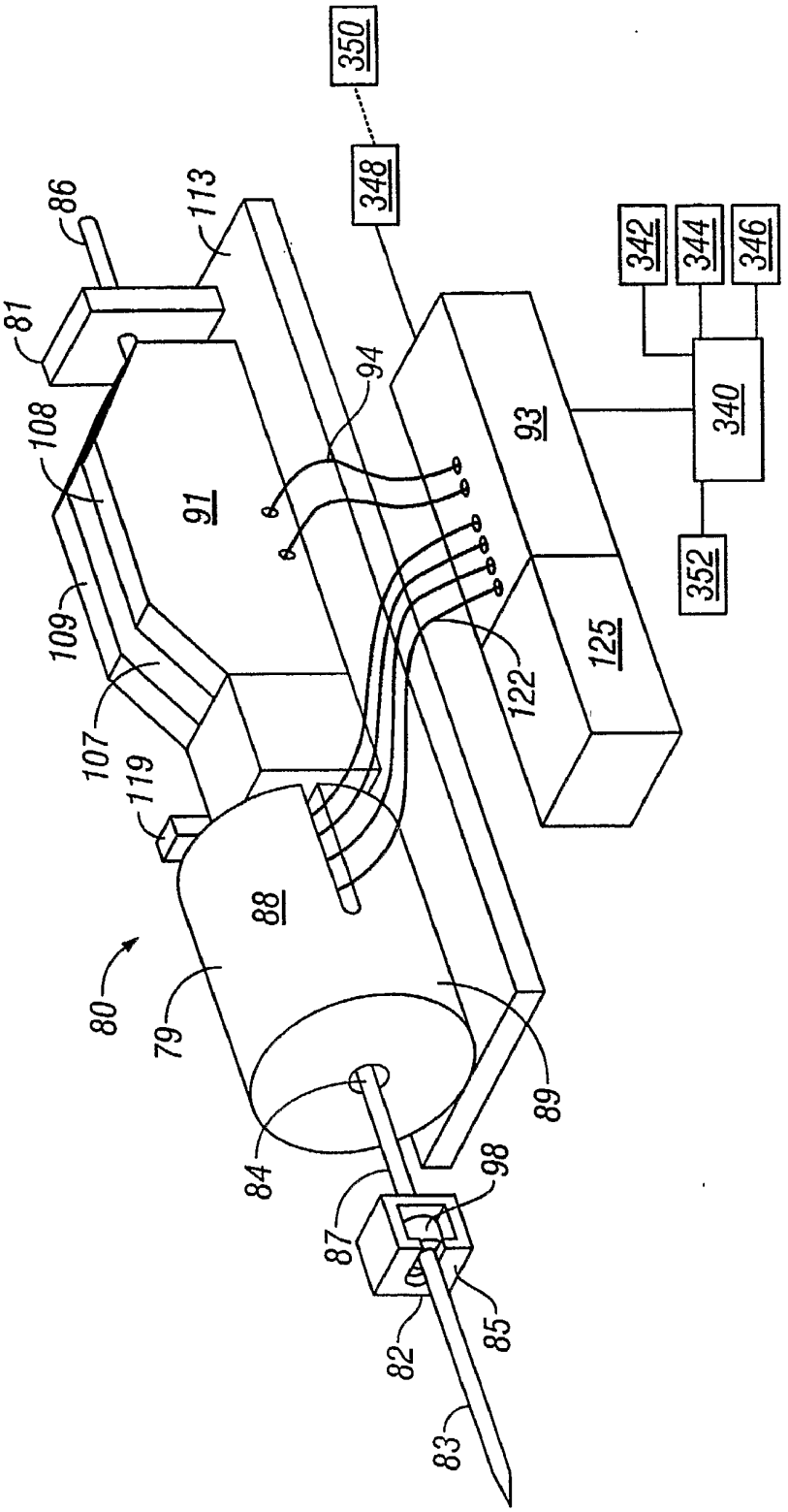
350
348
342
344
346
340
352
86
113
81
108
94
91
93
109
107
119
122
125
88
80
79
89
84
98
87
85
82
83

FIG. 23A

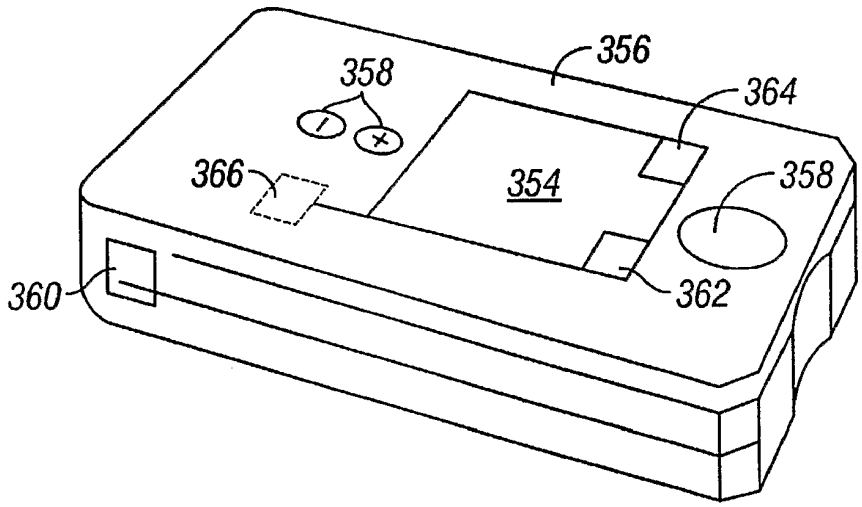


FIG. 23B

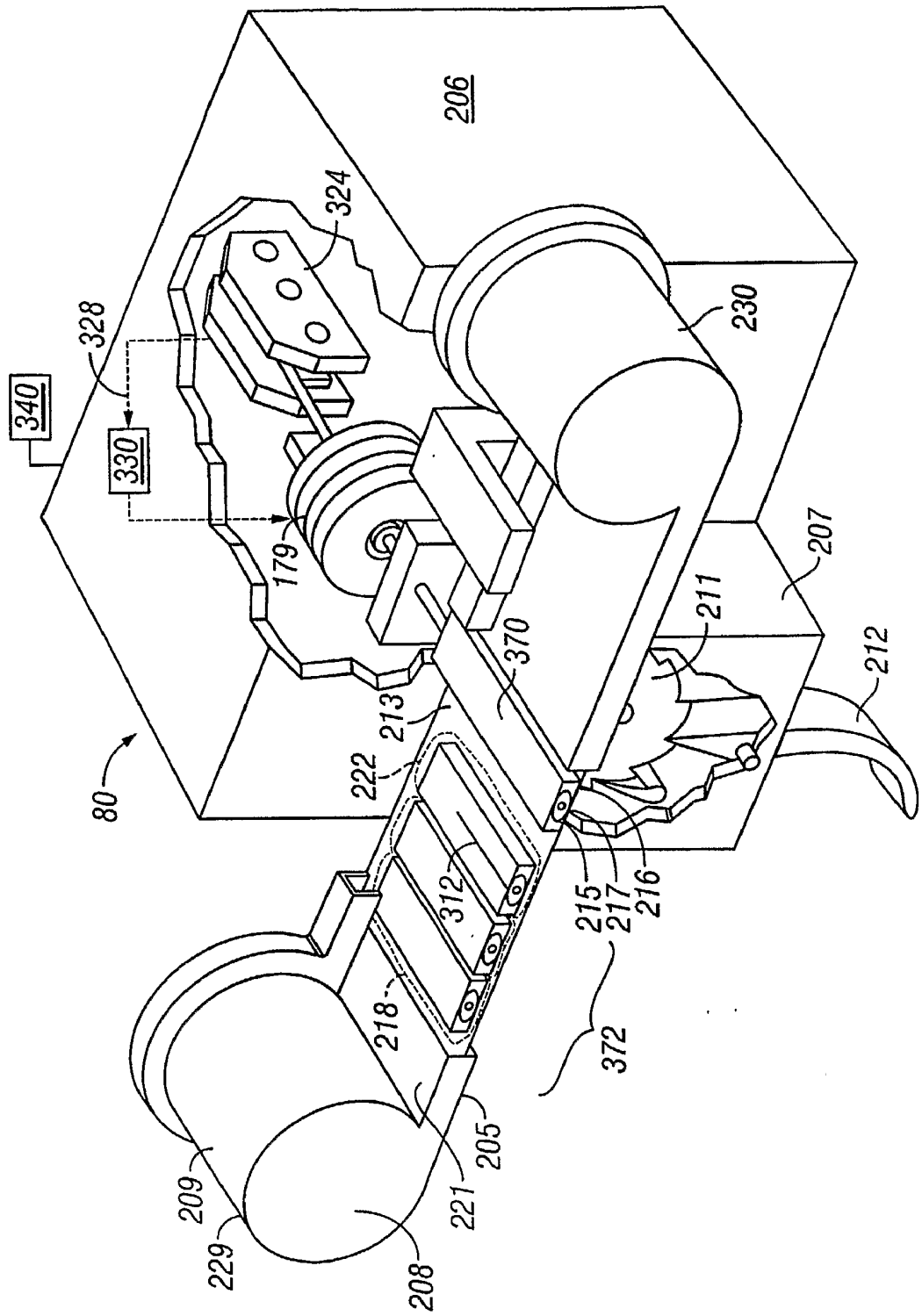
206
324
328
340
330
179
230
207
211
212
370
213
222
80
312
215
217
216
218
372
205
221
209
229
208

FIG. 24

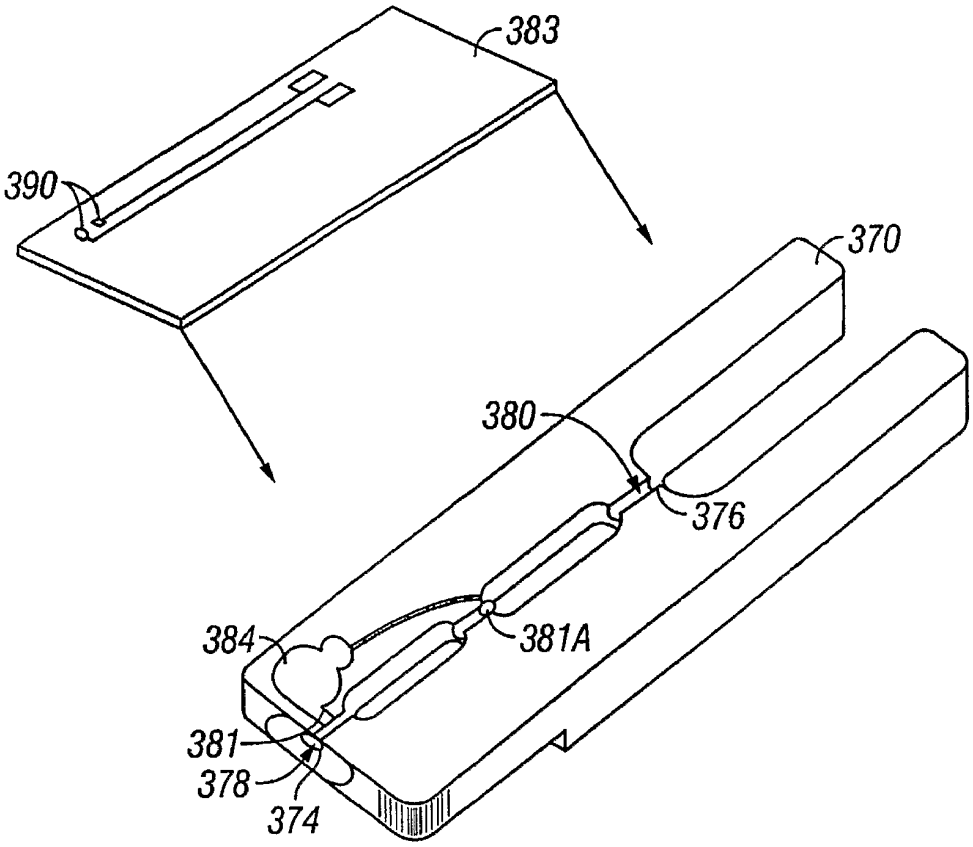
383
390
370
380
376
384
381A
381
378
374

FIG. 25

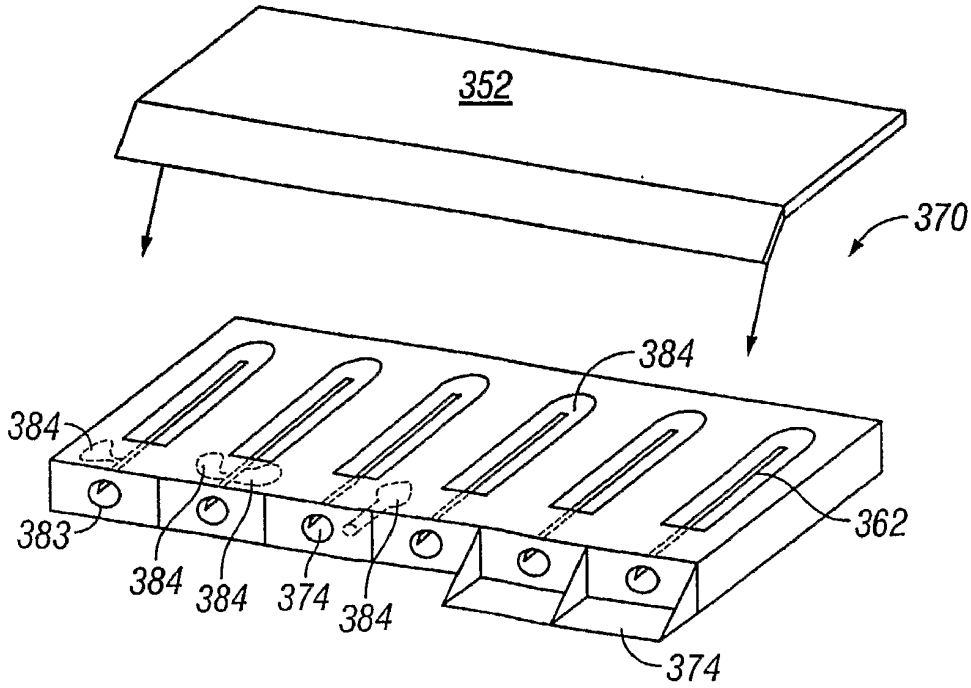
352
370
384
384
383
384
384
374
384
362
374

FIG. 26

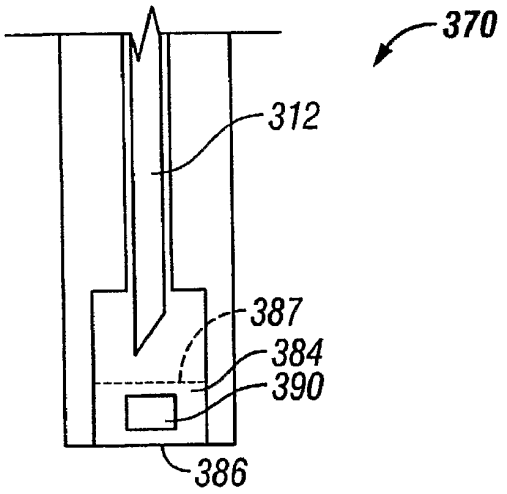


FIG. 27

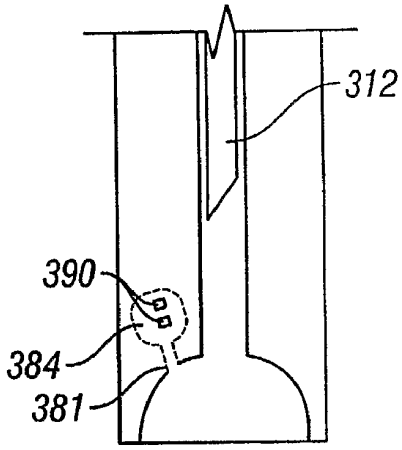


FIG. 28

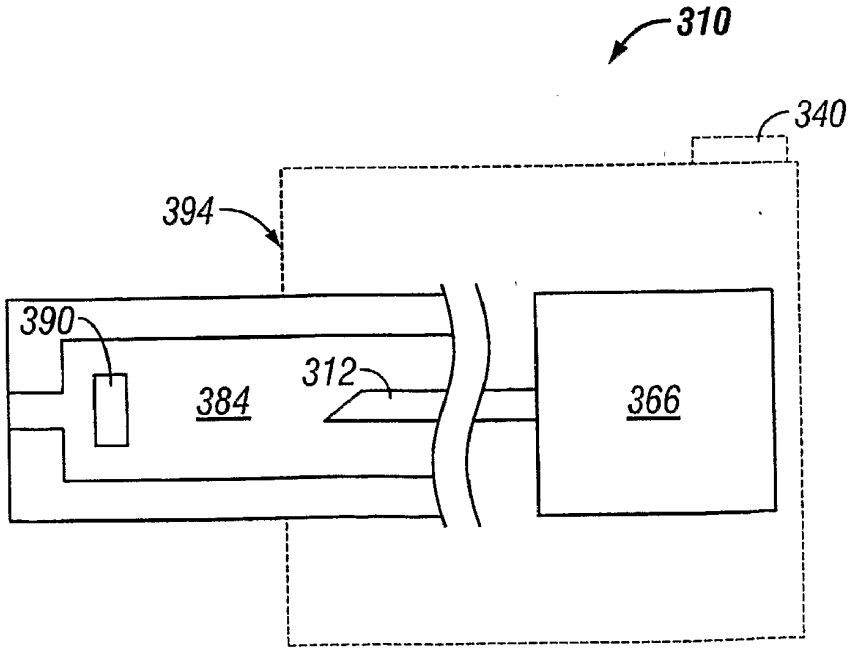


FIG. 29

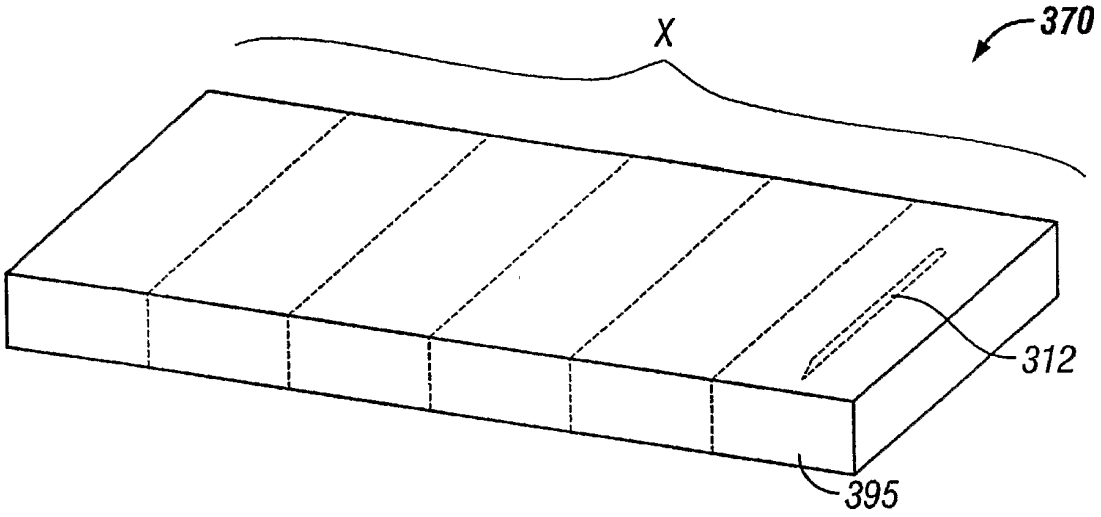


FIG. 30

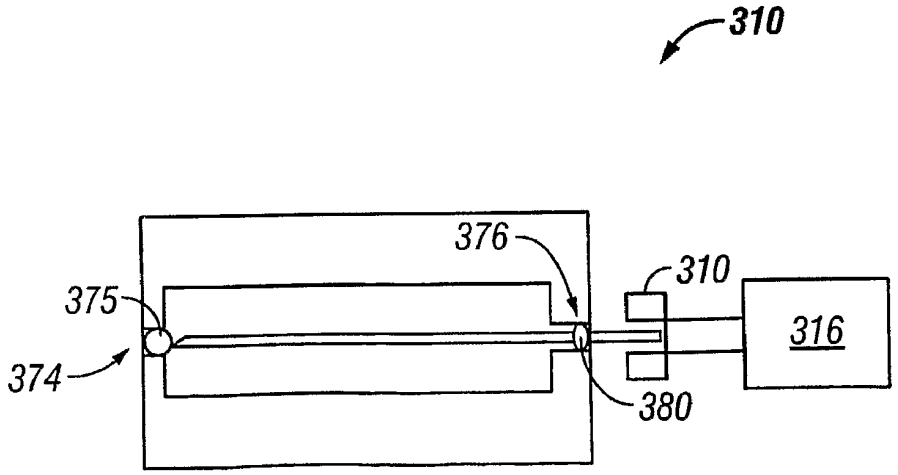


FIG. 31

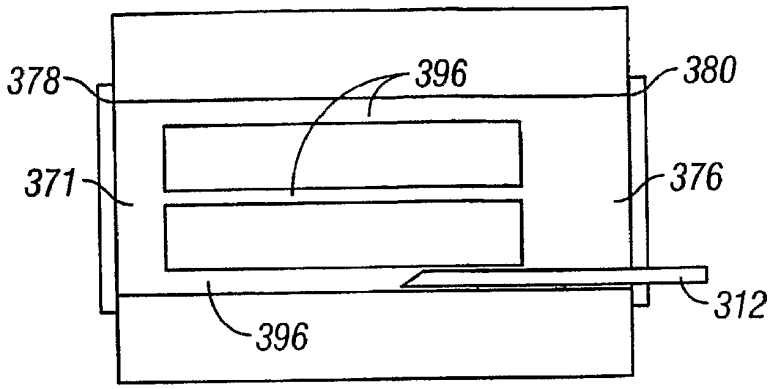


FIG. 32

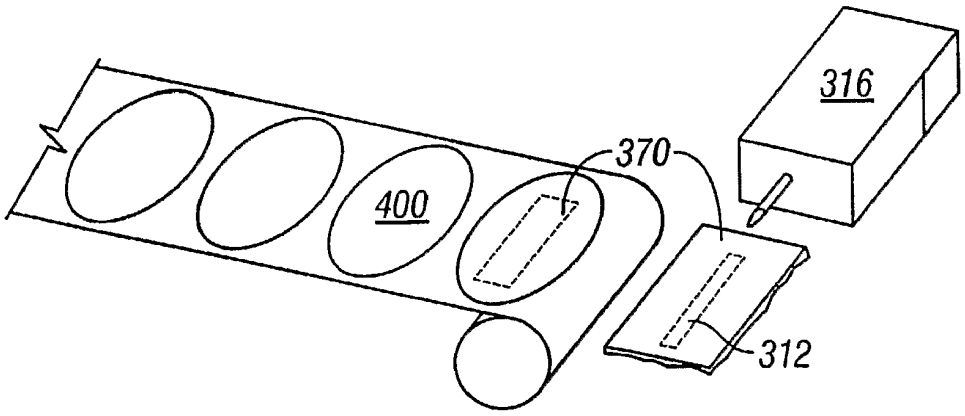


FIG. 33

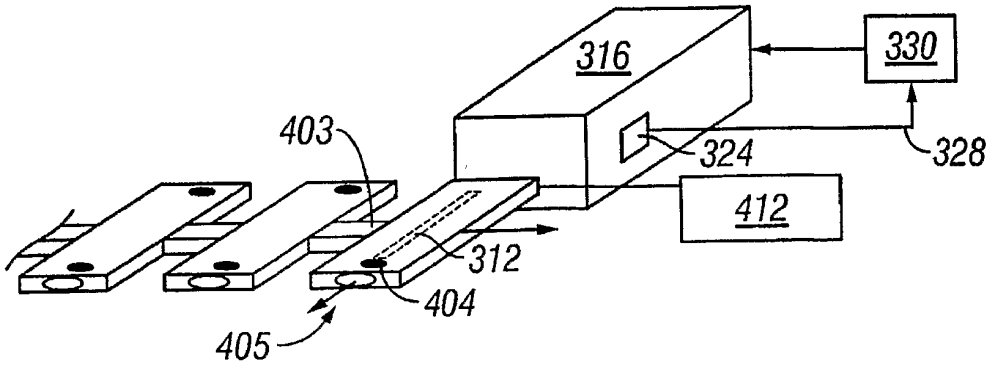
316
330
403
324
328
412
312
404
405

FIG. 34

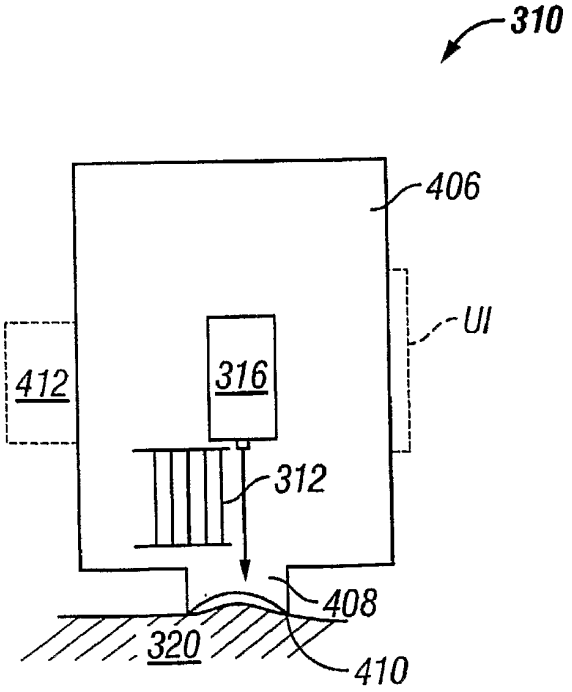
310
406
UI
412
316
312
408
320
410

FIG. 35

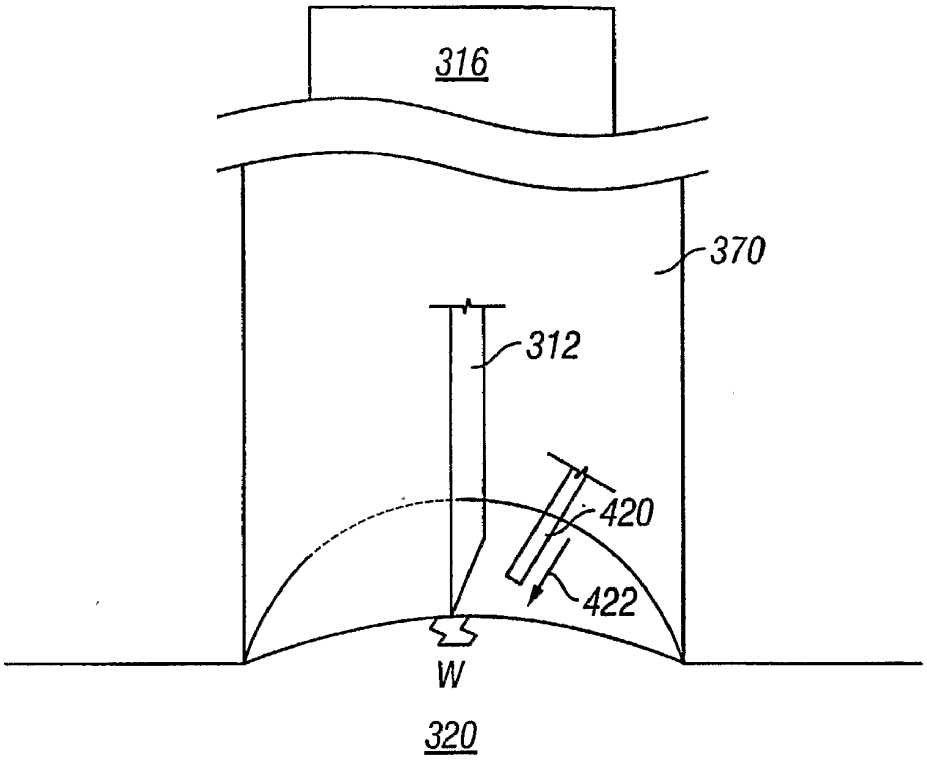


FIG. 36

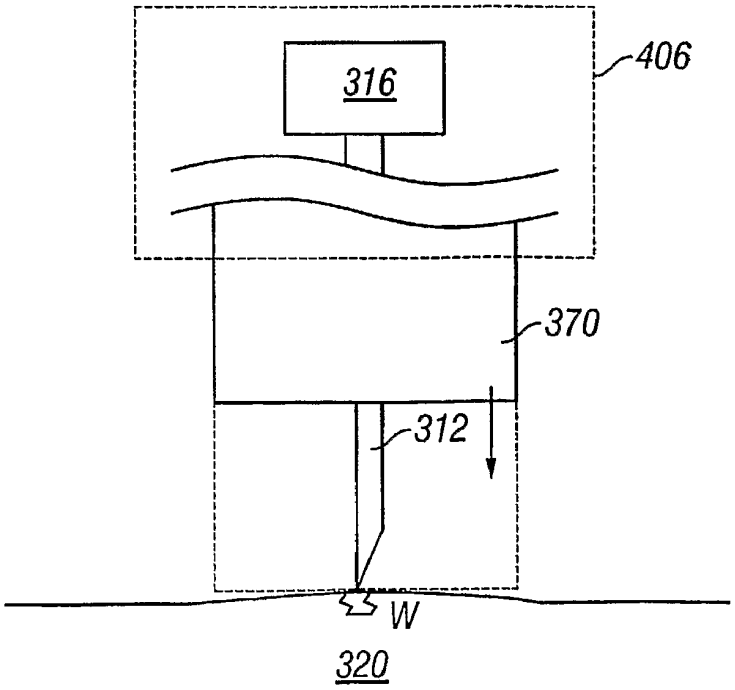


FIG. 37

| | | | |
|---|---|---|---|
| 专利名称(译) | 用于穿透组织的方法和设备 | | |
| 公开(公告)号 | EP1501410A4 | 公开(公告)日 | 2009-01-07 |
| 申请号 | EP2003733876 | 申请日 | 2003-04-21 |
| [标]申请(专利权)人(译) | 佩利坎技术公司 | | |
| 申请(专利权)人(译) | PELIKAN科技股份有限公司. | | |
| 当前申请(专利权)人(译) | PELIKAN科技股份有限公司. | | |
| [标]发明人 | BOECKER DIRK<br>ALDEN DON<br>FREEMAN DOMINIQUE M | | |
| 发明人 | BOECKER, DIRK<br>ALDEN, DON<br>FREEMAN, DOMINIQUE, M. | | |
| IPC分类号 | A61B5/15 A61B5/00 A61B5/145 A61B5/151 A61B5/155 | | |
| CPC分类号 | A61B5/15178 A61B5/14532 A61B5/150022 A61B5/150068 A61B5/150099 A61B5/150152 A61B5/150167 A61B5/150175 A61B5/150213 A61B5/150251 A61B5/150358 A61B5/150435 A61B5/150503 A61B5/150572 A61B5/150809 A61B5/150816 A61B5/150824 A61B5/15087 A61B5/15107 A61B5/15123 A61B5/15151 A61B5/15153 A61B5/15163 A61B5/15169 A61B5/15171 A61B5/157 | | |
| 代理机构(译) | 托列，伊恩 | | |
| 优先权 | 10/335217 2002-12-31 US<br>10/335218 2002-12-31 US<br>10/335219 2002-12-31 US<br>10/335212 2002-12-31 US<br>10/335257 2002-12-31 US<br>10/335258 2002-12-31 US<br>10/335215 2002-12-31 US<br>10/335259 2002-12-31 US<br>10/127395 2002-04-19 US<br>10/237261 2002-09-05 US<br>10/335082 2002-12-31 US<br>10/335099 2002-12-31 US<br>10/335252 2002-12-31 US<br>10/335241 2002-12-31 US<br>10/335220 2002-12-31 US<br>10/335211 2002-12-31 US<br>10/335073 2002-12-31 US<br>10/335182 2002-12-31 US<br>10/335183 2002-12-31 US<br>10/335052 2002-12-31 US<br>10/335240 2002-12-31 US | | |
| 其他公开文献 | EP1501410B1<br>EP1501410A2 | | |
| 外部链接 | Espacenet | | |

摘要(译)
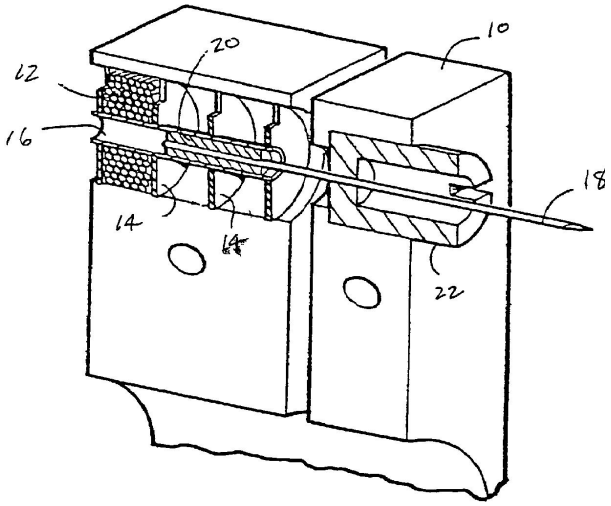
组织穿透装置包括穿透构件驱动器和盒。多个穿透构件与盒子集成在一起。当沿着路径前进到组织目标中时，每个穿透构件联接到穿透构件驱动器。穿透构件传感器连接到多个穿透构件。穿透构件传感器配置成提供与穿透构件穿过皮肤表面的穿透深度有关的信息。