(12) INTERNATIONAL APPLICATION PUBLISHED UNDER THE PATENT COOPERATION TREATY (PCT)

(19) World Intellectual Property Organization
International Bureau

(43) International Publication Date
8 May 2014 (08.05.2014)

WIPO | PCT

(10) International Publication Number
WO 2014/071079 A1

(51) International Patent Classification:
A61B 5/04 (2006.01) *H04B 7/24* (2006.01)
A61B 5/02 (2006.01) *A61N 1/05* (2006.01)

(21) International Application Number:
PCT/US2013/067882

(22) International Filing Date:
31 October 2013 (31.10.2013)

(25) Filing Language: English

(26) Publication Language: English

(30) Priority Data:
61/720,827 31 October 2012 (31.10.2012) US

(71) Applicant: **THE BOARD OF TRUSTEES OF THE LELAND STANFORD JUNIOR UNIVERSITY** [US/US]; Office Of Technology Licensing, 1705 El Camino Real, Palo Alto, CA 94306-1106 (US).

(72) Inventors: **POON, Ada, Shuk Yan**; Office Of Technology Licensing, 1705 El Camino Real, Palo Alto, CA 94306-1106 (US). **HU, Bob, S.**; Office Of Rechnology Licensing, 1705 El Camino Real, Palo Alto, CA 94306-1106 (US).

(74) Agents: **THOMAS, Justin** et al.; Shay Glenn LLP, 2755 Campus Drive, Suite 210, San Mateo, CA 94403 (US).

(81) Designated States *(unless otherwise indicated, for every kind of national protection available)*: AE, AG, AL, AM, AO, AT, AU, AZ, BA, BB, BG, BH, BN, BR, BW, BY, BZ, CA, CH, CL, CN, CO, CR, CU, CZ, DE, DK, DM, DO, DZ, EC, EE, EG, ES, FI, GB, GD, GE, GH, GM, GT, HN, HR, HU, ID, IL, IN, IR, IS, JP, KE, KG, KN, KP, KR, KZ, LA, LC, LK, LR, LS, LT, LU, LY, MA, MD, ME, MG, MK, MN, MW, MX, MY, MZ, NA, NG, NI, NO, NZ, OM, PA, PE, PG, PH, PL, PT, QA, RO, RS, RU, RW, SA, SC, SD, SE, SG, SK, SL, SM, ST, SV, SY, TH, TJ, TM, TN, TR, TT, TZ, UA, UG, US, UZ, VC, VN, ZA, ZM, ZW.

(84) Designated States *(unless otherwise indicated, for every kind of regional protection available)*: ARIPO (BW, GH, GM, KE, LR, LS, MW, MZ, NA, RW, SD, SL, SZ, TZ, UG, ZM, ZW), Eurasian (AM, AZ, BY, KG, KZ, RU, TJ, TM), European (AL, AT, BE, BG, CH, CY, CZ, DE, DK, EE, ES, FI, FR, GB, GR, HR, HU, IE, IS, IT, LT, LU, LV, MC, MK, MT, NL, NO, PL, PT, RO, RS, SE, SI, SK, SM, TR), OAPI (BF, BJ, CF, CG, CI, CM, GA, GN, GQ, GW, KM, ML, MR, NE, SN, TD, TG).

Published:

— *with international search report (Art. 21(3))*

(54) Title: WIRELESS IMPLANTABLE SENSING DEVICES

Fig. 2

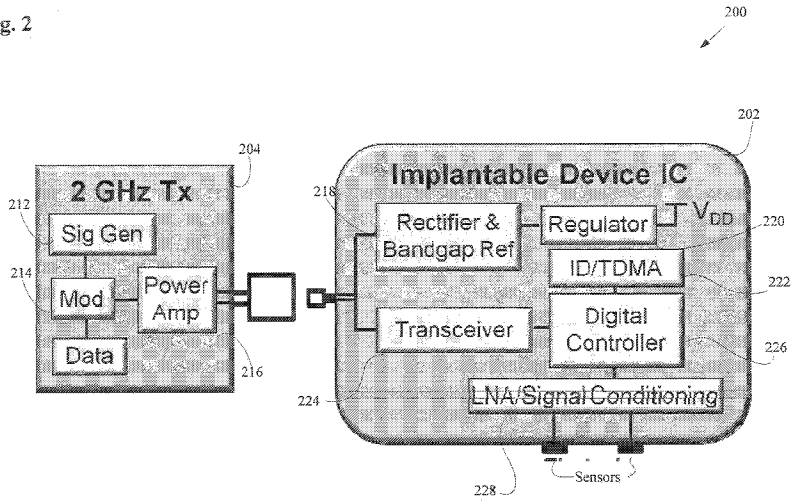

(57) Abstract: An implantable device is provided that can include any number of features. In some embodiments, the device includes a coil antenna configured to receive wireless power from a power source external to the patient. The device can include at least one sensor configured to sense a bodily parameter of the patient. The device can also include electronics configured to communicate the sensed bodily parameter of to a device located external to the patient. Methods of use are also described.

WO 2014/071079 A1

WIRELESS IMPLANTABLE SENSING DEVICES

CROSS REFERENCE TO RELATED APPLICATIONS

[0001] This application claims the benefit under 35 U.S.C. 119 of U.S. Provisional Patent Application No. 61/720,827, filed October 31, 2012, titled "Wireless Implantable Sensing Devices", which application is incorporated by reference as if fully set forth herein.

INCORPORATION BY REFERENCE

[0002] All publications and patent applications mentioned in this specification are herein incorporated by reference to the same extent as if each individual publication or patent application was specifically and individually indicated to be incorporated by reference.

FIELD

[0003] This disclosure relates generally to implantable monitoring and sensing devices. More specifically, this disclosure relates to implantable, untethered, wireless monitoring and sensing devices for diagnostic purposes, and devices capable of control for therapeutic purposes.

BACKGROUND

[0004] Cardiac arrhythmias affect more than 5 million people nationwide, and result in more than 1.2 million hospitalizations and 400,000 deaths each year in the United States. Atrial fibrillation (AF) and ventricular tachycardia (VT) account for most of the curable episodes if precise 3D mapping of the depolarization pattern is accessible. In the past five decades, various mapping systems have been proposed and developed. They can provide some but not all of the desired properties of an ideal mapping system.

[0005] The most common (AF) and the most lethal (VT) electrical disturbances of the heart are both caused by altered electrical conduction patterns. Therefore, the 3D mapping of the depolarization pattern has been an area of research for more than 5 decades. While conventional electrocardiogram (ECG) provides some ability to localize the pattern of depolarization, a more precise method would be highly desirable.

[0006] Methods like magnetocardiography (MCG) require highly specialized equipment and biomagnetic inversion problem is inherently ill-posed mathematically. MCG is a non-invasive mapping technique. But it requires the use of highly sensitive SQUID detector and suffers from sensitivity to noise due to the ill-posed inversion problem. Noninvasive techniques such as MCG have therefore been found unreliable for even investigative use.

[0007] Invasive intracardiac mapping is a laborious point-by-point mapping procedure that provides the only reliable analysis of the propagation electrical wavefront. Catheter-based activation and pacing in conjunction with surface electrocardiography and x-ray fluoroscopy is the most commonly used mapping technique in a clinical setting. However, the limitations of this technique are threefold. First, arrhythmia induction is often necessary for precise mapping. Patients who have structural heart disease (SHD) often have poor hemodynamic tolerance to the induced arrhythmia. Second, sequential recording is performed by a single or few electrode catheters maneuvered in the heart chamber. There is an implicit assumption that activations repeat in the same way from cycle to cycle at each site. This might not be a valid assumption in complex rhythms such as polymorphic arrhythmia. Thus, the procedure could last for several hours. Third, the mapping itself is limited to the reachable endocardial surface of the heart. Thus, local electrograms are not true representations of the depolarization pattern, especially in the thicker myocardium of the ventricles. Ideally, high-density maps of cardiac depolarization can be obtained without prolonged mapping.

[0008] Electrodes and stents have been implanted in human hearts for several decades. They have been deployed in the cardiac chambers as well as cardiac venous and arterial structures. Electrodes are currently millimeters in size and usually require a direct wired connection for operation. Stents measuring 50–100 microns in thickness are deployed routinely in the coronary arteries but lack of the ability to report back information from the local environment.

[0009] In the past few decades, newer mapping techniques have been proposed and developed. CARTO is the first 3D mapping system in electrophysiology (EP) testing. It utilizes a magnetic field sensor incorporated in the tip of the mapping catheter and an external magnetic field emitter located under the patient beneath the operating table. An electroanatomical map is generated when the mapping catheter is maneuvered in the heart chamber. The CARTO system, however, shares the same limitation of sequential recording and hence incurs long procedural time.

[00010] Non-contact multi-electrode mapping entails simultaneously recording of electrical activity at multiple sites. Other companies have developed a multi-electrode array with up to 64 electrodes in the shape of a balloon for endocardial mapping. Because the electrodes do not touch the endocardium, the mapping accuracy is limited.

[00011] In the UnEmap system developed by a group of researches in the University of Auckland, an epicardial electrode sock with over 100 electrodes is fitted over the heart. It is used extensively in experiments to better understand the underlying mechanisms of cardiac arrhythmias, but is seldom used in the clinical setting due to the invasiveness.

[00012] Optical mapping technique advances our understanding of cardiac electrophysiology in ways that have not been accomplished by other approaches. This technique uses a voltage-sensitive dye, invented by Nobel laureate Roger Tsien, to translate voltage changes into an optical signal, and provides better temporal and spatial resolution than other mapping techniques. Additionally, it allows simultaneous recording of membrane potential in the whole heart. Developed on experimental preparations using various species, these optical mapping techniques have recently been applied to the ex vivo human heart. These studies lead to the explanation of ventricular excitation and arrhythmias in terms of the hidden spatio-temporal patterns of propagation within the ventricular wall. However, the voltage-sensitive dyes are toxic. Therefore, optical mapping is not suitable for clinical use.

[00013] Table 1 summarizes the properties and limitations of the newer mapping techniques as compared with the conventional catheter-based technique and the invention disclosed herein.

Table 1

	Catheter-based	CARTO	Endocardial multielectrode	Epicardial multielectrode	MCG	Optical mapping	This invention
Parallel recording	No	No	Yes	Yes	Yes	Yes	Yes
Minimally invasive	Yes	Yes	Yes	No	Yes	No	Yes
Non-toxic	Yes	Yes	Yes	Yes	Yes	No	Yes
Simple instruments	Yes	Yes	Yes	Yes	No	Yes	Yes
In contact with tissue	Yes	Yes	No	Yes	N/A	N/a	Yes
True intramyocardial recording	No	No	No	No	No	No	Yes

SUMMARY OF THE DISCLOSURE

[00014] A patient monitoring system is provided, comprising a plurality of implantable, wirelessly powered sensing devices, each sensing device comprising an antenna configured to receive wireless power, at least one sensor configured to sense a bodily parameter of the patient, and electronics coupled to the antenna and the sensor and configured to communicate the sensed bodily parameter, and at least one external device configured to provide wireless power to the antennae of the sensing devices and configured to receive the sensed bodily parameters from the sensing devices.

[00015] In some embodiments, the at least sensor is selected from the group consisting of electrical sensor, pressure sensor, optical sensor, mechanical sensor, and temperature sensor.

[00016] In another embodiment, each sensing device measures less than 1mm x 1mm x 1mm in size.

[00017] In some embodiments, each antenna comprises a 3D coil.

[00018] In one embodiment, each of the sensing devices comprises an energy harvesting mechanism that is selected from the group consisting of magnetic harvesting mechanism, optical harvesting mechanism, mechanical harvesting mechanism, thermal harvesting mechanism, and chemical harvesting mechanism.

[00019] In some embodiments, the system further comprises a therapy element configured to apply therapy to the patient. In some embodiments, the therapy element is selected from the group consisting of electrode, optical element, ultrasound transducer, chemical element, and magnetic element.

[00020] An implantable, untethered sensing device is provided, the untethered sensing device comprising an antenna configured to receive wireless power from a power source external to a patient, at least one sensor configured to sense a bodily parameter of the patient, and electronics coupled to the antenna and the at least one sensor and configured to communicate the sensed bodily parameter to a device external to the patient.

[00021] In one embodiment, the at least sensor is selected from the group consisting of electrical sensor, pressure sensor, optical sensor, mechanical sensor, and temperature sensor.

[00022] In some embodiments, the device measures less than 1mm x 1mm x 1mm in size.

[00023] In another embodiment, the antenna comprises a 3D coil.

[00024] In some embodiments, each of the sensing devices comprises an energy harvesting mechanism that is selected from the group consisting of magnetic harvesting mechanism, optical harvesting mechanism, mechanical harvesting mechanism, thermal harvesting mechanism, and chemical harvesting mechanism.

[00025] In one embodiment, the sensing device further comprises a therapy element configured to apply therapy to the patient. In some embodiments, the therapy element is selected from the group consisting of electrode, optical element, ultrasound transducer, chemical element, and magnetic element.

[00026] A method of monitoring a patient parameter is also provided, comprising implanting at least one wirelessly powered sensing device into a patient, providing wireless power to the at least one sensing device with an external device, sensing a bodily parameter of the patient with the at least one sensing device, and communicating the sensed bodily parameter from the at least one sensing device to the external device.

[00027] In some embodiments, the at least one sensing device is implanted into a part of the body selected from the group consisting of a heart, brain, vascular system, and abdomen of the patient.

[00028] In another embodiment, the bodily parameter is selected from the group consisting of an EEG, EKG, ECG, blood pressure, core temperature, blood flow, resistance, impedance, and pressure of fluid within the patient.

[00029] In some embodiments, the method further comprises providing therapy to the patient with the sensing device. In some embodiments, the therapy comprises electrical stimulation, chemical stimulation, optical stimulation, or magnetic stimulation, or mechanical stimulation.

[00030] In some embodiments of the systems and methods disclosed herein, the sensing devices do not comprise a battery. In some embodiments, the sensing devices are powered only when receiving wireless power from the external device.

[00031] In some embodiments, the sensing devices receive wireless power in the mid-field where energy is exchanged through a combination of inductive and radiative modes.

[00032] In one embodiment, the sensing device receive wireless power at an operating frequency ranging from approximately 100 MHz to 5 GHz.

BRIEF DESCRIPTION OF THE DRAWINGS

[00033] The novel features of the invention are set forth with particularity in the claims that follow. A better understanding of the features and advantages of the present invention will be obtained by reference to the following detailed description that sets forth illustrative embodiments, in which the principles of the invention are utilized, and the accompanying drawings of which:

[00034] Figs. 1a-1c illustrate one embodiment of an implantable wireless sensing system.

[00035] Fig. 2 is a schematic drawing of a system comprising a sensing device and an external device.

[00036] Figs. 3a-3c provide additional views of the 3D structure of the sensing device of Fig. 1c.

[00037] Fig. 4 shows another embodiment of a sensing device.

DETAILED DESCRIPTION

[00038] This disclosure describes methods and apparatus for replacing large “dumb” and tethered electrode sensing devices with multiple implantable or injectable “smart” untethered wireless-powered sensing devices. These untethered sensors can include electronics comprising integrated circuit (IC) chips configured to sense body parameters (e.g.,an electrogram),a wireless interface to transmit the sensed body parameters to an external device or detector, and a unique identification to locate each sensor. The systems described herein can include control over the

types of body parameters to monitor, the duration of monitoring, and the number of locations within the body to monitor simultaneously.

[00039] This disclosure provides a novel mapping system comprising a plurality of implantable, wirelessly powered sensing and control devices configured to create a high-density map in real time or on demand of sensed body parameters (e.g.,cardiac depolarization) using simple and minimally invasive procedures and sensing devices without the need for prolonged mapping time.

[00040] An array of untethered, wirelessly-powered, small, and individually addressable electrode sensing devices can be implanted or injected into the body, such as into the circulatory system or into an organ, muscle, skin or body cavity of the patient. In a cardiac application, these sensing devices can be configured to detect the local depolarization patterns which can then be simultaneously interrogated by an external detector. The external detector can be adapted to demultiplex signals from these sensing devices at different locations, and reconstruct the depolarization map in real time. This mapping system can revolutionize the way of measuring bodily parameters such intracardiac electrical activities, assist cardiologists to ablate complicated arrhythmias, and reduce the procedural time of electrophysiology (EP) testing. In addition, it can provide medical researches a flexible tool to better understand the electrical signal propagation and test out new hypothesis of the initiation of arrhythmias in cardiac tissue.

[00041] Wireless sensing and/or therapy devices disclosed herein can integrate the various circuit components of a wireless sensing device (e.g., wireless powering circuits, telemetry circuits, and the electrode sensors) into a single sensor IC chip. The sensing devices disclosed herein can include optimized designs for the implanted antenna, electrode configurations, 3D packaging of the entire probe, and the external detector. It is a goal of the systems described herein to minimize the effect of biological reaction to the presence of implanted wireless sensing devices.

[00042] Figs. 1a-1c illustrate one embodiment of a wireless sensing system 100. Referring to Fig. 1c, the system 100 can include, for example, at least one implantable sensing device 102 configured to receive wireless power, and an external wireless power source and detector 104 configured to transmit and/or receive wireless power and communications. The wireless power source can include, for example, a transmitter coil connected to a power source. In some embodiments, the wireless power source can be separate from the detector, and in other embodiments they can be integrated into the same device. Any number of sensing devices can be implanted in the human body, depending on the bodily parameters to be sensed. For example, several sensing devices can be implanted on or within the heart of a patient to map local depolarization patterns of the heart.

[00043] As will be described in more detail below, the sensing devices can be untethered, wirelessly powered sensing devices configured to sense a body parameter of a patient and wirelessly communicate the sensed information to an external device. In some embodiments, the sensing devices can be configured to sense one or more of the following: parameters of the body, such as ECG, EKG, EEG, resistance, or impedance, pressure parameters of the body such as the pressure of fluids within a lumen or an organ, temperature of the body or of bodily fluids, or optical parameters of the body, glucose content, or other chemical, biological, or particular molecular content in the blood or other organs. In some cases, certain composition of material can be sensed, such as presence of blood, puss, or bacterial infection. This can be achieved by including appropriate sensors on the sensing devices, such as electrodes, pressure sensors, temperature sensors, optical sensors, etc.

[00044] In one embodiment, a plurality of implanted sensing devices forms a network of sensing and stimulating devices that can operate in coordinated manner to close the loop for action with respect to measured quantities. For instance, in one embodiment, a device could measure cardiac output such as blood flow out of heart and another device could stimulate the heart to regulate the cardiac output.

[00045] Fig. 1b shows multiple sensing devices 102a, 102b, and 102c implanted at different locations in or on the heart. In some embodiments, the sensing devices can be implanted or injected directly into the myocardium of the heart, or alternatively, can be affixed to the epicardium or endocardium of the heart. Fig. 1b also shows various electrogram readings measured by the sensing devices. Although Fig. 1b shows the sensing devices being implanted in the heart, it should be understood that in other embodiments, the sensing devices can be implanted in other parts of the body.

[00046] In some embodiments, when the sensing devices are implanted within the heart of a patient, as shown in Fig. 1b, each sensing device can measure an electrical parameter such as the local electrogram. The external device or detector of the system can be configured to interrogate the measurement from each sensing device and deduce the propagation of excitation wavefront versus time. In some embodiments, the complete interrogation period for all sensing devices can be short enough compared to the cardiac signals in order to achieve high temporal resolution. Multiple sensing devices can be deployed within the body to simultaneously measure electrograms or other bodily parameters. Due to miniature form factor of the sensors, the numerous implanted devices can also achieve high spatial resolution.

[00047] Fig. 1c illustrates one embodiment of an implantable sensing device 102. The sensing device 102 can be delivered via injection, for example, and can comprise an antenna 106, an integrated-circuit (IC) chip 108, and at least one sensor 110. In some embodiments, the

antenna 106 can comprise a coil connected to the IC chip 108 to form a resonant or non-resonant system. The antenna 106 of the sensing device 102 can be inductively coupled to the wireless power source and detector 104 of Fig. 1a to receive wireless power and communications, and also to transmit communications to the detector. In some embodiments, the device size can be 1 x 1 x 1 mm, if sufficient power can be transferred to the device. In other embodiments, the device can be elongated in one dimension such that its diameter is small enough to fit in the needle, but has a larger antenna cross section for higher power harvesting capability. Depending on the operating environment, delivery method, and power consumption, a device could be as little as 100 μm and up to several centimeters in one or more dimensions.

[00048] In some embodiments, the sensor 102 can comprise an electrode, but it should be noted that in other embodiments the sensor can be any type of sensor adapted to measure a bodily parameter, such as a pressure sensor, optical sensor, temperature sensor, etc. The sensing device can optionally include other features, such as a power source (e.g., a battery, a capacitor, etc). In some embodiments, each sensing device can include a unique identification (ID) so as to identify the individual sensors. The unique ID can be used by the IC chip 108, or by an external detector (such as external detector 104) to identify the measurements taken by that individual sensor or induce localized stimulation to a particular region of the organ.

[00049] The IC chip 108 can be configured to provide signal processing directly on the sensing device. In some situations, it can be cheaper and more efficient to process the measured data on the sensing device itself, and transmit the processed data to the external device. Processing locally can be more efficient if the processing can be done with fairly simple analog or digital circuitry. The IC chip can include an energy harvesting and power management block, a matching network, a transceiver for telemetry with external reader, a sensor interface with signal conditioning circuitry, a signal conditioning and pulse generation block for stimulation, data conversion circuits, auxiliary circuit blocks, such as power-on-reset circuits, and a controller. Integrating all the electronics described into a single IC chip leads to having fewer discrete components and therefore allows the sensing devices to be miniaturized to the sizes described herein.

[00050] The controller can manage the localized device operation, process commands from the external reader, packetize and send out sensed data back to the external reader. The controller can also contain digital or analog signal processing blocks which can analyze and process sensed data and can adjust the device's course of action or performance based on the processed information. For instance, if the controller determines that its analog-to-digital converter resolution is too low, it can increase its effective resolution or adjust gain of signal conditioning circuit to improve the performance, without engagement of the external reader. One other

example for adjustment of performance is to automatically tune the cutoff frequencies of the filters in the sensor signal conditioning block in order to pass only the desired frequency components and filter out the interfering signals and noise. This may be done by the IC chip autonomously if all the necessary signal processing components are integrated on chip. Alternatively, the device can send raw data to the external reader. The reader can process the data and adjust the necessary parameters of the IC chip based on the information it receives by sending configuration commands to the IC chip.

[00051] Electronics and mechanical systems, empowered by modern CMOS, MEMS, and nanofabrication technologies, have been miniaturized faster than electro-chemical energy storage. As a result, embedded batteries typically dominate the size and weight of implanted medical devices. To combat this, in some embodiments the sensing devices of the present disclosure can be powered externally by the external power source and detector via transcutaneous wireless power transfer. The external detector 102 can include a transmit coil that can be coupled to a receive coil on each sensing device. The receive coil can be, for example, the antenna 106 illustrated in Fig. 1c.

[00052] The transmit coil of the external detector and the receive coil of the sensing device can form a coupled circuit, whereby current flowing in the transmit coil can create a magnetic field which induces current to flow in the receive coil of the one or more sensing devices. This induced current can then be used to power the sensing devices. In some embodiments, the sensing devices can be configured to operate and measure bodily parameters only when they are in the presence of a magnetic field formed by the external device. Thus, the sensing device 102 can be miniaturized by not including a battery or energy source. When the antenna of the sensing device is in the presence of the magnetic field formed by the external device, the sensing device can turn on or "wake up" and collect or information relating to body parameters. The sensing device can also communicate this sensed information externally while receiving wireless power.

[00053] Traditional wireless power transfer across human tissue operates in the near-field, where the transmit and receive coils include inductively coupled coils. Recently proposed systems for mid-range power transfer over air and through tissue also occur in the near-field; high efficiency can be obtained by tuning identical resonators to operate in the strongly coupled regime. Power transfer to medical implants, however, typically operates in the weakly coupled regime due to the asymmetry between a large external transmit coil and the small receive coil on the implant. In this configuration, it has been shown that optimal power transfer occurs in the mid-field where energy is exchanged through a combination of inductive and radiative modes.

[00054] Typical implantable devices rely on inductive coupling to harvest power and communicate with the external transmitter. This often implies large coil antennas for both the external transmitter and the implant device antenna. One of the key disadvantages of the inductive coupling is that these antennas cannot be significantly miniaturized because they become very inefficient. Increasing the frequency of operation increases the tissue absorption and tissue heating, however, it also increases antenna efficiency for very small antennas. Therefore, there is an optimal frequency at which enough power can be delivered to the small antennas, while limiting tissue heating to safe levels. In some embodiments, an optimal frequency of operation for the implantable sensors disclosed herein can be from approximately 100 MHz up to 5 GHz, depending on implantable device design, operating environment, required power and voltage, and device size.

[00055] Operating the implantable sensing devices of this disclosure for mid-range power transfer over high operating frequencies allows for miniaturization of the sensing devices that would not be possible in a system that uses inductive coupling. For example, sensing devices of the present disclosure can be miniaturized to have a total volume on the order of 1mm x 1mm x 1mm. Another benefit of higher frequency of operation is the higher available bandwidth that can be used to achieve higher data rates for communication. Also, higher frequency of operation desensitizes power transfer efficiency to alignment and orientation between external and implant device antennas.

[00056] Wirelessly powering the sensing devices of the present disclosure eliminates the need for leads extending through the skin, which simplifies the implantation procedure and reduces the risk of infection. The sensing devices described herein are therefore less invasive, and safer in the long term for a patient. This is especially important in applications such as brain or cardiac monitoring, where the risk of infection is so great. This also enables longer-lasting implantable devices by eliminating the need for a patient to undergo another surgery to replace a battery. This can be achieved by recharging a battery or energy storage element.

[00057] Although it can be advantageous to eliminate the size and weight of conventional chemical batteries, in some embodiments the sensing devices can include an energy source, such as a battery or a capacitor, which can be configured to store energy from the external device and power the sensing devices even when the external device is not wirelessly transmitting power to the sensing devices. This type of configuration can allow the sensing devices to monitor the patient even in the absence of an external charging device.

[00058] The sensing devices of Figs. 1a-1c can also be configured for wireless communication of data, to communicate the measured body parameters outside of the body. This data can be communicated to the external device via a wireless chip incorporated into the IC

chip 108, or alternatively, the data can be modulated onto the wireless power transfer signals between the transmission and receive coils of the external device and sensing devices, respectively. In some embodiments, the wireless communication of data can occur only during wireless power transfer between the external device and the implanted sensing devices, so as to reduce power consumption of the device during normal operation.

[00059] Fig. 2 is a schematic drawing of a system 200 comprising sensing device 202 and external device 204. The sensing device 202 and external device 204 can correspond to sensing device 102 and external device 104 of Figs. 1a-1c. The external device can wirelessly transfer power and data with a signal generator 212, a frequency modulator 214, and one or more power amplifiers 216. In Fig. 2, the individual components of the sensing device (e.g., rectifier and bandgap ref 218, regulator 220, ID/TDMA 222, transceiver 224, digital controller 226, LNA/signal conditioning module 228, etc) can be incorporated into the IC chip shown above in Fig. 1c.

[00060] Referring to Fig. 2, as recorded signals from the sensors (e.g., electrodes) are corrupted by motion artifact, dc-offset due to the skin-electrode contact resistance, and the 60-Hz interference, the sensor frontend LNA/signal conditioning module 238 can process the measured extracellular signal to obtain a clean signal and detect the timing of local depolarization. All the handshaking protocols with the external device, for example, the multiple access protocol, and the coordination among various building blocks within the cardiac probe can be coordinated by the digital controller 226. The ID of individual probe can be stored in the ID block 222. The transceiver block 224 modulates the processed intracellular signals and sends it to the external device, and demodulates received signals, for example, commands, from the external device. The rectifier 218 and regulator blocks 220 convert the oscillating radio waves incident on the received antenna to dc power for the operation of the sensing device.

[00061] Figs. 3a-3c provide additional details on the 3D structure of one embodiment of the sensing devices (expanding on what is shown in Fig. 1c). Since it is desirable to have the entire implanted device be as small as possible, this embodiment adopts a 3D packaging approach. The implanted antenna 306 can be a multi-turn micro-coil, for example. The antenna can be wire-bonded to the pads on a supporting substrate 312. The IC chip 308 and sensors 310 can also be bonded to the substrate. Fig. 3b shows a top-down view of the sensing device, and Fig. 3c shows a bottom-up view of the sensing device, giving a better view of sensors 310. In some embodiments, the sensing devices of Figs. 3a-3c can be approximately 1mm wide, 1mm long, and 1.3mm tall. In another embodiment, the sensing device can be 1mm x 1mm x 1mm.In another possible embodiment, the device can be encapsulated in an optically transparent package

that would enable optical methods of energy harvesting, stimulation, and sensing. Other types of transparency for packaging can be extended to include RF transparent materials, etc.

[00062] Fig. 4 shows another embodiment of a sensing device 402. In this embodiment, a planar loop antenna 406 can be used for the implantable device. The tradeoff between multi-turn antenna in the form of 3D coil versus a planar antenna with the same diameter, is that the 3D coil antenna has higher induced voltage, which can be advantageous to improve rectifier efficiency. However, it has additional losses associated with it and, therefore, can harvest less power as compared to a planar loop antenna. The illustrated components of the IC chip in Fig. 4 can correspond to the IC chip components described above in Fig. 2.

[00063] Compact, wirelessly powered, untethered sensing devices such as those described herein can be used in any number of medical applications. As described above, an array of sensing devices can be used to measure and map the electrical properties of the heart, and communicate that information wirelessly outside of the body to an external device. Uses within the heart are not limited to electrical properties, however, and the sensing devices can also be used to monitor blood flow, heart rate, core temperature, and more.

[00064] In another embodiment, a plurality of sensing devices outfitted with pressure sensors can be implanted within the venous system of a patient (e.g., within the pulmonary arteries) to measure the pressure of blood or the flow rate of blood at various points in the venous system.

[00065] In another embodiment, a plurality of sensing devices outfitted with electrical sensors or electrodes can be disposed on or near coronary stents and be configured to measure a resistance of blood inside the coronary stents as a way to monitor the degree of stenosis inside the stent. In this embodiment, the sensing devices could be used to report when a stent is wearing down and due for replacement. Thus, the sensing devices of the present disclosure can be used to monitor the effectiveness and lifetime of other medical devices implanted in the body.

[00066] The sensing devices described herein can also be implanted on or within the brain to measure various parameters relating to electrical activity, blood flow, or pressure in the brain. For example, in some situations surgeons need info on the local perfusion of the brain, since swelling after surgery can compromise that part of the brain. In this particular embodiment, sensing devices can be implanted in the brain to measure blood flow or other brain parameters as a way of monitoring the patient after surgery. The sensing devices described herein allow for measurement of brain activity directly without having leads that extend out through the skull, thereby reducing infection risk.

[00067] Until this point, the sensing devices have been described entirely as sensing or measurement devices. However, in some embodiments, the sensing devices can also include a therapy element, such as a stimulation electrode, configured to provide therapy to a patient. For

example, the sensors 110 of Fig. 1c can comprise electrodes and can be configured to provide, for example, cardiac or deep brain stimulation. In other embodiments, the therapy element can be configured to provide magnetic, electrical, optical, ultrasound, or chemical stimulation to bodily tissue or fluids.

[00068] As for additional details pertinent to the present invention, materials and manufacturing techniques may be employed as within the level of those with skill in the relevant art. The same may hold true with respect to method-based aspects of the invention in terms of additional acts commonly or logically employed. Also, it is contemplated that any optional feature of the inventive variations described may be set forth and claimed independently, or in combination with any one or more of the features described herein. Likewise, reference to a singular item, includes the possibility that there are plural of the same items present. More specifically, as used herein and in the appended claims, the singular forms "a," "and," "said," and "the" include plural referents unless the context clearly dictates otherwise. It is further noted that the claims may be drafted to exclude any optional element. As such, this statement is intended to serve as antecedent basis for use of such exclusive terminology as "solely," "only" and the like in connection with the recitation of claim elements, or use of a "negative" limitation. Unless defined otherwise herein, all technical and scientific terms used herein have the same meaning as commonly understood by one of ordinary skill in the art to which this invention belongs. The breadth of the present invention is not to be limited by the subject specification, but rather only by the plain meaning of the claim terms employed.

CLAIMS

What is claimed is:

1. A patient monitoring system, comprising:

a plurality of implantable, wirelessly powered sensing devices, each sensing device comprising an antenna configured to receive wireless power, at least one sensor configured to sense a bodily parameter of the patient, and electronics coupled to the antenna and the sensor and configured to communicate the sensed bodily parameter; and

at least one external device configured to provide wireless power to the antennae of the sensing devices and configured to receive the sensed bodily parameters from the sensing devices.

2. The system of claim 1 wherein the at least sensor is selected from the group consisting of electrical sensor, pressure sensor, optical sensor, mechanical sensor, and temperature sensor.

3. The system of claim 1, wherein each of the sensing devices comprises an energy harvesting mechanism that is selected from the group consisting of magnetic harvesting mechanism, optical harvesting mechanism, mechanical harvesting mechanism, thermal harvesting mechanism, and chemical harvesting mechanism.

4. The system of claim 1 further comprising a therapy element configured to apply therapy to the patient.

5. The system of claim 4 wherein the therapy element is selected from the group consisting of electrode, optical element, ultrasound transducer, chemical element, and magnetic element.

6. An implantable, untethered sensing device, the untethered sensing device comprising:

an antenna configured to receive wireless power from a power source external to a patient;

at least one sensor configured to sense a bodily parameter of the patient; and

electronics coupled to the antenna and the at least one sensor and configured to communicate the sensed bodily parameter to a device external to the patient.

7. The sensing device of claim 6 wherein the at least sensor is selected from the group consisting of electrical sensor, pressure sensor, optical sensor, mechanical sensor, and temperature sensor.

8. The sensing device of claim 6, wherein each of the sensing devices comprises an energy harvesting mechanism that is selected from the group consisting of magnetic harvesting mechanism, optical harvesting mechanism, mechanical harvesting mechanism, thermal harvesting mechanism, and chemical harvesting mechanism.

9. The sensing device of claim 6 further comprising a therapy element configured to apply therapy to the patient.

10. The sensing device of claim 9 wherein the therapy element is selected from the group consisting of electrode, optical element, ultrasound transducer, chemical element, and magnetic element.

11. A method of monitoring a patient parameter, comprising:
implanting at least one wirelessly powered sensing device into a patient;
providing wireless power to the at least one sensing device with an external device;
sensing a bodily parameter of the patient with the at least one sensing device; and
communicating the sensed bodily parameter from the at least one sensing device to the external device.

12. The method of claim 11 wherein the at least one sensing device is implanted into a part of the body selected from the group consisting of a heart, brain, vascular system, and abdomen of the patient.

13. The method of claim 11 wherein the bodily parameter is selected from the group consisting of an EEG, EKG, ECG, blood pressure, core temperature, blood flow, resistance, impedance, and pressure of fluid within the patient.

14. The method of claim 11 further comprising providing therapy to the patient with the sensing device.

15. The method of claim 14 wherein the therapy comprises electrical stimulation, chemical stimulation, optical stimulation, or magnetic stimulation, or mechanical stimulation.

16. The system of claim 1 wherein the sensing devices do not comprise a battery.

17. The system of claim 1 wherein the sensing devices are powered only when receiving wireless power from the external device.

18. The system of claim 1 wherein the sensing device receive wireless power at an operating frequency ranging from approximately 100 MHz to 5 GHz.

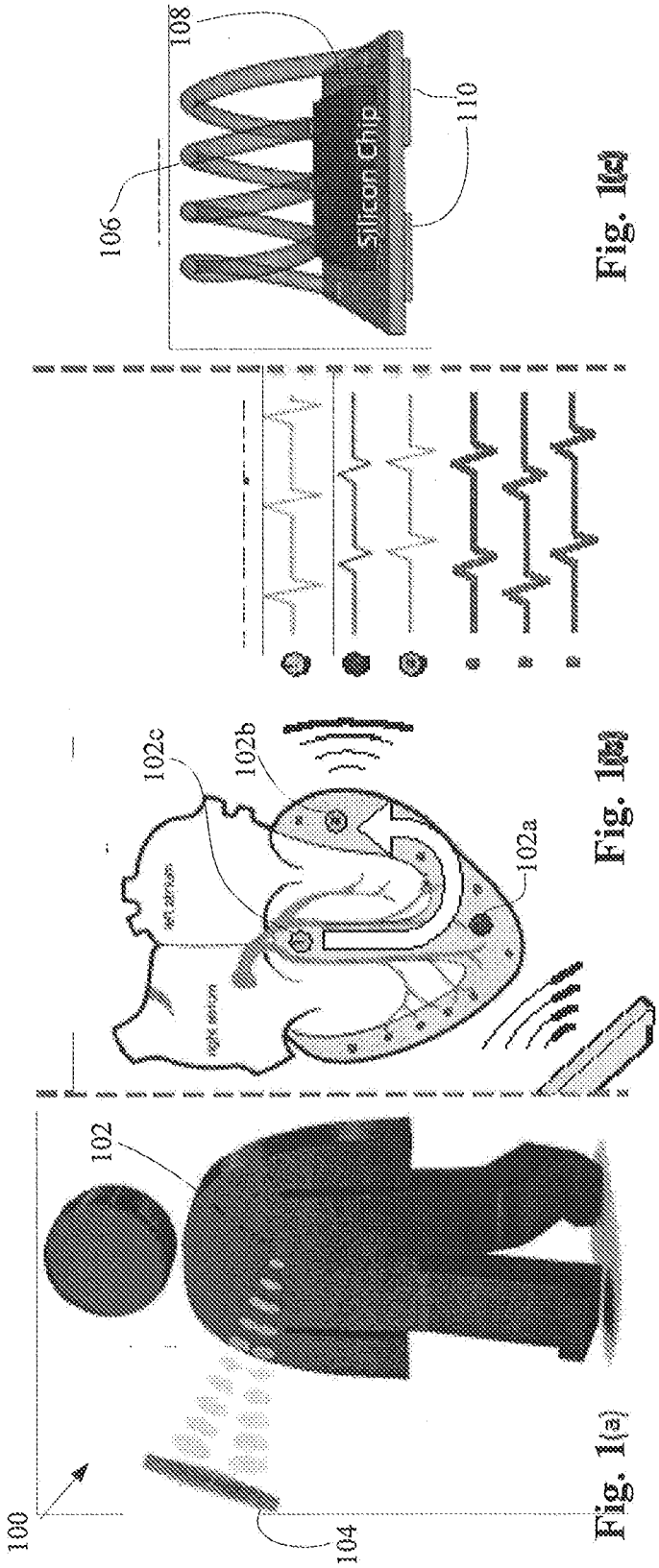

Fig. 1(a)

Fig. 1(b)

Fig. 1(c)

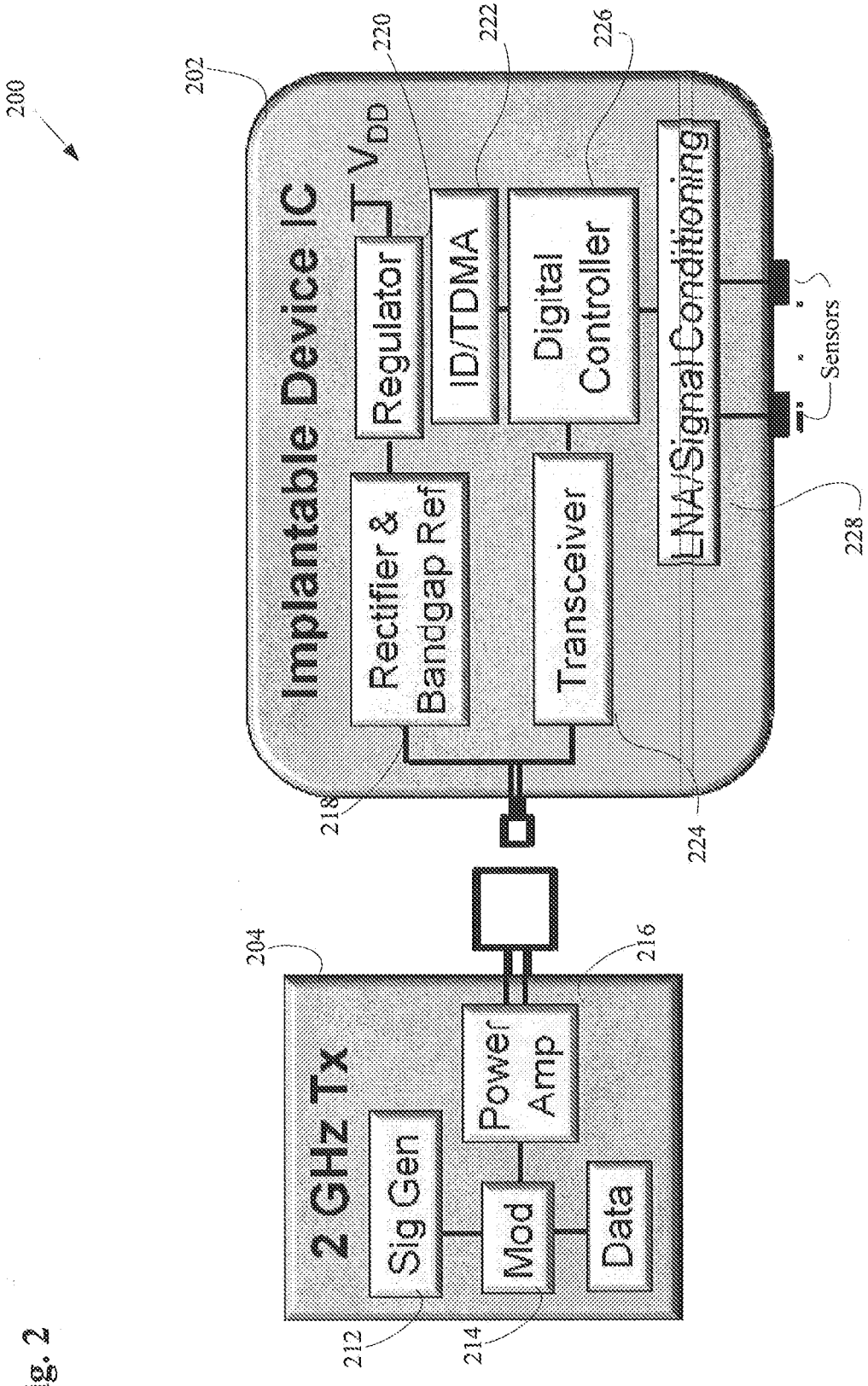
200
202
Implantable Device IC
V_{DD}
220
222
226
Regulator
ID/TDMA
Digital Controller
LNA/Signal Conditioning
Sensors
228
Rectifier & Bandgap Ref
Transceiver
218
224
204
216
2 GHz Tx
Power Amp
Sig Gen
Mod
Data
212
214

Fig. 2

Fig. 3c

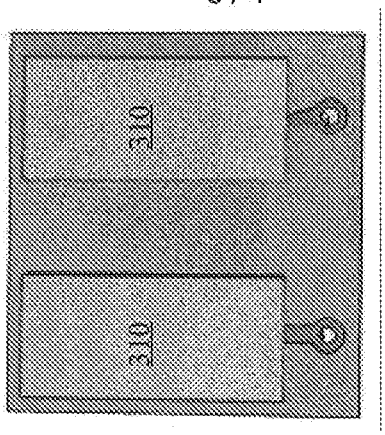

Fig. 3b

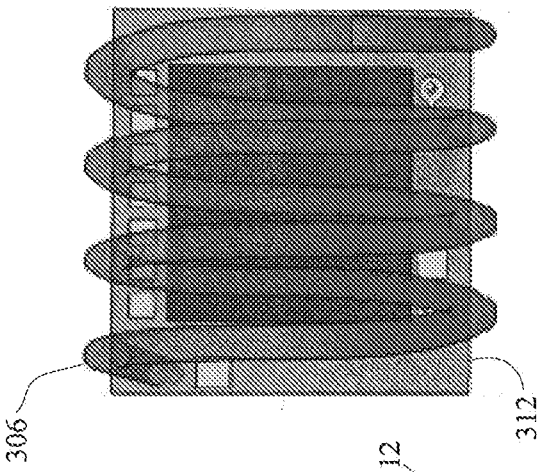

Fig. 3a

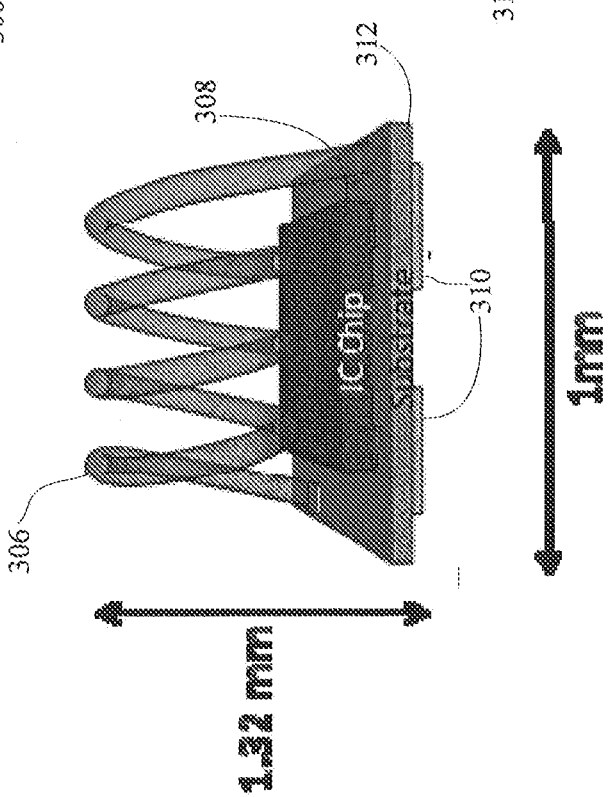

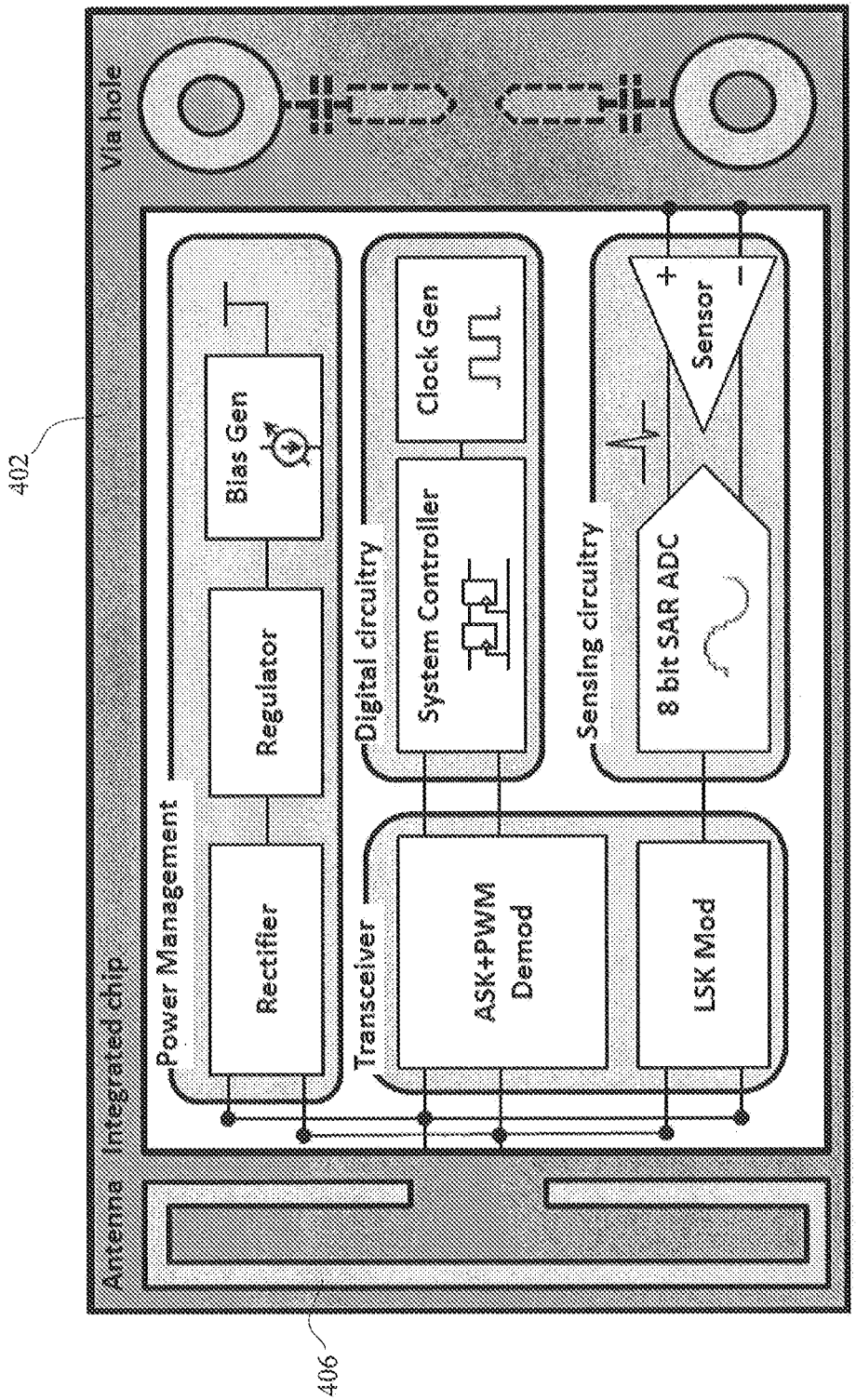
402
Via hole
Antenna
Integrated chip
Power Management
Rectifier
Regulator
Bias Gen
Digital circuitry
System Controller
Clock Gen
Sensing circuitry
8 bit SAR ADC
Sensor
+
−
Transceiver
ASK+PWM Demod
LSK Mod
406

Fig. 4

INTERNATIONAL SEARCH REPORT

International application No.
PCT/US2013/067882

A. CLASSIFICATION OF SUBJECT MATTER

A61B 5/04(2006.01)i, A61B 5/02(2006.01)i, H04B 7/24(2006.01)i, A61N 1/05(2006.01)i

According to International Patent Classification (IPC) or to both national classification and IPC

B. FIELDS SEARCHED

Minimum documentation searched (classification system followed by classification symbols)
A61B 5/04; H04W 4/22; A61B 5/1455; A61B 5/00; A61B 5/02; H04B 7/24; A61N 1/05

Documentation searched other than minimum documentation to the extent that such documents are included in the fields searched
Korean utility models and applications for utility models
Japanese utility models and applications for utility models

Electronic data base consulted during the international search (name of data base and, where practicable, search terms used)
eKOMPASS(KIPO internal) & Keywords: implantable, wireless, sensor, antenna, power, bodily parameters

C. DOCUMENTS CONSIDERED TO BE RELEVANT

Category*	Citation of document, with indication, where appropriate, of the relevant passages	Relevant to claim No.
X	US 2010-0081895 A1 (JASON MATTHEW ZAND) 01 April 2010 See abstract, paragraphs [0032]-[0038] and figures 1-8.	1-3,6-8,16-18
Y		4,5,9,10
Y	US 2007-0032734 A1 (NADER NAJAFI et al.) 08 February 2007 See abstract, paragraphs [0040]-[0044] and figures 1-6.	4,5,9,10
A		1-3,6-8,16-18
A	WO 2009-008932 A2 (WHITEHEAD INSTITUTE) 15 January 2009 See abstract, paragraphs [0003]-[0007], [0022]-[0052] and figures 6-25.	1-10,16-18
A	US 2012-0245444 A1 (BRIAN OTIS et al.) 27 September 2012 See abstract, paragraphs [0200]-[0225], [0242]-[0275] and figures 14-32.	1-10,16-18
A	US 2001-0044588 A1 (JAMES R. MAULT) 22 November 2001 See abstract, paragraphs [0060]-[0084] and figures 9-15.	1-10,16-18

☐ Further documents are listed in the continuation of Box C.

☒ See patent family annex.

* Special categories of cited documents:
"A" document defining the general state of the art which is not considered to be of particular relevance
"E" earlier application or patent but published on or after the international filing date
"L" document which may throw doubts on priority claim(s) or which is cited to establish the publication date of another citation or other special reason (as specified)
"O" document referring to an oral disclosure, use, exhibition or other means
"P" document published prior to the international filing date but later than the priority date claimed

"T" later document published after the international filing date or priority date and not in conflict with the application but cited to understand the principle or theory underlying the invention
"X" document of particular relevance; the claimed invention cannot be considered novel or cannot be considered to involve an inventive step when the document is taken alone
"Y" document of particular relevance; the claimed invention cannot be considered to involve an inventive step when the document is combined with one or more other such documents,such combination being obvious to a person skilled in the art
"&" document member of the same patent family

Date of the actual completion of the international search	Date of mailing of the international search report
21 February 2014 (21.02.2014)	**21 February 2014 (21.02.2014)**

Name and mailing address of the ISA/KR	Authorized officer
Korean Intellectual Property Office 189 Cheongsa-ro, Seo-gu, Daejeon Metropolitan City, 302-701, Republic of Korea	OH, Eung Gie
Facsimile No. +82-42-472-7140	Telephone No. +82-42-481-8744

INTERNATIONAL SEARCH REPORT

International application No.
PCT/US2013/067882

Box No. II Observations where certain claims were found unsearchable (Continuation of item 2 of first sheet)

This international search report has not been established in respect of certain claims under Article 17(2)(a) for the following reasons:

1. ☒ Claims Nos.: 11-15
because they relate to subject matter not required to be searched by this Authority, namely:
Claims 11-15 pertain to methods for treatment of the human body by therapy or surgery, as well as diagnostic methods, and thus relate to a subject matter which this International Searching Authority is not required to search under Article 17(2)(a)(i) of the PCT and Rule 39.1(iv) of the Regulations under the PCT.

2. ☐ Claims Nos.:
because they relate to parts of the international application that do not comply with the prescribed requirements to such an extent that no meaningful international search can be carried out, specifically:

3. ☐ Claims Nos.:
because they are dependent claims and are not drafted in accordance with the second and third sentences of Rule 6.4(a).

Box No. III Observations where unity of invention is lacking (Continuation of item 3 of first sheet)

This International Searching Authority found multiple inventions in this international application, as follows:

1. ☐ As all required addtional search fees were timely paid by the applicant, this international search report covers all searchable claims.

2. ☐ As all searchable claims could be searched without effort justifying an additional fees, this Authority did not invite payment of any additional fees.

3. ☐ As only some of the required additional search fees were timely paid by the applicant, this international search report covers only those claims for which fees were paid, specifically claims Nos.:

4. ☐ No required additional search fees were timely paid by the applicant. Consequently, this international search report is restricted to the invention first mentioned in the claims; it is covered by claims Nos.:

Remark on Protest

☐ The additional search fees were accompanied by the applicant's protest and, where applicable, the payment of a protest fee.
☐ The additional search fees were accompanied by the applicant's protest but the applicable protest fee was not paid within the time limit specified in the invitation.
☐ No protest accompanied the payment of additional search fees.

INTERNATIONAL SEARCH REPORT
Information on patent family members

International application No.
PCT/US2013/067882

Patent document cited in search report	Publication date	Patent family member(s)	Publication date
US 2010-0081895 A1	01/04/2010	WO 2008-076464 A2	26/06/2008
		WO 2008-076464 A3	13/11/2008
US 2007-0032734 A1	08/02/2007	US 2009-0182206 A1	16/07/2009
		US 2011-0046452 A1	24/02/2011
		US 7615010 B1	10/11/2009
		US 7686762 B1	30/03/2010
		US 8014865 B2	06/09/2011
WO 2009-008932 A2	15/01/2009	WO 2009-008932 A3	09/04/2009
US 2012-0245444 A1	27/09/2012	None	
US 2001-0044588 A1	22/11/2001	AU 2000-77155 A1	30/04/2001
		AU 2000-80076 A1	23/04/2001
		AU 2000-80156 A1	23/04/2001
		AU 2001-18017 A1	04/06/2001
		AU 2001-21129 A1	30/04/2001
		AU 2001-236500 A8	31/07/2001
		AU 2001-259831 A8	12/11/2001
		AU 2001-280615 A8	30/01/2002
		AU 2001-292986 A8	02/04/2002
		AU 2001-293226 A8	13/03/2002
		AU 2001-296456 A8	08/04/2002
		AU 2001-33311 A1	14/08/2001
		AU 2001-36500 A1	31/07/2001
		AU 2001-59278 A1	12/11/2001
		AU 2001-59831 A1	12/11/2001
		AU 2001-65022 A1	03/12/2001
		AU 2001-72009 A1	24/12/2001
		AU 2001-74942 A1	03/12/2001
		AU 2001-75290 A1	17/12/2001
		AU 2001-80615 A1	30/01/2002
		AU 2001-88902 A1	22/03/2002
		AU 2001-92986 A1	02/04/2002
		AU 2001-93226 A1	13/03/2002
		AU 2001-96456 A1	08/04/2002
		AU 2002-13176 A1	22/04/2002
		AU 2002-213176 A8	22/04/2002
		AU 2002-230759 A8	24/06/2002
		AU 2002-243370 A8	24/06/2002
		AU 2002-30759 A1	24/06/2002
		AU 2002-350213 A1	10/06/2003
		AU 2002-43370 A1	24/06/2002
		CA 2385573 A1	26/04/2001
		CA 2386811 A1	19/04/2001
		CA 2387124 A1	26/04/2001
		CA 2387137 A1	19/04/2001
		CA 2392509 A1	31/05/2001

INTERNATIONAL SEARCH REPORT
Information on patent family members

International application No.
PCT/US2013/067882

Patent document cited in search report	Publication date	Patent family member(s)	Publication date
		CA 2397133 A1	26/07/2001
		CA 2398949 A1	09/08/2001
		CA 2406841 A1	08/11/2001
		CA 2407993 A1	08/11/2001
		CA 2409501 A1	29/11/2001
		CA 2413657 A1	20/12/2001
		CA 2426681 A1	20/06/2002
		EP 0791473 A2	27/08/1997
		EP 0791473 A3	07/01/1998
		EP 0791473 B1	18/07/2001
		EP 0791638 A2	27/08/1997
		EP 0791638 A3	15/04/1998
		EP 0791638 B1	16/10/2002
		EP 1217942 A1	03/07/2002
		EP 1220637 A2	10/07/2002
		EP 1223861 A1	24/07/2002
		EP 1234265 A1	28/08/2002
		EP 1250085 A2	23/10/2002
		EP 1251773 A2	30/10/2002
		EP 1265524 A2	18/12/2002
		EP 1278455 A2	29/01/2003
		EP 1283689 A2	19/02/2003
		EP 1284642 A2	26/02/2003
		EP 1289417 A2	12/03/2003
		EP 1333755 A2	13/08/2003
		JP 09-286940 A	04/11/1997
		JP 09-286941 A	04/11/1997
		JP 2003-511143 A	25/03/2003
		JP 2003-517355 A	27/05/2003
		JP 2003-521972 A	22/07/2003
		JP 2003-531663 A	28/10/2003
		JP 2003-532214 A	28/10/2003
		JP 2003-533318 A	11/11/2003
		JP 2003-534581 A	18/11/2003
		JP 2004-503887 A	05/02/2004
		JP 2004-509652 A	02/04/2004
		JP 2004-513669 A	13/05/2004
		JP 2004-515291 A	27/05/2004
		JP 2004-537328 A	16/12/2004
		JP 3693205 B2	07/09/2005
		JP 3830219 B2	04/10/2006
		US 05948512 A	07/09/1999
		US 2001-0029340 A1	11/10/2001
		US 2001-0049470 A1	06/12/2001
		US 2002-0062069 A1	23/05/2002
		US 2002-0077766 A1	20/06/2002
		US 2002-0107433 A1	08/08/2002
		US 2002-0124017 A1	05/09/2002
		US 2002-0133378 A1	19/09/2002
		US 2003-0023182 A1	30/01/2003

INTERNATIONAL SEARCH REPORT
Information on patent family members

International application No.
PCT/US2013/067882

Patent document cited in search report	Publication date	Patent family member(s)	Publication date
		US 2003-0028120 A1	06/02/2003
		US 2003-0065257 A1	03/04/2003
		US 2003-0065273 A1	03/04/2003
		US 2003-0065274 A1	03/04/2003
		US 2003-0065275 A1	03/04/2003
		US 2003-0105407 A1	05/06/2003
		US 2003-0126593 A1	03/07/2003
		US 2003-0163321 A1	28/08/2003
		US 2003-0208409 A1	06/11/2003
		US 2003-0226695 A1	11/12/2003
		US 6232370 B1	15/05/2001
		US 6468222 B1	22/10/2002
		US 6478736 B1	12/11/2002
		US 6485138 B1	26/11/2002
		US 6513532 B2	04/02/2003
		US 6571200 B1	27/05/2003
		US 6612306 B1	02/09/2003
		US 6629934 B2	07/10/2003
		US 6790178 B1	14/09/2004
		US 6899683 B2	31/05/2005
		US 6899684 B2	31/05/2005
		US 6955650 B2	18/10/2005
		US 7392193 B2	24/06/2008
		WO 01-26535 A2	19/04/2001
		WO 01-26535 A3	25/10/2001
		WO 01-26547 A1	19/04/2001
		WO 01-28416 A1	26/04/2001
		WO 01-28495 A2	26/04/2001
		WO 01-28495 A3	11/07/2002
		WO 01-39089 A1	31/05/2001
		WO 01-52718 A2	26/07/2001
		WO 01-52718 A3	20/06/2002
		WO 01-56454 A2	09/08/2001
		WO 01-56454 A3	04/07/2002
		WO 01-82783 A2	08/11/2001
		WO 01-82783 A3	04/04/2002
		WO 01-82789 A2	08/11/2001
		WO 01-82789 A3	15/08/2002
		WO 01-89365 A2	29/11/2001
		WO 01-89365 A3	11/04/2002
		WO 01-89368 A2	29/11/2001
		WO 01-89368 A3	07/03/2002
		WO 01-93743 A2	13/12/2001
		WO 01-93743 A3	07/03/2002
		WO 01-97211 A2	20/12/2001
		WO 01-97211 A3	20/06/2002
		WO 02-05702 A2	24/01/2002
		WO 02-05702 A3	12/09/2002
		WO 02-17991 A2	07/03/2002
		WO 02-17991 A3	15/08/2002

INTERNATIONAL SEARCH REPORT
Information on patent family members

International application No.
PCT/US2013/067882

Patent document cited in search report	Publication date	Patent family member(s)	Publication date
		WO 02-21426 A1	14/03/2002
		WO 02-25228 A2	28/03/2002
		WO 02-25228 A3	06/03/2003
		WO 02-26112 A2	04/04/2002
		WO 02-26112 A3	06/09/2002
		WO 02-32037 A2	18/04/2002
		WO 02-32037 A3	22/08/2002
		WO 02-47465 A2	20/06/2002
		WO 02-47465 A3	23/01/2003
		WO 02-48662 A2	20/06/2002
		WO 02-48662 A3	30/05/2003
		WO 03-09751 A1	06/02/2003
		WO 03-45232 A2	05/06/2003
		WO 03-45232 A3	12/09/2003

专利名称(译)	无线植入式传感设备		
公开(公告)号	EP2914169A4	公开(公告)日	2016-06-15
申请号	EP2013852295	申请日	2013-10-31
[标]申请(专利权)人(译)	斯坦福大学		
申请(专利权)人(译)	THE利兰·斯坦福，齐齐哈尔大学董事会		
当前申请(专利权)人(译)	THE利兰·斯坦福，齐齐哈尔大学董事会		
[标]发明人	POON ADA SHUK YAN HU BOB S JANG JIHOON YAKOVLEV ANATOLY TANABE YUJI YEH ALEX HSU STEPHANIE MA ANDREW		
发明人	POON, ADA, SHUK YAN HU, BOB, S. JANG, JIHOON YAKOVLEV, ANATOLY TANABE, YUJI YEH, ALEX HSU, STEPHANIE MA, ANDREW		
IPC分类号	A61B5/04 A61B5/02 H04B7/24 A61N1/05 A61B5/00 A61B5/0205 A61B5/026 A61B5/03 A61B5/0476 A61B5/07 A61B5/145 A61N1/36 A61N2/00 A61N5/06 A61N7/00 H01L23/00 H04B5/00		
CPC分类号	A61B5/0031 A61B5/02055 A61B5/026 A61B5/03 A61B5/04 A61B5/0476 A61B5/076 A61B5/14503 A61B5/686 A61B5/6868 A61B5/6869 A61B5/6876 A61B2560/0219 A61B2562/0247 A61B2562/0271 H01L24/48 H01L2224/48092 H01L2924/00014 H04B5/0031 H04B5/0037 H04B5/0075 H01L2224/45099 H01L2224/45015 H01L2924/207 H01L2224/85399 H01L2224/05599 A61B5/4839 A61N1/05 A61N2/00 A61N5/0601 A61N7/00		
优先权	61/720827 2012-10-31 US		
其他公开文献	EP2914169A1		
外部链接	Espacenet		

摘要(译)

提供了一种可植入装置，其可包括任何数量的特征。在一些实施例中，该设备感应线圈天线，该线圈天线被配置为从患者体外的电源接收无线电力。该装置可包括至少一个传感器，其配置成感测患者的身体参数。该设备还可以包括电子器件，该电子器件被配置为将感测到的身体参数传送到位于患者体外的设备。还描述了使用方法。