(12) INTERNATIONAL APPLICATION PUBLISHED UNDER THE PATENT COOPERATION TREATY (PCT)

(19) World Intellectual Property Organization
International Bureau

(43) International Publication Date
4 August 2011 (04.08.2011)

PCT

(10) International Publication Number
WO 2011/091856 A1

(51) International Patent Classification:
A61B 5/0476 (2006.01) *G06F 19/00* (2011.01)
A61B 5/00 (2006.01)

(21) International Application Number:
PCT/EP2010/051150

(22) International Filing Date:
1 February 2010 (01.02.2010)

(25) Filing Language: English

(26) Publication Language: English

(71) Applicant *(for all designated States except US)*: **WIDEX A/S** [—/DK]; Nymoellevej 6, DK-3540 Lynge (DK).

(72) Inventors; and
(75) Inventors/Applicants *(for US only)*: **KIDMOSE, Preben** [DK/DK]; Myrholmen 24, DK-2760 Maalov (DK). **WESTERMANN, Søren Erik** [DK/DK]; Gl. Strandvej 237, DK-3050 Humlebak (DK).

(81) Designated States *(unless otherwise indicated, for every kind of national protection available)*: AE, AG, AL, AM, AO, AT, AU, AZ, BA, BB, BG, BH, BR, BW, BY, BZ, CA, CH, CL, CN, CO, CR, CU, CZ, DE, DK, DM, DO, DZ, EC, EE, EG, ES, FI, GB, GD, GE, GH, GM, GT, HN, HR, HU, ID, IL, IN, IS, JP, KE, KG, KM, KN, KP, KR, KZ, LA, LC, LK, LR, LS, LT, LU, LY, MA, MD, ME, MG, MK, MN, MW, MX, MY, MZ, NA, NG, NI, NO, NZ, OM, PE, PG, PH, PL, PT, RO, RS, RU, SC, SD, SE, SG, SK, SL, SM, ST, SV, SY, TH, TJ, TM, TN, TR, TT, TZ, UA, UG, US, UZ, VC, VN, ZA, ZM, ZW.

(84) Designated States *(unless otherwise indicated, for every kind of regional protection available)*: ARIPO (BW, GH, GM, KE, LS, MW, MZ, NA, SD, SL, SZ, TZ, UG, ZM, ZW), Eurasian (AM, AZ, BY, KG, KZ, MD, RU, TJ, TM), European (AT, BE, BG, CH, CY, CZ, DE, DK, EE, ES, FI, FR, GB, GR, HR, HU, IE, IS, IT, LT, LU, LV, MC, MK, MT, NL, NO, PL, PT, RO, SE, SI, SK, SM, TR), OAPI (BF, BJ, CF, CG, CI, CM, GA, GN, GQ, GW, ML, MR, NE, SN, TD, TG).

Published:

— *with international search report (Art. 21(3))*

(54) Title: PORTABLE EEG MONITOR SYSTEM WITH WIRELESS COMMUNICATION

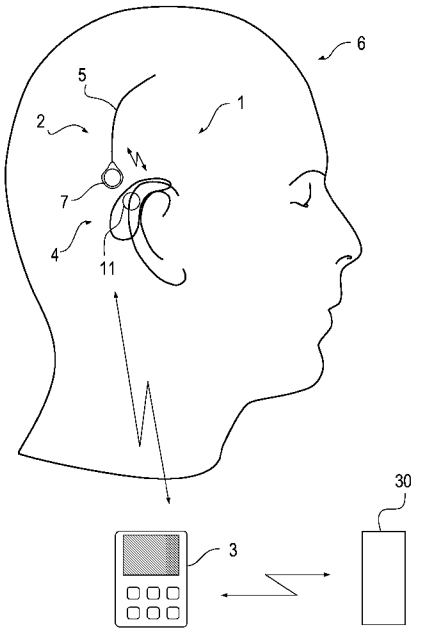

Fig. 1

(57) Abstract: A system for remote surveillance of an EEG signal of a person susceptible of having a hypoglycemic seizure, comprising an EEG sensor part (2) with electrodes (5) for measuring one or more EEG signals from the person, and comprising a processing unit (4) adapted to be removable arranged at the ear of said person, having EEG signal processing means (13) for analyzing the EEG signal, where the signal processing means are adapted for, based on the EEG signal, identifying or predicting a hypoglycemic seizure in the person. The processing part (4) comprises decision means for deciding, based on said analyzed EEG signal, when an alarm or information must be provided. The system comprise a first connection (12) between the EEG sensor part (2) and the processing unit (4), adapted for transmitting an EEG signal from the implantable EEG sensor to the processing unit. The system comprise an external part (3) adapted to receive wirelessly an alarm from the processing part, where the external part is adapted to forward an alarm to a care giver. The system comprise a second connection (20) between the processing unit and the external part, this second connection is wireless.

WO 2011/091856 A1

Portable EEG monitor system with wireless communication

The present invention relates to a system for providing an alarm of an imminent seizure of a person, where the system is based on surveillance of the electroencephalography (EEG) signal of the person. More specifically the invention relates to a system for remote surveillance of an EEG signal of a person susceptible of having a hypoglycemic seizure, where the system comprises an EEG sensor having electrodes for measuring one or more EEG signals from said person. The system further comprises a processing unit, having EEG signal processing means for analyzing the EEG signal, said signal processing means being adapted for, based on the EEG signal, identifying or predicting a hypoglycemic seizure, in said person, said processing part comprising decision means for deciding, based on said analyzed EEG signal, when an alarm or information must be provided.

For persons with diabetes accurate control of blood sugar concentration is important. The level should not be too high in order to limit the risk of long term effects of diabetes. The blood sugar level should also not be too low, since this might lead to hypoglycemia, where the person becomes absent and may become unconscious. Hypoglycemic attacks may be fatal. Often persons with diabetes have the problem that they will not feel any warning before the blood sugar concentration has fallen to a level where a hypoglycemic attack occurs. This phenomenon is known as hypoglycemic unawareness. The risk of an attack therefore often limits the possible activities of the people concerned, which furthermore decreases their quality of life. Attacks can be prevented in a simple way, e.g. by consuming appropriate food when glucose values become critically low. The number of people in the risk group is approximately 10 million.

WO-A1-2006066577 discloses an apparatus for prediction and warning of hypoglycemic attacks where an implanted unit only operates as an interface unit with a low power draw, which gathers EEG signals from one or more electrodes and transmits them wirelessly through the skin to an external unit. The external unit contains the

more power demanding components including the signal processing unit and the alarm signal device. In this case the alarm may be an acoustic signal.

WO-A1-2006066577 further discloses an apparatus for prediction and warning of hypoglycemic attacks where an implanted unit contains both signal processor, alarm device, a rechargeable battery that is charged wirelessly through the skin by an external unit and a wireless communication circuit that allows the implanted unit to transfer data to the external unit or one or more substituting external units.

WO-A2-2007047667 discloses an apparatus containing a bioelectric measurement system, a remote monitoring system and mobile devices. The bioelectric measurement system is utilized in connection with a patient undergoing medical surveillance to measure bioelectric signal patterns associated with EEG and EMG readings. The remote monitoring system and the mobile devices are configured to receive transmissions of bioelectric related data from the bioelectric measurement system. If an emergency characteristic is detected, the remote monitoring system may be directed to transmit the appropriate data and/or predefined notification alarms and messages to a medically enabled mobile device.

WO-A2-2008092133 discloses a system for monitoring a subject and its susceptibility for having a seizure. The system contains an implanted assembly and an external assembly. The external assembly may be used to provide a warning instruction. The output from the external assembly may be visual, audio, tactile (e.g. vibratory), or some combination thereof. The disclosed systems can also include an alert that is configured to indicate that there is a communication error between the implanted assembly and the external assembly. The alert can be a visible alert, an audible alert, a tactile alert, or any combination thereof. The components of the external assembly may be integrated within a housing of a typical consumer electronics device such as an MP3 player or cellular phone. The radio-frequency used to transfer data between the implantable assembly and the external assembly is at a frequency typically between 13.56 MHz and 10 GHz.

WO-A2-2007150003 discloses a system for ambulatory, long term monitoring of a physiological signal from a patient. At least part of the system may be implanted within the patient. Brain activity signals are sampled from the patient with an externally powered leadless implanted device and transmitted to a handheld patient communication device for further processing. The external device will typically include a user interface. The user interface may be used to provide a warning signal when the implanted device is out of communication range.

A large part of people with diabetes are elderly persons, of which some cannot always be trusted to take the necessary actions themselves on an alarm of an imminent hypoglycemic attack. The same may be the case for children having diabetes. For persons who may need assistance in preventing an imminent hypoglycemic attack it is necessary to have a system which can also transmit an alarm to a helper, e.g. caregiver, who is not necessarily in the same room. In the case of children the helper would typically be a parent. In order to avoid errors it is essential that the handling of such a system is as simple as possible, and that it is easy to control the system. Simple handling includes that intervals between changing or recharging batteries should be as long as possible. Easy control of the system includes that it should be easy to check correct positioning of the part arranged on the skin surface of the body. Simple handling and easy control is especially important in a nursing home where one helper or caregiver may need to watch out for more than one alarm system related to different persons and at the same time be doing a number of other tasks.

The known systems for warning of an imminent hypoglycemic attack do not adequately fulfill the demands for obtaining a system which can warn a helper wirelessly with an easily handled and controlled system.

This problem has been solved by a system for remote surveillance of an EEG signal of a person susceptible of having a hypoglycemic seizure, where the system comprises an EEG sensor having electrodes for measuring one or more EEG signals from said person. The system further comprise a processing unit adapted to be removable arranged at the ear of said person, having EEG signal processing means for analyzing

the EEG signal, said signal processing means being adapted for, based on the EEG signal, identifying or predicting a hypoglycemic seizure, in said person, said processing part comprising decision means for deciding, based on said analyzed EEG signal, when an alarm or information must be provided. The system also comprises alarm means for providing the person with an alarm. The system further comprise a first connection between the EEG sensor part and the processing unit, adapted for transmitting EEG signal from the EEG sensor part to the processing unit. The system further comprises an external part adapted to receive wirelessly an alarm from said processing part, said external part being adapted to forward an alarm to a helper, and the system comprises a second and wireless connection between the processing unit and the external part.

This solution has the advantage that correct positioning of the processing unit is easy to control if the housing of the control unit is arranged at the ear. It can directly be seen if it is correctly positioned. Furthermore, the part of the system arranged on the persons head can be made relatively small and of low weight.

It is also an advantage that the signal processing is performed directly in the processing unit. Thereby the EEG signal as such does not need to be transmitted to the external part. Only alarms or other specific information needs to be transmitted. This saves power for transmission.

In a preferred embodiment of the system for remote surveillance of an EEG signal the system comprises alarm means for providing the person with an alarm, such that the system is capable of giving a direct alarm to the person under surveillance for hypoglycemia. The alarm means could be a loudspeaker or a mechanical vibrator, and could be arranged in the processing unit. One advantage of both giving a direct alarm to the person and sending an alarm wirelessly to a helper, could be in situations where the person is in a period of training in order to learn to handle an alarm on his or her own. During such a period where the person may be getting used to the system, the alarm to the helper or caregiver may be an extra safety precaution to avoid hypoglycemic attacks.

Another advantage of a system capable of giving a wireless alarm to a helper as well as a direct alarm to the person in risk of hypoglycemia is that it will not be necessary to change the system as the needs for direct alarm and wireless alarm to a helper changes. Such a change could be that a child learns to handle the alarm on its own and therefore no longer needs the backup from a parent. An older person may also initially be able to handle an alarm, but may at some point in time need the safety of a helper who also gets the alarm. Logistically it will be simpler, and thereby cheaper, to manufacture and distribute one system capable of doing both, instead of two different systems.

A further advantage is that the possibility for both a direct alarm to the person and for the wireless alarm to the care giver implies that the same version or model of the EEG sensor and the processing unit can be applied both when only an alarm to the person is necessary and also when only an alarm to the care giver is necessary. Thereby the necessary number of different versions or models which need to be manufactured can be reduced.

In a preferred embodiment of the system for remote surveillance of an EEG signal the EEG sensor part is adapted for implantation on the head. This implantation may be subcutaneous or intra cranial. The advantage is that a better contact between electrodes and tissue can be obtained. A subcutaneous EEG sensor can also be implanted relatively easy. Alternatively, the EEG sensor part could be arranged in the ear canal with the electrodes in contact with the tissue in the ear canal. Thereby any kind of surgery is avoided, but the contact between the electrodes and the tissue is less stable.

In a further embodiment of the system with an implanted EEG sensor part the first connection is wireless and the EEG sensor part comprises a first coil and the processing unit comprises a second coil. The first wireless connection is based on an inductive coupling between the first and the second coils, and the first wireless connection is adapted for transferring power from the processing unit to the implantable EEG sensor part. This facilitates that the implanted EEG sensor part can be driven without a battery since it is powered from the processing unit.

In a preferred embodiment of the system the described external part is adapted for sending an alarm or information to a remote part. This has the advantage that the distance between the helper and the person in risk of a hypoglycemic seizure can be larger.

In a further embodiment of the system the remote part is a mobile phone, and said alarm or information is send over the standard mobile phone network. This has the advantage that the care giver does not need to carry around any extra equipment, and can easily survey several persons by the use of the same mobile phone.

In a further embodiment of the system the remote part is set up to send instructions to the external part or to the processing unit. This could facilitate easy tracking of the external part or to the processing unit, in case one or both of these are missing, by triggering them to make a sound. It could also trigger one or both of them to return specific information.

In a further embodiment of the system the external part is provided with at least one further function selected from the group: remote control, data logger, streaming of data to the processing unit, terminal for entering information about the handling of an alarm. If the person can apply the external part for one or more of these purposes it will increase the functionality of the system. A remote control could be applied for selecting between specific programs e.g. depending on the physical status of the person such as sleeping, awake or doing exercise. A data logger could be applied for logging larger amount of data, e.g. if it is relevant in a period to log the EEG signal, the processing unit could be set up to stream the signal to the external part which can be supplied with more data logging capacity than the more limited spacing of the processing unit would facilitate. The external part could be used for streaming data, such as music or radio, to the processing unit from where it could be played to the person through a loudspeaker forming the alarm means. The external part may be applied as a terminal, such as a keyboard, for the system to verify the mental status of the person. If an alarm has been given, the system may ask the person to respond that the necessary steps, such as eating or drinking, to avoid hypoglycemia have been taken. Further to this, the system could

be set up for checking if the person has signs on hypoglycemia. This could be by asking the person to enter a code or the result of a simple calculation on the external part.

In a further embodiment of the system the second wireless connection between the processing unit and the external part is based on an inductive link. The antennae for this may be smaller compared to antennae for traditional radio communication.

In a second aspect of the invention it is also directed to a method for EEG surveillance, detecting and supplying an alarm of an imminent hypoglycemic seizure in a person.

Embodiments of the invention will now be explained in further detail with reference to the figures.

Figure 1 illustrates an embodiment where the processing unit of the system is prepared to be arranged behind the ear, and the EEG sensor part is prepared to be arranged subcutaneously in the area behind the ear.

Figure 2 illustrates schematically a system for remote surveillance of an EEG signal, based on an implanted EEG sensor part.

Figure 3 illustrates a flowchart for a method for surveillance of an EEG signal.

Figure 1 shows the head 6 of a person provided with a system 1 for remote surveillance of an EEG signal. The person is being monitored wearing the implantable EEG sensor 2 and the processing unit 4. The two units 2, 4 are adapted to be in wireless communication through the skin of the person. The implanted EEG sensor 2 comprises electrodes 5. The sensor will have at least two electrodes, which may be arranged as separate electrodes along the same wire 5 as illustrated in figure 1. One wire comprising all electrodes associated with respective conductors may facilitate the implantation process. The EEG sensor is provided with an electronic module 7.

The processing unit 4 is arranged at the ear of the person of whom the EEG signal is being monitored. Preferably, the processing unit 4 is arranged in a housing behind the ear as a behind the ear hearing aid. This also facilitates a position as close as possible to the implanted part, which is important for the wireless communication and power transfer through the skin. With the position behind the ear of the housing, means for fixation is also necessary. For this purpose part of a wire or sound tubing also applied for conveying the sound from a hearing aid into the ear canal may be used. This means that this wire or sound tubing should be relatively stiff, i.e. adapted for keeping the original given shape during use. Further to this purpose the wire or sound tubing can also be used for providing a sound alarm or message to the user. In the case of a wire the loudspeaker or receiver could be arranged within or close to the ear canal. In the case of a sound tubing the loudspeaker or receiver could be arranged in the housing of the processing unit.

Figure 1 further illustrates an external part 3 and a remote part 30.

Figure 2 illustrates main components of an embodiment of a system for surveillance of an EEG signal.

The wireless connection 12 between the implantable EEG sensor 2 and the processing unit 4 is based on an inductive coupling between a coil 10 in the sensor and a coil 11 in the processing unit. This wireless connection 12 is applied to transfer power from the processing unit 4 to the implantable EEG sensor 2. Thereby, it is possible to operate the EEG sensor without a battery. The two coils 10, 11 should be closely aligned on each side of the skin barrier in order to achieve an efficient power transfer. The center axis of one coil should preferably continue through the center axis of the other coil, or the two center axes should be arranged close to each other. This close arrangement is ensured when arranging the processing unit. The EEG sensor must be placed such during implantation that it will be easy to align the two coils, i.e. the EEG sensor should be arranged in a position where the coil 10 is at a position where it will be easy to arrange the coil of the processing unit in alignment.

In case of insufficient alignment between the two coils 10, 11 for obtaining a satisfactory power and data transmission, this can be detected by the processing unit and a notification can be sent to the external device.

The wireless connection based on inductive coupling is also applied for transmission of the EEG signal from the implanted EEG sensor 2 to the processing unit 4. This may be done by varying the load on the coil 10 in the EEG sensor. The changes in load in the EEG sensor influence the power load on the coil 11 in the processing unit. In this way an EEG signal can be transmitted from the EEG sensor to the processing unit.

The inductive coupling can be based on frequencies within a wide range. It could be a frequency around 125 kHz, which is also applied in RFID systems. Much higher frequencies may also be applied. This could be a frequency in the range 0.5 – 2 MHz. But also frequencies in the range around 10 MHz can be applied. The advantage of a higher frequency is that the antennas can be made smaller. Unfortunately, higher frequency will also lead to an increase in power consumption. These tendencies apply to inductive coupling as well as to traditional radio communication. For an inductive coupling where power is to be transferred, the coils must be in the near field of each other in order to obtain an efficient power transfer. In practice this sets the limit for how small the coils can be.

As an example on antenna size for a 1 MHz wireless connection based on inductive coupling, the coil 10 for the implanted EEG sensor can be made with an outer diameter in the range10 – 18 mm, preferably 12 – 16 mm and more preferably about 14 mm and with a height in the direction perpendicular to the plane defining the outer circumference of the circular coil of 0.5 – 1.5 mm, preferably about 1 mm. A height, or thickness, of approximately 1 mm for an implant arranged subcutaneous between the scull and the scalp should be acceptable to most people. The corresponding coil 11 in the processing unit can have an outer diameter in the range 4 – 10 mm, preferably in the range 6 – 8 mm and a height in the range 4 – 8 mm, preferably about 6 mm. Such dimensions will be suitable to fit into a housing for the processing unit equivalent to the size of a small hearing aid. Such coil sizes will be sufficient for the power transfer from

the processing unit to the implanted EEG sensor, and for the signal to be transferred from the EEG sensor to the processing unit.

The processing unit 4 comprises means for transferring power through the inductive coupling via the two coils 10, 11, and means for receiving the EEG signal obtained by the EEG sensor 2. The processing unit 4 comprises a battery (not shown) for power supply to the components of the processing unit as well as power to be transferred to the EEG sensor.

The processing unit 4 also comprises an EEG signal processor 13 for analyzing the EEG signal according to predefined algorithms in order to identify an imminent seizure.

The processing unit 4 comprises a memory, such as an EEPROM 16, for logging EEG signals, specific events or alarms.

The processing unit 4 comprises an alarm device, e.g. in the form of a loudspeaker 17. The alarm device may be connected to the EEG signal processor 13, e.g. through an amplifier. In the case where the alarm device is a loudspeaker, this may be applied for replaying speech messages stored in the memory. Such messages could ask the person being monitored to perform specific acts in order to avoid a seizure. The alarm device could also be a vibrator, which in case of an alarm vibrates, e.g. against the skin to notify the person. A vibrator could also be placed subcutaneous in connection with, or as part of the implanted EEG sensor. The person would still be able to feel any vibration.

The different components of the processing unit 4 may be connected through a data bus 15.

The processing unit 4 further comprises a radio 14 with an antenna 18. This is for communication with an external part 3 through a second wireless connection 20. This radio and antenna is set up for minimum power consumption. Therefore, the radio will

be adapted for short range transmission to the external part 3. The antenna must also be relatively small in order to be fit in the housing of the processing unit. Both purposes can be achieved by application of an inductive antenna, i.e. a coil. The frequency of such an inductive antenna could be around 10 MHz. The advantage of an inductive antenna is the low power consumption in the receiver and transmitter circuit. The disadvantage is the short range the signal can be transmitted since the signal intensity declines with the distance in the power of three.

As an example on antenna size for a 10 MHz wireless connection based on inductive coupling between the processing unit 4 and the external part 3, a coil antenna 18 for the processing unit can be made with an outer diameter in the range 1 – 2 mm, preferably about 1.5 mm and with a height in the direction perpendicular to the plane defining the outer circumference of the circular coil of 4 – 8 mm, preferably about 6 mm. Such dimensions make the coil feasible for arrangement in the housing for the processing unit. The corresponding coil antenna 21 in the external part can have an outer diameter in the range 3 – 8 mm, preferably in the range 5 – 6 mm and a height in the range 20 – 50 mm, preferably in the range 30 – 40 mm.

Therefore the external part 3 to which the processing unit 4 transmits should be arranged in relatively close range of the person equipped with the EEG sensor 2 and the processing unit 4. This means that the external part should be in the same room, or maybe in the person's pocket, e.g. preferably within a range of 4 m, more preferably within 3 m, and even more preferably within 2 m.

The communication in the second wireless connection 20 between the processing unit and the external part could also be performed by a standard radio. While the communication in the first wireless connection between the implanted EEG sensor and the processing unit is more or less continuous, the communication in the second wireless connection between the processing unit and the external part is more sparse, since the signal processing of the EEG signal is performed in the processing unit, and the processing unit is only sending to the external part at specific occasions, such as in the case of a detected imminent seizure or in the case of specific maintenance related

information such as low charge on battery or brief confirmation messages that the system is functioning properly. This means that only a small bandwidth is necessary for the second wireless connection due to the relatively small amount of data to be transferred. Thereby this connection will be less sensitive to noise from the surroundings.

The external part 3 comprises a short range radio 22 for communication with the processing unit 4 through an antenna 21. The external part 3 further comprises a longer range radio 25 for communication with a remote part 30. The external part 3 comprises a memory 24 to which data from the processing unit 4 can be transferred. The memory capacity in the external part 3 could be considerably larger than the memory capacity in the processing unit. The external part 3 further comprises a microcontroller 23 for handling the communication with the processing unit 4 as well as with the remote part 30. Since the external part 3 does not have to be carried directly on the body, it can be heavier and larger than the processing unit 4, and can, therefore, comprise a battery (not shown) which can have a considerably larger capacity than the battery of the processing unit 4. Thereby, the radio communication with the remote unit can be of a more power demanding type, and thus provide communication over a longer distance.

The housing of the processing unit could comprise transducers for other measurements of the actual conditions of the person being monitored. This could be temperature, skin humidity, pulse etc.

The external part 3 may also comprise other features in addition to functioning as a relay device between the processing unit 4 and a remote part 30. Such other features could be to function as a remote control in cases where a remote control is necessary. This could be in versions where different programs are possible, or for the person to respond to an alarm. Another feature could be a further alarm device, preferably of an acoustic type, for warning people close to the person with the EEG surveillance.

The remote part 30 must be in communication with the external part over a longer distance, at least to a different room in a building. This means that the communication

link 27 between the radio 32 and antenna 31 in the remote part 30 and the radio 25 and the antenna 26 in the external part should be through a standard radio connection and not an inductive type. Any radio communication for a range of e.g. 10 meter or more could in principle be used for the purpose.

One possibility would be to apply the mobile telephone network for the communication link 27. By doing this the remote part 30 could be a standard mobile telephone e.g. supplied with software for giving a warning in a predefined form. Preferably, the remote part 30 has software and/or a microcontroller 33 adapted for providing information on how to handle the alarm. The illustrated remote part 30 in figure 2 has alarm means in form of a loudspeaker 34.

Data other than alarms may also be transmitted to the remote part. This could be data or information on incidences where an alarm has almost been triggered but was prevented. Prevention of an alarm could take place if the person under EEG surveillance was eating or drinking, thereby increasing the blood sugar concentration, just before the alarm would have been triggered.

It would also be relevant to transmit information on the operational condition of the EEG sensor, processing unit or external part to the care giver. This could be low battery charge. Also information on loss of contact between the processing unit and the EEG sensor is important to transmit to the remote part. Such loss of contact may be due to removal of the processing unit, or that its position has been changed such that the coils are no longer aligned. Also data indicating the physical status of the person, e.g. sleeping or awake, could be transferred. Obviously, all types of data transferred should only happen with the consent of the person.

Figure 3 is a flow chart of the steps in a method for wireless surveillance for detecting and supplying an alarm concerning an imminent hypoglycemic seizure. This method is based preferably based on the embodiment with an implanted EEG sensor. The first step in the method is continuously measuring EEG signals of a person susceptible of having a hypoglycemic seizure. The EEG signals are measured by the EEG sensor 2,

which is preferably implanted subcutaneous on the head of the person, preferably behind the ear. The EEG sensor is provided with electrodes 5 for measuring one or more EEG signals, and comprises a coil for wireless communication. The measured EEG signal is transmitted from the EEG sensor to the processing unit through the wireless connection, based on inductive coupling, between the first coil 10 of the EEG sensor and the second coil 11 of the processing unit 4. Furthermore, power is transmitted from the processing unit to the implantable EEG sensor, through the same inductive coupling. In a next step the EEG signal is being processed in the processing unit having EEG signal processing means for analyzing the EEG signal. Identification or prediction of an imminent hypoglycemic seizure is performed in the signal processing means, based on the EEG signal. Based on this identification or prediction a decision is made on whether or not an alarm, or other information, must be provided to the helper or the person being monitored. In a further step the processing unit transmits an alarm to an external part through a second wireless connection established between the processing unit and the external part. The external part may provide an alarm to a care giver. In a preferred embodiment the external part transmits the alarm to a remote part which provides the alarm to the care giver.

Claims

1. A system for remote surveillance of an EEG signal of a person susceptible of having a hypoglycemic seizure, said system comprising
   - an EEG sensor part having electrodes for measuring one or more EEG signals from said person,
   - a processing unit adapted to be removable arranged at the ear of said person, having EEG signal processing means for analyzing the EEG signal, said signal processing means being adapted for, based on the EEG signal, identifying or predicting a hypoglycemic seizure in said person, said processing part comprising decision means for deciding, based on said analyzed EEG signal, when an alarm or information must be provided,
   - a first connection between the EEG sensor part and the processing unit, adapted for transmitting an EEG signal from the EEG sensor part to the processing unit,
   - an external part adapted to receive wirelessly an alarm from said processing part, said external part being adapted to forward an alarm to a care giver, and
   - a second connection between the processing unit and the external part, said second connection being wireless.

2. A system according to claim 1, comprising alarm means for providing said person with an alarm.

3. A system according to claim 1 or 2, wherein said EEG sensor part being adapted for implantation in the head, preferably subcutaneous implantation.

4. A system according to claim 1, 2 or 3, wherein said first connection is wireless and said EEG sensor part comprises a first coil and said processing unit comprises a second coil, wherein said first wireless connection being based on an inductive coupling between said first and said second coils and being

adapted for transferring power from the processing unit to the implantable EEG sensor part.

5. A system according to any one of the previous claims, wherein said external part is adapted for sending an alarm or information to a remote part.

6. A system according to claim 5, wherein said remote part is a mobile phone, and said alarm or information is sent over the standard mobile phone network.

7. A system according to claim 5 or 6, wherein said remote part is set up to send instructions to said external part or to said processing unit.

8. A system according to any one of the previous claims, wherein said external part is provided with at least one further function selected from the group: remote control, data logger, streaming of data to the processing unit, terminal for entering information about the handling of an alarm.

9. A system according to any one of the previous claims, wherein said second wireless connection between the processing unit and the external part is based on an inductive link.

10. A method for EEG surveillance, for providing an alarm in the event of a risk of an imminent hypoglycemic seizure in a person, said method comprising the steps of
    - measuring EEG signals of said person by an EEG sensor part, said EEG sensor having electrodes for measuring one or more EEG signals,
    - transmitting the measured EEG signal from the EEG sensor part to a processing unit through a first connection between the EEG sensor part and the processing unit,
    - processing the EEG signal in said processing unit having EEG signal processing means for analyzing the EEG signal, said signal processing

means being adapted for, based on the EEG signal, identifying or predicting a hypoglycemic seizure in said person, said processing unit comprising decision means for deciding, based on said analyzed EEG signal, when an alarm must be provided, and

- transmitting an alarm from said processing unit to an external part through a second connection established wirelessly between the processing unit and the external part.

11. A method according to claim 10, wherein said first connection being wireless and said EEG sensor part has been implanted subcutaneous on the head of the person.

12. A method according to claim 10 or 11, wherein said first connection is wireless and said EEG sensor part comprises a first coil and said processing unit comprises a second coil, wherein said first wireless connection being based on an inductive coupling between said first and said second coils and is transferring power from the processing unit to the implantable EEG sensor part.

13. A method according to claim 10, 11 or 12, further comprising the step of the external part transmitting an alarm to a remote part.

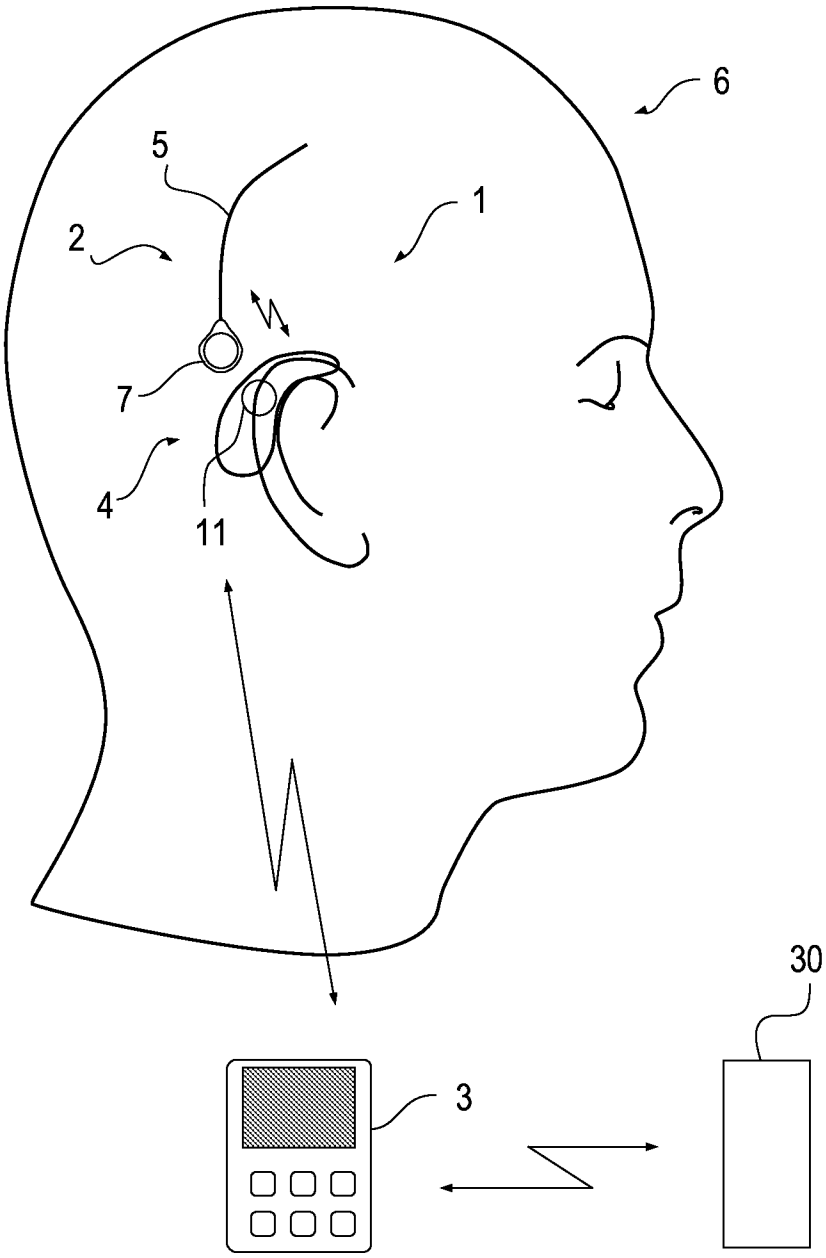

Fig. 1

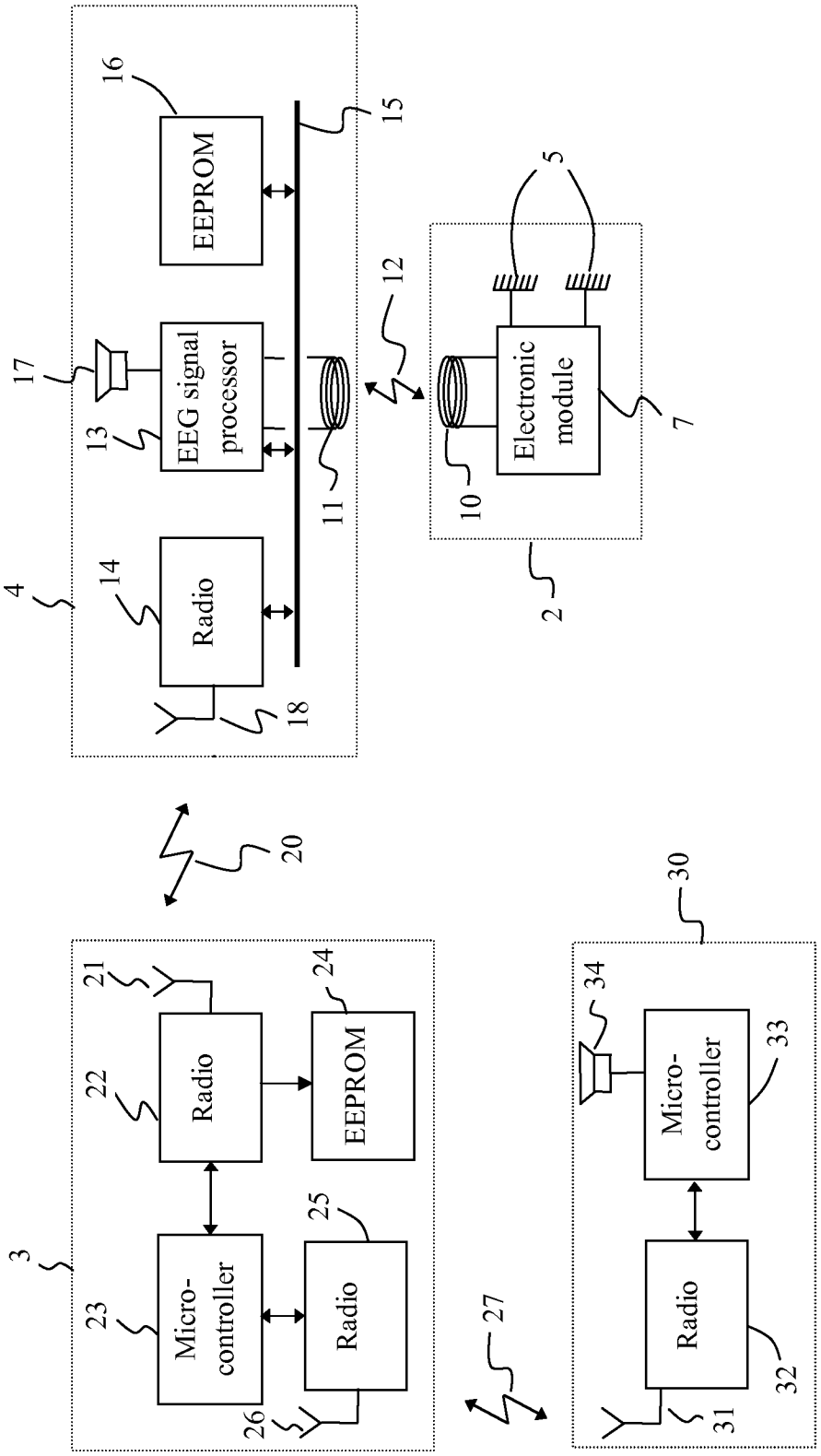
EEPROM
EEG signal processor
Radio
Electronic module
Micro-controller
Radio
EEPROM
Radio
Micro-controller
Radio
2
3
4
5
7
10
11
12
13
14
15
16
17
18
20
21
22
23
24
25
26
27
30
31
32
33
34

Fig. 2

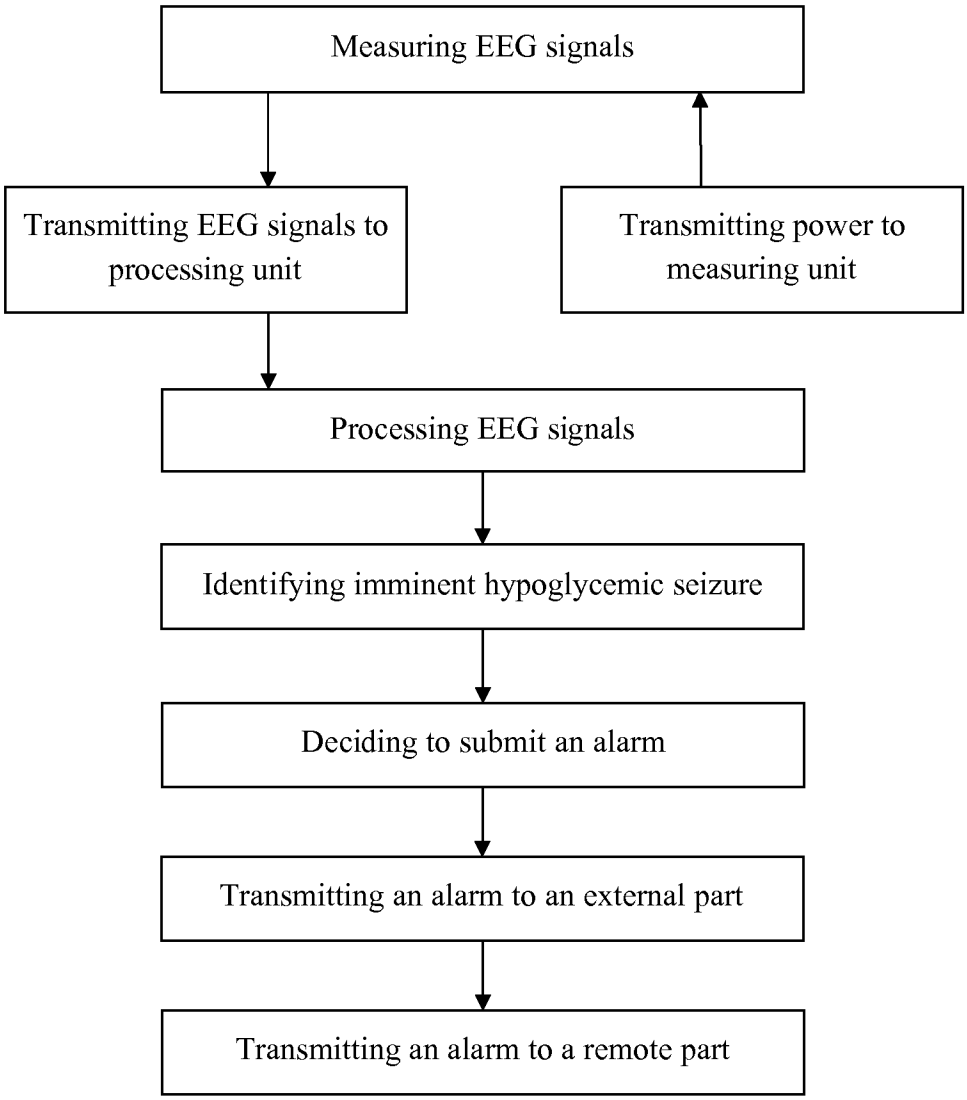
Measuring EEG signals
Transmitting EEG signals to processing unit
Transmitting power to measuring unit
Processing EEG signals
Identifying imminent hypoglycemic seizure
Deciding to submit an alarm
Transmitting an alarm to an external part
Transmitting an alarm to a remote part

Fig. 3

INTERNATIONAL SEARCH REPORT

International application No
PCT/EP2010/051150

A. CLASSIFICATION OF SUBJECT MATTER
INV. A61B5/0476 A61B5/00 G06F19/00
ADD.

According to International Patent Classification (IPC) or to both national classification and IPC

B. FIELDS SEARCHED

Minimum documentation searched (classification system followed by classification symbols)
A61B

Documentation searched other than minimum documentation to the extent that such documents are included in the fields searched

Electronic data base consulted during the international search (name of data base and, where practical, search terms used)

EPO-Internal

C. DOCUMENTS CONSIDERED TO BE RELEVANT

Category*	Citation of document, with indication, where appropriate, of the relevant passages	Relevant to claim No.
X	US 2007/197881 A1 (WOLF JAMES L [US] ET AL) 23 August 2007 (2007-08-23) figures 1,3,4 paragraph [0017] - paragraph [0022] paragraph [0053] - paragraph [0062] paragraph [0062] claims 1,4 -----	1-13
A	US 2009/062682 A1 (BLAND MICHAEL [US] ET AL) 5 March 2009 (2009-03-05) paragraph [0040] - paragraph [0080] figure 15 -----	1-13
A	US 2008/027348 A1 (HARRIS JOHN F [US] ET AL) 31 January 2008 (2008-01-31) paragraph [0064] - paragraph [0105] figures 1a,3a -----	1-13
	-/--	

[X] Further documents are listed in the continuation of Box C.

[X] See patent family annex.

* Special categories of cited documents :

"A" document defining the general state of the art which is not considered to be of particular relevance

"E" earlier document but published on or after the international filing date

"L" document which may throw doubts on priority claim(s) or which is cited to establish the publication date of another citation or other special reason (as specified)

"O" document referring to an oral disclosure, use, exhibition or other means

"P" document published prior to the international filing date but later than the priority date claimed

"T" later document published after the international filing date or priority date and not in conflict with the application but cited to understand the principle or theory underlying the invention

"X" document of particular relevance; the claimed invention cannot be considered novel or cannot be considered to involve an inventive step when the document is taken alone

"Y" document of particular relevance; the claimed invention cannot be considered to involve an inventive step when the document is combined with one or more other such documents, such combination being obvious to a person skilled in the art.

"&" document member of the same patent family

Date of the actual completion of the international search	Date of mailing of the international search report
7 April 2010	23/04/2010

Name and mailing address of the ISA/	Authorized officer
European Patent Office, P.B. 5818 Patentlaan 2 NL - 2280 HV Rijswijk Tel. (+31-70) 340-2040, Fax: (+31-70) 340-3016	De la Hera, Germán

INTERNATIONAL SEARCH REPORT

International application No
PCT/EP2010/051150

C(Continuation). DOCUMENTS CONSIDERED TO BE RELEVANT

Category*	Citation of document, with indication, where appropriate, of the relevant passages	Relevant to claim No.
A	US 2009/287107 A1 (BECK-NIELSEN HENNING [DK] ET AL) 19 November 2009 (2009-11-19) paragraphs [0029], [0051], [0052] figure 1	1-13
A	US 2007/149952 A1 (BLAND MIKE [US] ET AL) 28 June 2007 (2007-06-28) figures 1a,2 paragraphs [0031], [0045], [0058], [0018], [0055], [0052], [0069]	1-13
A	US 2009/062678 A1 (BECK-NIELSEN HENNING [DK]) 5 March 2009 (2009-03-05) paragraph [0051] - paragraph [0072] figure 2	1-13
A	WO 2007/047667 A2 (SARNOFF CORP [US]; FISCHER RUSSELL J [US]; FERRARO JOSEPH [US]; LAL PR) 26 April 2007 (2007-04-26) the whole document	1-13
A	WO 2007/004089 A1 (KONINKL PHILIPS ELECTRONICS NV [NL]; NIELSEN LARRY [US]; MORONEY RICHA) 11 January 2007 (2007-01-11) page 1 - page 12 figures 2,4	1,2, 5-10,12, 13
A	US 2004/152961 A1 (CARLSON SVEN-ERIK [CH] ET AL) 5 August 2004 (2004-08-05) the whole document	1-13
A	US 2008/183097 A1 (LEYDE KENT W [US] ET AL) 31 July 2008 (2008-07-31) the whole document	1-13
A	US 6 354 299 B1 (FISCHELL DAVID R [US] ET AL) 12 March 2002 (2002-03-12) figure 25 paragraph [0230] - paragraph [0233]	1
A	WO 2009/100654 A1 (CHOU CHANG-AN [CN]) 20 August 2009 (2009-08-20) the whole document	1,2
A	US 2005/177029 A1 (SHEN YUAN-YAO [TW]) 11 August 2005 (2005-08-11) the whole document	6-9

INTERNATIONAL SEARCH REPORT

Information on patent family members

International application No
PCT/EP2010/051150

Patent document cited in search report		Publication date	Patent family member(s)			Publication date
US 2007197881	A1	23-08-2007	NONE			
US 2009062682	A1	05-03-2009	NONE			
US 2008027348	A1	31-01-2008	EP	2034885	A2	18-03-2009
			US	2008027515	A1	31-01-2008
			US	2008027347	A1	31-01-2008
			US	2008021341	A1	24-01-2008
			US	2008033502	A1	07-02-2008
			WO	2007150003	A2	27-12-2007
US 2009287107	A1	19-11-2009	EP	2040608	A2	01-04-2009
			WO	2007144307	A2	21-12-2007
			JP	2010500052	T	07-01-2010
US 2007149952	A1	28-06-2007	EP	1977389	A2	08-10-2008
			WO	2007079191	A2	12-07-2007
US 2009062678	A1	05-03-2009	WO	2006066577	A1	29-06-2006
			EP	1827209	A1	05-09-2007
WO 2007047667	A2	26-04-2007	NONE			
WO 2007004089	A1	11-01-2007	EP	1903929	A1	02-04-2008
			US	2009131761	A1	21-05-2009
US 2004152961	A1	05-08-2004	CA	2446488	A1	14-11-2002
			WO	02089663	A1	14-11-2002
			CN	1518427	A	04-08-2004
			JP	2005501576	T	20-01-2005
US 2008183097	A1	31-07-2008	EP	2124734	A2	02-12-2009
			WO	2008092133	A2	31-07-2008
US 6354299	B1	12-03-2002	US	6427086	B1	30-07-2002
WO 2009100654	A1	20-08-2009	CN	101502418	A	12-08-2009
US 2005177029	A1	11-08-2005	NONE			

专利名称(译)	便携式EEG监控系统，带无线通信		
公开(公告)号	EP2531100A1	公开(公告)日	2012-12-12
申请号	EP2010703435	申请日	2010-02-01
[标]申请(专利权)人(译)	唯听助听器公司		
申请(专利权)人(译)	WIDEX A / S		
当前申请(专利权)人(译)	同维工程A / S		
[标]发明人	KIDMOSE PREBEN WESTERMANN SREN ERIK		
发明人	KIDMOSE, PREBEN WESTERMANN, SØREN ERIK		
IPC分类号	A61B5/0476 A61B5/00 G06F19/00		
CPC分类号	A61B5/7282 A61B5/0031 A61B5/0476 A61B5/4094 A61B5/6816 A61B5/6817 A61B2560/0271 G06F19/3418		
其他公开文献	EP2531100B1		
外部链接	Espacenet		

摘要(译)

一种用于远程监视易患低血糖性癫痫发作的人的EEG信号的系统，包括具有电极（5）的EEG传感器部分（2），用于测量来自人的一个或多个EEG信号，并且包括处理单元（4）适于可移除地布置在所述人的耳朵处，具有用于分析EEG信号的EEG信号处理装置（13），其中信号处理装置适于基于EEG信号识别或预测在该EEG信号中的低血糖性癫痫发作。人。处理部分（4）包括判定装置，用于根据所述分析的EEG信号确定何时必须提供警报或信息。该系统包括EEG传感器部分（2）和处理单元（4）之间的第一连接（12），适于将EEG信号从可植入EEG传感器传输到处理单元。该系统包括外部部件（3），其适于从处理部件无线地接收警报，其中外部部件适于将警报转发给护理人员。该系统包括处理单元和外部部件之间的第二连接（20），该第二连接是无线的。