(19) Europäisches Patentamt
European Patent Office
Office européen des brevets

(11) EP 3 260 517 B1

(12) EUROPEAN PATENT SPECIFICATION

(45) Date of publication and mention of the grant of the patent:
14.11.2018 Bulletin 2018/46

(51) Int Cl.:
C09K 11/64 *(2006.01)*

(21) Application number: **17174766.0**

(22) Date of filing: **07.06.2017**

(54) **ALUMINATE FLUORESCENT MATERIAL, LIGHT EMITTING DEVICE USING THE SAME, AND METHOD OF PRODUCING ALUMINATE FLUORESCENT MATERIAL**

ALUMINATFLUORESZENZMATERIAL, LICHTEMITTIERENDE VORRICHTUNG DAMIT UND VERFAHREN ZUR HERSTELLUNG VON ALUMINATFLUORESZENZMATERIAL

MATÉRIAU FLUORESCENT EN ALUMINATE ET DISPOSITIF ÉLECTROLUMINESCENT L'UTILISANT ET PROCÉDÉ DE FABRICATION D'UN MATÉRIAU FLUORESCENT EN ALUMINATE

(84) Designated Contracting States:
AL AT BE BG CH CY CZ DE DK EE ES FI FR GB GR HR HU IE IS IT LI LT LU LV MC MK MT NL NO PL PT RO RS SE SI SK SM TR

(30) Priority: **09.06.2016 JP 2016115062**
21.03.2017 JP 2017054756

(43) Date of publication of application:
27.12.2017 Bulletin 2017/52

(73) Proprietor: **NICHIA CORPORATION**
Anan-shi
Tokushima 774-8601 (JP)

(72) Inventors:
- **Yoshida, Tomokazu**
Anan-shi,, Tokushima 774-8601 (JP)
- **Nishimata, Kazuya**
Anan-shi,, Tokushima 774-8601 (JP)
- **Hosokawa, Shoji**
Anan-shi,, Tokushima 774-8601 (JP)

(74) Representative: **Vossius & Partner**
Patentanwälte Rechtsanwälte mbB
Siebertstrasse 3
81675 München (DE)

(56) References cited:
EP-A1- 0 908 502 **EP-A1- 1 480 247**
WO-A1-99/34403 **JP-A- 2004 155 907**

- **SHINJI OKAMOTO ET AL: "Photoluminescence Properties of BaMgAl10O17 Doped with High Concentration of Mn2+ for Blue-LED-Based Solid-State Lighting", JOURNAL OF THE ELECTROCHEMICAL SOCIETY, vol. 158, no. 11, 1 January 2011 (2011-01-01), page J363, XP055423307, US ISSN: 0013-4651, DOI: 10.1149/2.057111jes**

Note: Within nine months of the publication of the mention of the grant of the European patent in the European Patent Bulletin, any person may give notice to the European Patent Office of opposition to that patent, in accordance with the Implementing Regulations. Notice of opposition shall not be deemed to have been filed until the opposition fee has been paid. (Art. 99(1) European Patent Convention).

EP 3 260 517 B1

Printed by Jouve, 75001 PARIS (FR)

Description

Background

Technical Field

[0001] The present invention relates to an aluminate fluorescent material, a light emitting device using the same and a method of producing an aluminate fluorescent material.

Description of Related Art

[0002] Various light emitting devices that emit white light, bulb color light, orange light by combination of a light emitting diode (LED) and a fluorescent material have been developed. In these light emitting devices, a desired luminescent color can be obtained according to the principle of light color mixing. As a light emitting device that emits white light, there is well known a light emitting device using a light emitting element that emits blue color and a fluorescent material that emits yellow color. The light emitting device using a light emitting element that emits blue color and a fluorescent material that emits yellow color or the like is desired to be used in a wide range of fields of general lighting, in-car lighting, displays, backlights for liquid crystals, etc. Among these, the fluorescent material for use in a light emitting device for backlights for liquid crystals is required to have a high color purity in addition to a high emission efficiency for reproducing colors in a broad range on the chromaticity coordinate system. In particular, the fluorescent material for use in a light emitting device for backlights for liquid crystals is desired to have a narrow full width at a half maximum (FWHM - hereinafter this is referred to as "half value width") of the emission peak in the emission spectrum thereof and to have a high color purity, from the viewpoint of realizing a broad color reproducibility range.

[0003] Japanese Unexamined Patent Publication No.2004-155907 discloses a manganese-activated aluminate fluorescent material such as (Ba, Sr)$MgAl_{10}O_{17}:Mn^{2+}$ as a green emitting fluorescent material having a narrow half value width of the emission peak in the emission spectrum thereof. The manganese-activated aluminate fluorescent material disclosed in Japanese Unexamined Patent publication No.2004-155907 is a fluorescent material that emits light when excited with vacuum UV rays having a wavelength in a range of 10 nm to 190 nm, specifically vacuum UV ray at 146 nm.

SUMMARY

[0004] However, the manganese-activated aluminate fluorescent material disclosed in Japanese Unexamined Patent Publication No.2004-155907 is, when combined with a light emitting element that emits light having an emission peak wavelength in a range of 380 nm or more and 485 nm or less (hereinafter this may be referred to as "near-UV to blue region"), insufficient in emission intensity.

[0005] Consequently, an object of the present invention is to provide an aluminate fluorescent material capable of having a high emission intensity through photoexcitation in a near-UV to blue region, a light emitting device, and a method for producing an aluminate fluorescent material.

[0006] For solving the above-mentioned problem, the present disclosure includes the following aspects.

[0007] A first embodiment of the present disclosure relates to an aluminate fluorescent material having a composition containing a first element that contains one or more elements selected from Ba and Sr, and a second element that contains Mg and Mn, wherein in the composition of the aluminate fluorescent material, when a molar ratio of Al is taken as 10, a total molar ratio of the first element is a value of a parameter a, a total molar ratio of the second element is a value of a parameter b, a molar ratio of Sr is a product of a value of a parameter m and the value of a parameter a, a molar ratio of Mn is a product of a value of a parameter n and the value of a parameter b, the value of a parameters a and b satisfy the following requirement (1), the value of a parameter m satisfies the following requirement (2), and the value of a parameter n satisfies the following requirement (3):

$$0.5 < b < a \leq 0.5b + 0.5 < 1.0 \qquad (1),$$

$$0 \leq m \leq 1.0 \qquad (2),$$

and

$$0.4 \leq n \leq 0.7 \qquad (3).$$

[0008] A second embodiment of the present disclosure relates to a light emitting device including the aluminate fluorescent material and an excitation light source.

[0009] A third embodiment of the present disclosure relates to a method of producing an aluminate fluorescent material, which includes mixing and heat-treating compounds that contain elements so as to provide a composition containing a first element that contains one or more elements selected from Ba and Sr, a second element that contains Mg and Mn, and Al and O, wherein in the composition, when a molar ratio of Al is taken as 10, a total molar ratio of the first element (Ba, Sr) is a value of a parameter a, a total molar ratio of the second element (Mg and Mn) is a value of a parameter b, a molar ratio of Sr is a product of a value of a parameter m and the value of a parameter a, a molar ratio of Mn is a product of a value of a parameter n and the value of a parameter b, the value of a parameters a and b satisfy the following requirement (1), the value of a parameter m satisfies the following requirement (2), and the value of a parameter n satisfies the following requirement (3):

$$0.5 < b < a \leq 0.5b + 0.5 < 1.0 \qquad (1),$$

$$0 \leq m \leq 1.0 \qquad (2),$$

and

$$0.4 \leq n \leq 0.7 \qquad (3).$$

[0010] In accordance with an embodiment of the present disclosure, it is possible to provide an aluminate fluorescent material having a high emission intensity through excitation by light having an emission spectrum in a range of 380 nm or more and 485 nm or less, a light emitting device using the same and a method of producing an aluminate fluorescent material.

BRIEF DESCRIPTION OF THE DRAWING

[0011]

Fig. 1 is a schematic cross-sectional view showing one example of a light emitting device.
Fig. 2 is a diagram showing light emission spectra of the aluminate fluorescent materials of Example 1 and Comparative Example 1.
Fig. 3 is a diagram showing reflection spectra of the aluminate fluorescent materials of Example 1 and Comparative Example 1.

DETAILED DESCRIPTION

[0012] The aluminate fluorescent material, the light emitting device and the production method for an aluminate fluorescent material of the present invention are described on a basis of the embodiments and examples. The embodiments shown below are exemplifications for exemplifying the technical idea of the present invention, and the present invention is not limited to the aluminate material, the light emitting device and the production method for an aluminate fluorescent material described below. The relationship between the color name and the chromaticity coordinate, and the relationship between the wavelength range of light and the color name of monochromatic light in accordance with JIS Z8110. The "fluorescent" means the emission of light by a substance that has absorbed light or other electromagnetic radiation.

Aluminate Fluorescent Material

[0013] The aluminate fluorescent material of the first aspect of the present invention is an aluminate fluorescent material having a composition containing a first element that contains one or more elements selected from Ba and Sr, the first element preferably consisting of one or more elements selected from Ba and Sr, and a second element that contains Mg and Mn, the second element preferably consisting of Mg and Mn, wherein in the composition of the aluminate

fluorescent material, when a molar ratio of Al is taken as 10, a total molar ratio of the first element is a value of a parameter a, a total molar ratio of the second element is a value of a parameter b, a molar ratio of Sr is a product of a value of a parameter m and the value of the parameter a, a molar ratio of Mn is a product of a value of a parameter n and the value of the parameter b, the value of a parameters a and b satisfy the following requirement (1), the value of the parameter m satisfies the following requirement (2), and the value of the parameter n satisfies the following requirement (3):

$$0.5 < b < a \leq 0.5b + 0.5 < 1.0 \qquad (1),$$

$$0 \leq m \leq 1.0 \qquad (2),$$

and

$$0.4 \leq n \leq 0.7 \qquad (3).$$

[0014] In the composition of the aluminate fluorescent material, the value of the parameter a is a total molar ratio of Ba and Sr. In the composition of the aluminate fluorescent material, when the value of the parameter a is not a value satisfying the requirement (1), the crystal structure may be unstable and the emission intensity may lower. In the composition of the aluminate fluorescent material, the value of the parameter b is a total molar ratio of Mg and Mn. In the composition of the aluminate fluorescent material, when the value of the parameter b is 0.5 or less, the crystal structure may be unstable and the emission intensity may lower.

[0015] In the composition of the aluminate fluorescent material, the value of the parameter a and the value of the parameter b are preferably values satisfying the following requirement (4).

$$0.7 < b < a \leq 0.5b + 0.5 < 1.0 \qquad (4)$$

[0016] In the composition of the aluminate fluorescent material, when the value of the parameter b is a value of more than 0.7, the crystal structure of the aluminate fluorescent material can be stabilized more and the emission intensity of the aluminate fluorescent material can be higher.

[0017] In the composition of the aluminate fluorescent material, the value of the parameter m indicates the molar ratio of Sr when the total molar ratio of Ba and Sr of the first element is 1, and the first element may be all Ba or may be all Sr.

[0018] In the composition of the aluminate fluorescent material, the value of the parameter n indicates the molar ratio of Mn when the total molar ratio of Mg and Mn of the second element is 1. In the composition of the aluminate fluorescent material, when the value of a parameter n indicating the molar ratio of Mn among Mg and Mn of the second element is less than 0.4 or more than 0.7, the emission intensity through photoexcitation in a near UV to blue region may lower.

[0019] In the composition of the aluminate fluorescent material, the value of the parameter n is preferably a value satisfying a requirement of $0.4 \leq n \leq 0.6$.

[0020] In the composition of the aluminate fluorescent material, when the value of the parameter n is the value satisfying the requirement of $0.4 \leq n \leq 0.6$, the emission intensity may be increased more and the emission intensity of the aluminate fluorescent material through photoexcitation in a near UV to blue region can be higher.

[0021] In the composition of the aluminate fluorescent material, the product of the value of the parameter n indicating the molar ratio of Mn among Mg and Mn and the value of the parameter b ($b \times n$) is preferably a value satisfying a requirement of $0.3 < b \times n < 0.6$.

[0022] For example, it is considered that the reason why the emission intensity through photoexcitation in a near-UV to blue region of the manganese-activated aluminate fluorescent material disclosed in Japanese Unexamined Patent Publication No.2004-155907 is low would be because, as the emission characteristics of the fluorescent material, the absorbance of light in a near-UV to blue region is lower than the absorbance of vacuum UV rays. The aluminate fluorescent material of the first embodiment of the present disclosure is, when excited with light in a near-UV to blue region, able to absorb a larger amount of light in a near-UV to blue region and therefore can have an increased emission intensity since the activation amount by Mn is larger than the above-mentioned predetermined value. In addition, by reducing the Mn activation amount to be lower than the above-mentioned predetermined value, concentration quenching which may be caused by too much activation could be prevented and therefore the emission intensity can thereby be increased.

[0023] Preferably, the aluminate fluorescent material has a composition represented by the following formula (I). The aluminate fluorescent material having a composition represented by the formula (I) has a high emission intensity and

through photoexcitation in a near-UV to blue region, the emission intensity thereof can be higher.

$$(Ba_{1-m},Sr_m)_a(Mg_{1-n},Mn_n)_bAl_{10}O_{15+a+b} \qquad (I)$$

wherein, a, b, m and n each are a number satisfying $0.5 < b < a \leq 0.5b + 0.5 < 1.0$, $0 \leq m \leq 1.0$, and $0.4 \leq n \leq 0.7$.

[0024] Regarding the aluminate fluorescent material of the first embodiment of the present disclosure, the half value width of the emission peak in the emission spectrum thereof, as excited with light in a near-UV to blue region, for example, with light having an emission peak wavelength of 450 nm, is preferably 45 nm or less, more preferably 40 nm or less, even more preferably 30 nm or less. As a fluorescent material capable of emitting green light by photoexcitation in a near-UV to blue region, for example, there is known a β-sialon fluorescent material doped with europium (Eu). The half value width of the emission peak in the emission spectrum of the β-sialon fluorescent material, when irradiated with light having an excitation wavelength of 450 nm, is 50 nm or so, that is, the half value width of the aluminate fluorescent material of the first embodiment of the present disclosure is narrower. The aluminate fluorescent material has a narrow half value width of the emission peak in the emission spectrum, and therefore has a high color purity. For example, when the light emitting device including the aluminate fluorescent material is used as a backlight for liquid crystals, the color reproducibility range can be broadened.

[0025] The aluminate fluorescent material of the first embodiment of the present disclosure is activated by manganese (Mn) and emits green light through photoexcitation in a near-UV to blue region. Specifically, the aluminate fluorescent material absorbs light falling within a wavelength range of 380 nm to 485 nm, and the emission peak wavelength in the emission spectrum thereof falls preferably in a range of 485 nm or more and 570 nm or less, more preferably in a range of 495 nm or more and 560 nm or less, even more preferably in a range of 505 nm or more and 550 nm or less.

Light Emitting Device

[0026] One example of a light emitting device, which is the second embodiment of the present disclosure and which includes the aluminate fluorescent material of the first embodiment of the present disclosure, is described with reference to the drawing attached hereto. Fig. 1 is a schematic cross-sectional view showing an example of the light emitting device 100 of an embodiment of the present invention.

[0027] The light emitting device 100 is provided with a molded article 40, a light emitting element 10 and a fluorescent member 50. The molded article 40 is integrally composed of a first lead 20, a second lead 30 and a resin part 42 containing a thermoplastic resin or a thermosetting resin. The molded article 40 forms a recess part having a bottom face and a side face, and the light emitting element 10 is mounted on the bottom face of the recess part. The light emitting element 10 has a pair of positive and negative electrodes, and the pair of positive and negative electrodes each are individually electrically connected to the first lead 20 and the second lead 30 each via a wire 60. The light emitting element 10 is covered with the fluorescent member 50. The fluorescent member 50 contains, for example, a fluorescent material 70 for wavelength conversion of the light from the light emitting element 10, and a resin. Further, the fluorescent material 70 contains a first fluorescent material 71 and optionally a second fluorescent material 72. The first lead 20 and the second lead 30 connected to the pair of positive and negative electrodes of the light emitting element 10 are partly exposed toward the outside of the package to constitute the light emitting device 100. Via these first lead 20 and second lead 30, the light emitting device 100 receives external power to emit light.

[0028] The light emitting element 10 is used as an excitation light source, and preferably has an emission peak wavelength within a range of 380 nm or more and 485 nm or less. The range of the emission peak wavelength of the light emitting element 10 is preferably in a range of 390 nm or more and 480 nm or less, more preferably in a range of 420 nm or more and 470 nm or less. The aluminate fluorescent material of the first embodiment of the present disclosure is efficiently excited by the excitation light source having an emission spectrum within a range of 380 nm or more and 485 nm or less. Regarding the aluminate fluorescent material, in particular, the optical reflectance thereof from an excitation light source having an emission peak wavelength within a range of 420 nm or more and 470 nm or less is low, that is, the light absorptivity thereof is high and the aluminate fluorescent material can be efficiently excited by the light. The aluminate fluorescent material of the first embodiment of the present disclosure can be efficiently excited by the light from the excitation light source having an emission peak wavelength within the above-mentioned wavelength range, and by using the aluminate fluorescent material having such a high emission intensity of this type, the light emitting device 100 that can emit mixed light of the light from the light emitting element 10 and the fluorescence from the fluorescent material 70 can be constructed.

[0029] The half value width of the emission spectrum of the light emitting element 10 is, for example, 30 nm or less.

[0030] Preferably, the light emitting element 10 uses a semiconductor light emitting element. Using the semiconductor light emitting element as a light source, a stable light emitting device having a high efficiency and a high linearity of output to input and having high mechanical impact resistance can be obtained.

[0031] Examples of the semiconductor light emitting element include a semiconductor light emitting element using a

nitride semiconductor ($In_XAl_YGa_{1-X-Y}N$, $0 \leq X$, $0 \leq Y$, $X + Y \leq 1$).

[0032] The light emitting device 100 includes at least the aluminate fluorescent material of the first embodiment of the present disclosure, and preferably contains the aluminate fluorescent material having a composition represented by the formula (I).

[0033] The first fluorescent material 71 containing the aluminate fluorescent material of the first embodiment of the present disclosure can be contained, for example, in the fluorescent member 50 to cover the light emitting element 10, thereby constituting the light emitting device 100. In the light emitting device 100 in which the light emitting element 10 is covered by the fluorescent member 50 that contains the first fluorescent material 71 including the aluminate fluorescent material, a part of the light released from the light emitting element 10 is absorbed by the aluminate fluorescent material and is thereby emitted as green light. Using the light emitting element 10 that emits light having an emission spectrum within a wavelength in a range of 380 nm or more and 485 nm or less, especially emitting light having an emission spectrum within a wavelength in a range of 420 nm or more and 470 nm or less, the emitted light can be more effectively utilized. Accordingly, a light emitting device having a high emission efficiency can be provided.

[0034] The content of the first fluorescent material 71 is, for example, in a range of 1 part by mass or more and 50 parts by mass or less relative to the resin (100 parts by mass) and is preferably in a range of 2 parts by mass or more and 40 parts by mass or less.

[0035] Preferably, the fluorescent member 50 contains the second fluorescent material 72 whose emission peak wavelength differs from that of the first fluorescent material 71. For example, the light emitting device 100 is provided with the light emitting element 10 having an emission spectrum within a wavelength range of 380 nm or more and 485 nm or less, and especially emitting light having an emission peak wavelength within a range of 420 nm or more and 470 nm or less, and the first fluorescent material 71 containing the aluminate fluorescent material of the first embodiment of the present disclosure that is excited by the light, and optionally the second fluorescent material 72, and consequently, the light emitting device 100 can have a broad color reproducibility range and good color rendering properties.

[0036] The second fluorescent material 72 may be any one that absorbs light from the light emitting element 10 for wavelength conversion into light having a different wavelength of the first fluorescent material 71. Examples thereof include $(Ca,Sr,Ba)_2SiO_4:E_u$, $(Y,Gd,Lu)_3(Ga,Al)_5O_{12}:Ce$, $(Si,Al)_6(O,N)_8:Eu$, $SrGa_2S_4:Eu$, $K_2SiF_6:Mn$, $(Ba,Ca,Sr)_2Si_5N_8:Eu$, $CaAlSiN_3:E_u$, $(Ca,Sr)AlSiN_3:E_u$, $(Ca,Sr,Ba)_8MgSi_4O_{16}(F,Cl,Br)_2:Eu$, $(Y,La)_3Si_6N_{11}:Ce$, $Ca_3Sc_2Si_3O_{12}:Ce$, $CaSc_4O_4:Ce$, etc.

[0037] In the case where the fluorescent member 50 further contains the second fluorescent material 72, the second fluorescent material 72 is preferably a red fluorescent material to emit a red color, and preferably absorbs light falling within a wavelength range of 380 nm or more and 485 nm or less, and emits light falling within a wavelength in a range of 610 nm or more and 780 nm or less. Containing the red fluorescent material, the light emitting device can be more favorably applied to lighting systems, liquid crystal display devices, etc.

[0038] The red fluorescent material includes a tetravalent Mn-activated fluoride fluorescent material having a compositional formula represented by $K_2SiF_6:Mn$, a divalent Eu-activated nitride fluorescent material represented by $CaSiAlN_3:Eu$, $(Ca,Sr)AlSiN_3:Eu$, $SrLiAl_3N_4:Eu$, etc. Among these, the red fluorescent material is, from the viewpoint of increasing the color purity and broadening the color reproducibility range, preferably a tetravalent Mn-activated fluoride fluorescent material of such that the half value width of the emission spectrum thereof is 20 nm or less.

[0039] The first fluorescent material 71 and optional the second fluorescent material 72 (the two may be simply referred to as "fluorescent material 70" as combined), along with a sealant material, constitute the fluorescent member 50 that covers the light emitting element. The sealant material which may be used in the fluorescent member 50 includes a resin, such as a silicone resin, an epoxy resin, etc.

[0040] The total content of the fluorescent material 70 in the fluorescent member 50 may be, for example, in a range of 5 parts by mass or more and 300 parts by mass or less, relative to the resin (100 parts by mass), and is preferably in a range of 10 parts by mass or more and 250 parts by mass or less, even more preferably in a range of 15 parts by mass or more and 230 parts by mass or less, still more preferably in a range of 15 parts by mass or more and 200 parts by mass or less. When the total content of the fluorescent material in the fluorescent member 50 falls within the range, the light emitted by the light emitting element 10 can be efficiently processed for wavelength conversion by the fluorescent material 70.

[0041] The fluorescent member 50 may further contain a filler, a light diffuser and the like in addition to the sealant material and the fluorescent material 70. For example, containing a light diffuser, the member can relieve the directionality from the light emitting element 10 and can therefore enlarge the viewing angle. Examples of the filler include silica, titanium oxide, zinc oxide, zirconium oxide, alumina, etc. In the case where the fluorescent member 50 contains a filler, the filler content may be, for example, in a range of 1 part by mass or more and 20 parts by mass or less relative to the resin (100 parts by mass).

Method of Producing an Aluminate Fluorescent Material

[0042] Next, as the third embodiment of the present disclosure, a method of producing the aluminate fluorescent material of the first embodiment of the present disclosure is described. The aluminate fluorescent material can be produced using compounds containing elements that constitute the composition of the aluminate fluorescent material.

Compound Containing Elements to Constitute Composition of Aluminate Fluorescent Material

[0043] The compounds containing elements to constitute the composition of the aluminate fluorescent material include compounds containing aluminum (Al), compounds containing magnesium (Mg), compounds containing manganese (Mn) and one or both of compounds containing barium (Ba) and compounds containing strontium (Sr).

Aluminum Containing Compounds

[0044] The aluminum containing compounds include Al-containing oxides, hydroxides, nitrides, oxynitrides, fluorides, chlorides, etc. These compounds may be hydrates. As the aluminum-containing compound, an aluminum metal elementary substance or an aluminum alloy may also be used or the metal elementary substance or the alloy may be used for at least a part of the compounds to be used.

[0045] Specific examples of the Al-containing compounds include Al_2O_3, $Al(OH)_3$, AlN, AlON, AlF_3, $AlCl_3$, etc. One alone or two or more kinds of the Al-containing compounds may be used either singly or as combined. The Al-containing compound is preferably an oxide (Al_2O_3). As compared with any other material, the oxide does not contain any other element than those of the intended composition of the aluminate fluorescent material, and can readily give the fluorescent material having a desired composition. In addition, in the case where a compound having any other element than those to be the intended composition is used, residual impurity elements may remain in the resultant fluorescent material, and the residual impurity elements may be killer factors against light emission and the emission intensity would be thereby noticeably lowered.

Barium Containing Compound

[0046] The barium containing compounds include Ba-containing oxides, hydroxides, carbonates, nitrates, sulfates, carboxylates, halides, nitrides, etc. These barium containing compounds may be in the form of hydrates. Specific examples thereof include BaO, $Ba(OH)_2{\cdot}8H_2O$, $BaCO_3$, $Ba(NO_3)_2$, $BaSO_4$, $Ba(OCOH)_2{\cdot}2H_2O$, $Ba(OCOCH_3)_2$, $BaCl_2{\cdot}6H_2O$, Ba_3N_2, BaNH, etc. One alone or two or more kinds of the Ba-containing compounds may be used either singly or as combined. Among these, from the viewpoint of easiness in handling, carbonates and oxides are preferred. A Ba-containing carbonate ($BaCO_3$) is more preferred as it is stable in air, it can readily decompose by heating, any other element than those of the intended composition hardly remain, and it is easy to prevent emission intensity reduction owing to residual impurity elements.

Strontium Containing Compound

[0047] The strontium containing compounds include Sr-containing oxides, hydroxides, carbonates, nitrates, sulfates, carboxylates, halides, nitrides, etc. These strontium containing compounds may be in the form of hydrates. Specific examples thereof include SrO, $Sr(OH)_2{\cdot}8H_2O$, $SrCO_3$, $Sr(NO_3)_2{\cdot}4H_2O$, $SrSO_4$, $Sr(OCOH)_2{\cdot}H_2O$, $Sr(OCOCH_3)_2{\cdot}0.5H_2O$, $SrCl_2{\cdot}6H_2O$, Sr_3N_2, SrNH, etc. One alone or two or more kinds of the Sr-containing compounds may be used either singly or as combined. Among these, from the viewpoint of easiness in handling, carbonates and oxides are preferred. A Sr-containing carbonate ($SrCO_3$) is more preferred as it is stable in air, it can readily decompose by heating, any other element than those of the intended composition hardly remain, and it is easy to prevent emission intensity reduction owing to residual impurity elements.

Magnesium Containing Compounds

[0048] The magnesium containing compounds include Mg-containing oxides, hydroxides, carbonates, nitrates, sulfates, carboxylates, halides, nitrides, etc. These magnesium containing compounds may be in the form of hydrates. Specific examples thereof include MgO, $Mg(OH)_2$, $3MgCO_3{\cdot}Mg(OH)_2{\cdot}3H_2O$, $MgCO_3{\cdot}Mg(OH)_2{\cdot}2H_2O$, $Mg(NO_3)_2{\cdot}6H_2O$, $MgSO_4$, $Mg(OCOH)_2{\cdot}H_2O$, $Mg(OCOCH_3)_2{\cdot}4H_2O$, $MgCl_2$, Mg_3N_2, MgNH, etc. One alone or two or more kinds of the Mg-containing compounds may be used either singly or as combined. Among these, from the viewpoint of easiness in handling, carbonates and oxides are preferred. A Mg-containing oxide (MgO) is more preferred as it is stable in air, it can readily decompose by heating, any other element than those of the intended composition hardly remain, and it is

easy to prevent emission intensity reduction owing to residual impurity elements.

Manganese Containing Compound

[0049] The manganese containing compounds include Mn-containing oxides, hydroxides, carbonates, nitrates, sulfates, carboxylates, halides, nitrides, etc. These manganese containing compounds may be in the form of hydrates. Specific examples thereof include MnO_2, Mn_2O_2, Mn_3O_4, MnO, $Mn(OH)_2$, $MnCO_3$, $Mn(NO_3)_2$, $Mn(OCOCH_3)_2 \cdot 2H_2O$, $Mn(OCOCH_3)_3 \cdot 2H_2O$, $MnCl_2 \cdot 4H_2O$, etc. One alone or two or more kinds of the Mn-containing compounds may be used either singly or as combined. Among these, from the viewpoint of easiness in handling, carbonates and oxides are preferred. A Mn-containing carbonate ($MnCO_3$) is more preferred as it is stable in air, it can readily decompose by heating, any other element than those of the intended composition hardly remain, and it is easy to prevent emission intensity reduction owing to residual impurity elements.

Mixing of Compounds

[0050] In the method of producing the aluminate fluorescent material of the third embodiment of the present disclosure, a Mg-containing compound, a Mn-containing compound, an Al-containing compound and one or both of a Ba-containing compound and a Sr-containing compound are mixed in such a manner that the aluminate fluorescent material to be produced could have a composition where the molar ratio of Al is taken as 10, the total molar ratio of the first element is a value of a parameter a, the total molar ratio of the second element is a value of a parameter b, the molar ratio of Sr is a product of a value of a parameter m and the value of the parameter a, the molar ratio of Mn is a product of a value of a parameter n and the value of the parameter b, the value of the parameters a and b are values satisfying the following requirement (1), the value of the parameter m is a value satisfying the following requirement (2), and the value of the parameter n is a value satisfying the following requirement (3), thereby preparing a raw material mixture.

$$0.5 < b < a \leq 0.5b + 0.5 < 1.0 \qquad (1)$$

$$0 \leq m \leq 1.0 \qquad (2)$$

$$0.4 \leq n \leq 0.7 \qquad (3)$$

[0051] Preferably, the element-containing compounds are mixed in such a manner that the value of the parameters a and b could be a value satisfying the following requirement (4).

$$0.7 < b < a \leq 0.5b + 0.5 < 1.0 \qquad (4)$$

[0052] When the value of the parameter b is larger than 0.7 and when the value of the parameters a and b are numbers satisfying the above requirement (4), the crystal structure of the aluminate fluorescent material can be stable and the emitting intensity of the resultant aluminate fluorescent material can be high.

[0053] Preferably, the value of the parameter n satisfies the requirement of $0.4 \leq n \leq 0.6$, or the product of the value of the parameter b and the value of the parameter n ($b \times n$) is a value satisfying the requirement of $0.3 < b \times n < 0.6$.

[0054] Accordingly, the Mn activation amount can fall within an optimum range, and light absorption in a near-UV to blue region contained in the excitation light source can be promoted, and consequently, concentration quenching which may be caused by too much Mn activation can be prevented, the emission intensity can be increased, and the emission intensity through photoexcitation in a near UV to blue region can be further increased.

[0055] The raw material mixture may optionally contain a flux of halide or the like. In the raw material mixture containing a flux, reaction between the raw materials can be promoted and solid-phase reaction can go on more uniformly. This is because the temperature of heat treatment for the raw material mixture would be nearly the same as the liquid phase formation temperature for halides and the like to be used as the flux, or would be higher than the liquid phase formation temperature, and therefore the reaction could be promoted.

[0056] The halides includes fluorides, chlorides and others of rare earth metals, alkaline earth metals, alkali metals, etc. In the case where an alkaline earth metal halide is used as the flux, the flux may be added as the compound to provide the composition of the intended aluminate fluorescent material. Specific examples of the flux include barium

fluoride (BaF_2), strontium fluoride (SrF_2), magnesium fluoride (MgF_2), aluminum fluoride (AlF_3), manganese fluoride (MnF_2), calcium fluoride (CaF_2), etc. Magnesium fluoride (MgF_2) is preferred. This is because, by using magnesium fluoride as the flux, the crystal structure is stabilized.

[0057] In the case where the raw material mixture contains the flux, the flux content is preferably 10% by mass or less, based on the raw material mixture (100% by mass), more preferably 5% by mass or less, and is preferably 0.1% by mass or more. When the flux content falls within the range, difficulty in formation of crystal structure owing to shortage of the flux to cause grain growth failure could be evaded, and difficulty in formation of crystal structure owing to excessive flux could also be evaded.

[0058] For the raw material mixture, the compounds each containing the intended element are weighed to be in a desired blending ratio, and then ground and mixed using, for example, a dry-process grinding machine such as a ball mill, a shaking mill, a hammer mill, a roll mill, a jet mill, or may be ground and mixed using a mortar and a pestle, etc. For example, the compounds may be mixed using a mixing machine such as a ribbon blender, a Henschel mixer, a V-shaped blender, or may be ground and mixed using both the dry-process grind machine and the mixing machine. The mixing may be dry-process mixing, or may also be wet-process mixing with a solvent added to the system. Dry-process mixing is preferred. This is because the processing time may be shortened more in dry-process mixing than in wet-process mixing, therefore leading to productivity improvement.

Heat Treatment of Raw Material Mixture

[0059] The raw material mixture may be heat-treated in a crucible, a boat formed of a carbonaceous material such as graphite or the like, or a material of boron nitride (BN), aluminum oxide (alumina), tungsten (W), molybdenum (Mo), etc.

[0060] The heat treatment temperature for the raw material mixture is, from the viewpoint of the stability of the crystal structure, preferably in a range of 1,000°C or higher and 1,800°C or lower, more preferably in a range of 1,100°C or higher and 1,750°C or lower, even more preferably in a range of 1,200°C or higher and 1,700°C or lower, especially more preferably in a range of 1,300°C or higher and 1,650°C or lower.

[0061] The heat treatment time differs depending on the heating speed, the heat treatment atmosphere and others. After the system has reached the heat treatment temperature, it is kept as such preferably for 1 hour or more, more preferably 2 hours or more, even more preferably 3 hours or more, and preferably 20 hours or less, more preferably 18 hours or less, even more preferably 15 hours or less.

[0062] The atmosphere for heat treatment for the raw material mixture may be an inert atmosphere of argon, nitrogen, a reductive atmosphere containing hydrogen, or an oxidative atmosphere such as air, etc. Preferably, the raw material mixture is heat-treated in a reductive nitrogen atmosphere to give a fluorescent material. More preferably, the atmosphere for heat treatment for the raw material mixture is a nitrogen atmosphere containing hydrogen gas.

[0063] For the aluminate fluorescent material, the raw material mixture can be more reactive in an atmosphere having a high reductive power such as an atmosphere containing hydrogen and nitrogen, and can be heat-treated therein under an atmospheric pressure without pressurization. For the heat treatment, for example, an electric furnace, a gas furnace or the like may be used.

Post Treatment

[0064] The resultant fluorescent material may be post-treated for wet dispersion, wet-process sieving, dewatering, drying, dry-process sieving. According to such post treatment, a fluorescent material having a desired mean particle size can be obtained. For example, the fluorescent material after post treatment is dispersed in a solvent, then the dispersed fluorescent material is put on a sieve, and while a solvent flow is given thereto along with various shaking given thereto via the sieve, the baked product is led to pass through a mesh for wet-process sieving, and then dewatered, dried and dry-sieved to give a fluorescent material having a desired mean particle size.

[0065] By dispersing the fluorescent material after heat treatment in a medium, impurities such as baked residues of flux as well as unreacted components of the raw materials can be removed. For wet-process dispersing, dispersion media such as alumina balls, zirconia balls and the like may be used.

EXAMPLES

[0066] The present invention is hereunder specifically described by reference to the following Examples and Comparative Examples.

Example 1

[0067] As raw materials, 36.6 g of $BaCO_3$ ($BaCO_3$ content: 99.3 mass%), 27.4 g of $SrCO_3$ ($SrCO_3$ content: 99.0

mass%), 204.9 g of Al_2O_3 (Al_2O_3 content: 99.5 mass%), 4.0 g of MgO (MgO content: 98.0 mass%), 24.7 g of $MnCO_3$ ($MnCO_3$ content: 94.8 mass%) were weighed so that the blending molar ratio could have a composition represented by $(Ba_{0.5}Sr_{0.5})_{0.92}(Mg_{0.4}Mn_{0.6})_{0.85}Al_{10}O_{16.77}$, and as a flux, 2.5 g of MgF_2 was added and dry-blended to give a raw material mixture. The resultant raw material mixture was filled in an alumina crucible and the crucible was closed with a lid, and in a mixed atmosphere of 3 vol% of H_2 and 97 vol% of N_2, heat treatment was performed at 1,500°C for 5 hours to give an aluminate fluorescent material.

Example 2

[0068] An aluminate fluorescent material was obtained in the same manner as in Example 1 except that, as raw material, 37.8 g of $BaCO_3$, 28.4 g of $SrCO_3$, 205.6 g of Al_2O_3, 7.6 g of MgO and 18.1 g of $MnCO_3$ were weighed so that the blending molar ratio could have a composition represented by $(Ba_{0.5}Sr_{0.5})_{0.95}(Mg_{0.6}Mn_{0.4})_{0.93}Al_{10}O_{16.88}$, and as a flux, 2.5 g of MgF_2 was added.

Example 3

[0069] An aluminate fluorescent material was obtained in the same manner as in Example 1 except that, as raw material, 37.1 g of $BaCO_3$, 27.8 g of $SrCO_3$, 201.6 g of Al_2O_3, 4.4 g of MgO and 26.6 g of $MnCO_3$ were weighed so that the blending molar ratio could have a composition represented by $(Ba_{0.5}Sr_{0.5})_{0.95}(Mg_{0.4}Mn_{0.6})_{0.93}Al_{10}O_{16.88}$, and as a flux, 2.5 g of MgF_2 was added.

Example 4

[0070] An aluminate fluorescent material was obtained in the same manner as in Example 1 except that, as raw material, 37.2 g of $BaCO_3$, 27.9 g of $SrCO_3$, 208.6 g of Al_2O_3, 6.9 g of MgO and 16.8 g of $MnCO_3$ were weighed so that the blending molar ratio could have a composition represented by $(Ba_{0.5}Sr_{0.5})_{0.92}(Mg_{0.6}Mn_{0.4})_{0.85}Al_{10}O_{16.77}$, and as a flux, 2.5 g of MgF_2 was added.

Example 5

[0071] An aluminate fluorescent material was obtained in the same manner as in Example 1 except that, as raw material, 36.2 g of $BaCO_3$, 27.2 g of $SrCO_3$, 203.0 g of Al_2O_3, 2.5 g of MgO and 28.6 g of $MnCO_3$ were weighed so that the blending molar ratio could have a composition represented by $(Ba_{0.5}Sr_{0.5})_{0.92}(Mg_{0.3}Mn_{0.7})_{0.85}Al_{10}O_{16.77}$, and as a flux, 2.5 g of MgF_2 was added.

Comparative Example 1

[0072] An aluminate fluorescent material was obtained in the same manner as in Example 1 except that, as raw material, 38.6 g of $BaCO_3$, 29.0 g of $SrCO_3$, 209.8 g of Al_2O_3, 10.9 g of MgO and 9.2 g of $MnCO_3$ were weighed so that the blending molar ratio could have a composition represented by $(Ba_{0.5}Sr_{0.5})_{0.95}(Mg_{0.8}Mn_{0.2})_{0.93}Al_{10}O_{16.88}$, and as a flux, 2.5 g of MgF_2 was added.

Comparative Example 2

[0073] An aluminate fluorescent material was obtained in the same manner as in Example 1 except that, as raw material, 38.3 g of $BaCO_3$, 28.8 g of $SrCO_3$, 197.7 g of Al_2O_3, 4.8 g of MgO and 28.1 g of $MnCO_3$ were weighed so that the blending molar ratio could have a composition represented by $(Ba_{0.5}Sr_{0.5})_{1.00}(Mg_{0.4}Mn_{0.6})_{1.00}Al_{10}O_{17.00}$, and as a flux, 2.4 g of MgF_2 was added.

Comparative Example 3

[0074] An aluminate fluorescent material was obtained in the same manner as in Example 1 except that, as raw material, 36.4 g of $BaCO_3$, 27.3 g of $SrCO_3$, 197.8 g of Al_2O_3, 1.4 g of MgO and 34.8 g of $MnCO_3$ were weighed so that the blending molar ratio could have a composition represented by $(Ba_{0.5}Sr_{0.5})_{0.95}(Mg_{0.2}Mn_{0.8})_{0.93}Al_{10}O_{16.88}$, and as a flux, 2.4 g of MgF_2 was added.

Evaluation of Emission Characteristics

Relative Emission Intensity (%)

[0075] The emission characteristics of the fluorescent materials of Examples and Comparative Examples were measured. Using a quantum efficiency measurement system (QE-2000 manufactured by Otsuka Electronics Co., Ltd.), each fluorescent material was irradiated with light having an excitation wavelength of 450 nm to measure the emission spectrum thereof at room temperature (25°C ± 5°C). The emission intensity (%) of the resultant emission spectrum was determined. The relative emission intensity was calculated based on the emission intensity 100% of the fluorescent material of Comparative Example 1. The results are shown in Table 1. Fig. 2 shows the emission spectrum of the relative emission intensity (%) to wavelength of the aluminate fluorescent materials of Example 1 and Comparative Example 1.

Half Value Width: FWHM

[0076] The half value width (FWHM) of the resultant emission spectrum of the fluorescent material of Examples and Comparative Examples was measured. The results are shown in Table 1.

Emission Peak Wavelength

[0077] The wavelength at which the resultant emission spectrum of the fluorescent material of Examples and Comparative Examples was maximum was determined as an emission peak wavelength (nm). The results are shown in Table 1.

Reflectance (%)

[0078] Using a spectral fluorophotometer (F-4500 manufactured by Hitachi High-technologies Corporation), a sample of the fluorescent material of Examples and Comparative Examples was irradiated with light from an excitation light source a halogen lamp, at room temperature (25°C ± 5°C), and the wavelength of the spectroscope on the excitation side and the fluorescence side was scanned in combination to measure the reflected light. The proportion of the reflected light relative to the light having an excitation wavelength of 450 nm is shown in Table 1 as a reflectance (%) based on the reflectance of $CaHPO_4$. In addition, the reflection to wavelength of the fluorescent material of the Examples and the fluorescent material of Comparative Example 1 is shown in Fig. 3 as a reflection spectrum thereof.

Table 1

	Compositional Ratio	a	b	m	n	b × n	Optical Characteristics			450nm Reflectance (%)
							Relative Emission Intensity (%)	Emission Peak Wavelength (nm)	FWHM (nm)	
Example 1	$(Ba_{0.5}Sr_{0.5})_{0.92}(Mg_{0.4}Mn_{0.6})_{0.85}Al_{10}O_{16.77}$	0.92	0.85	0.5	0.6	0.510	152	518	29	78.3
Example 2	$(Ba_{0.5}Sr_{0.5})_{0.95}(Mg_{0.6}Mn_{0.4})_{0.93}Al_{10}O_{16.88}$	0.95	0.93	0.5	0.4	0.372	141	517	28	79.9
Example 3	$(Ba_{0.5}Sr_{0.5})_{0.95}(Mg_{0.4}Mn_{0.6})_{0.93}Al_{10}O_{16.88}$	0.95	0.93	0.5	0.6	0.558	135	518	29	76.6
Example 4	$(Ba_{0.5}Sr_{0.5})_{0.92}(Mg_{0.6}Mn_{0.4})_{0.85}Al_{10}O_{16.77}$	0.92	0.85	0.5	0.4	0.340	135	517	29	79.8
Example 5	$(Ba_{0.5}Sr_{0.5})_{0.92}(Mg_{0.3}Mn_{0.7})_{0.85}Al_{10}O_{16.77}$	0.92	0.85	0.5	0.7	0.595	111	517	29	76.9
Comparative Example 1	$(Ba_{0.5}Sr_{0.5})_{0.95}(Mg_{0.8}Mn_{0.2})_{0.93}Al_{10}O_{16.88}$	0.95	0.93	0.5	0.2	0.186	100	516	28	86.9
Comparative Example 2	$(Ba_{0.5}Sr_{0.5})_{1.00}(Mg_{0.4}Mn_{0.6})_{1.00}Al_{10}O_{17.00}$	1.00	1.00	0.5	0.6	0.600	84	517	29	75.6
Comparative Example 3	$(Ba_{0.5}Sr_{0.5})_{0.95}(Mg_{0.2}Mn_{0.8})_{0.93}Al_{10}O_{16.88}$	0.95	0.93	0.5	0.8	0.744	13	518	29	75.2

[0079] As shown in Table 1, in the compositions of the aluminate fluorescent materials of Examples 1 to 5, the value of the parameters a, b, m and n satisfies the requirements (1) to (3) when the molar ratio Al is taken as 10. The aluminate fluorescent materials of these Examples 1 to 5 had a higher relative emission intensity owing to excitation of blue light having an emission peak wavelength of 450 nm, than those of Comparative Examples 1 to 3. In particular, in the aluminate fluorescent materials of Examples 1 to 4, the value of the parameter n indicating the molar ratio of Mn in the second element (Mg and Mn) satisfies $0.4 \leq n \leq 0.6$, and the product of the value of the parameter n indicating the molar ratio of Mn and the value of the parameter b ($b \times n$) satisfies the requirement of $0.3 < b \times n < 0.6$, when the molar ratio Al is taken as 10, and therefore the relative emission intensity of the aluminate fluorescent materials was 135% or more and was extremely high owing to excitation of blue light having an emission peak wavelength of 450 nm. In addition, as also shown in Table 1, the reflectance of the aluminate fluorescent materials of Examples 1 to 5 to the excitation light, blue light having an emission peak wavelength of 450 nm was 80% or less and was low. From these results, it is confirmed that the aluminate fluorescent materials of Examples 1 to 5 greatly absorb a part of the excitation light, blue light having an emission peak wavelength of 450 nm, and exhibits fluorescence at a high emission intensity.

[0080] As shown in Table 1, in the composition of the aluminate fluorescent material of Comparative Example 1, the value of the parameter n indicating the molar ratio of Mn in the second element (Mg and Mn) did not satisfy the requirement (3), $0.4 \leq n \leq 0.7$. In Comparative Example 1, the reflectance was more than 80%, and was higher than the reflectance of the aluminate fluorescent materials of Examples 1 to 5, in other words, the absorbance of the excitation light having an emission peak wavelength of 450 nm of the former was small and the relative emission intensity of the former was lower than that of the aluminate fluorescent materials of Examples 1 to 5.

[0081] Also as shown in Table 1, in the composition of the aluminate fluorescent material of Comparative Example 2, the value of the parameter a indicating the total molar ratio of the first element (Ba, Sr) was equal to the value of the parameter b indicating the total molar ratio of the second element (Mg and Mn), and did not satisfy the requirement (1). In Comparative Example 2, the relative emission intensity was low.

[0082] Also as shown in Table 1, in the composition of the aluminate fluorescent material of Comparative Example 3, the value of the parameter n indicating the molar ratio of Mn in the second element (Mg and Mn) did not satisfy the requirement (3), $0.4 \leq n \leq 0.7$, and the value of the parameter n was larger than the upper limit, 0.7. In Comparative Example 3, the relative emission intensity was 13% and was extremely low.

[0083] In the compositions of the aluminate fluorescent materials of Comparative Examples 1 to 3, the product of the value of the parameter n indicating the molar ratio of Mn and the value of the parameter b ($b \times n$) did not satisfy the requirement of $0.3 < b \times n < 0.6$.

[0084] In addition, as shown in Table 1, the half value width of the emission peak in the emission spectrum of the aluminate fluorescent materials of Examples 1 to 5 was less than 30 nm and was narrow.

[0085] As shown in Table 1 and Fig. 2, the aluminate fluorescent materials of Examples 1 to 5 emitted light whose emission peak wavelength falls within a range of 516 nm to 518 nm, through excitation of blue light having an emission peak intensity of 450 nm. As shown in the emission spectrum in Fig. 2, the relative emission intensity at the emission peak wavelength of the aluminate fluorescent material of Example 1 was higher than the relative emission intensity of Comparative Example 1.

[0086] Also as shown in Fig. 3, the reflection spectrum within a range of 420 nm or more and 470 nm or less of the aluminate fluorescent material of Example 1 was lower than the reflection spectrum within the same range of the aluminate fluorescent material of Comparative Example 1, and in particular, the absorption of excitation light having a wavelength of 420 nm or more and 470 nm or less of the former is high, and it is confirmed that the aluminate fluorescent material of Example 1 absorbed the excitation light falling within the wavelength range and emitted fluorescence at a high emission intensity.

[0087] In accordance with an embodiment of the present invention, it is possible to provide an aluminate fluorescent material having a high emission intensity as a green emitting fluorescent material that is excited with light falling in a near-UV to blue region. The light emitting device using the aluminate fluorescent material can be used in a wide range of fields of general lighting, in-car lighting, displays, backlights for liquid crystals, traffic lights, lighting switches, etc. The aluminate fluorescent material of one embodiment of the present disclosure has a high emission intensity, has a narrow half value width of an emission peak and has a high color purity, and therefore can broaden the color reproducibility range, and is favorably usable as a backlight source for liquid crystals.

Claims

1. An aluminate fluorescent material having a composition containing a first element that contains one or more elements selected from Ba and Sr, and a second element that contains Mg and Mn, wherein:

   in the composition of the aluminate fluorescent material, when the molar ratio of Al is taken as 10, the total

molar ratio of the first element is a value of a parameter a, the total molar ratio of the second element is a value of a parameter b, the molar ratio of Sr is a product of a value of a parameter m and the value of the parameter a, the molar ratio of Mn is a product of a value of a parameter n and the value of the parameter b,
the value of the parameters a and b satisfy the following requirement (1), the value of the parameter m satisfies the following requirement (2), and the value of the parameter n satisfies the following requirement (3):

$$0.5 < b < a \leq 0.5b + 0.5 < 1.0 \qquad (1),$$

$$0 \leq m \leq 1.0 \qquad (2),$$

and

$$0.4 \leq n \leq 0.7 \qquad (3).$$

2. The aluminate fluorescent material according to claim 1, which has a composition represented by the following formula (I):

$$(Ba_{1-m},Sr_m)_a(Mg_{1-n},Mn_n)_bAl_{10}O_{15+a+b} \qquad (I)$$

wherein a, b, m and n each are a number satisfying $0.5 < b < a \leq 0.5b + 0.5 < 1.0$, $0 \leq m \leq 1.0$, and $0.4 \leq n \leq 0.7$.

3. The aluminate fluorescent material according to claim 1 or 2, wherein the value of parameters a and b each satisfy the following requirement (4):

$$0.7 < b < a \leq 0.5b + 0.5 < 1.0 \qquad (4).$$

4. A light emitting device comprising the aluminate fluorescent material of any one of claims 1 to 3, and an excitation light source.

5. The light emitting device according to claim 4, wherein the excitation light source has an emission spectrum within a range of 380 nm or more and 485 nm or less.

6. The light emitting device according to claim 4 or 5, wherein the excitation light source has an emission peak wavelength within a range of 420 nm or more and 470 nm or less.

7. A method of producing an aluminate fluorescent material, which includes mixing and heat-treating compounds that contain elements so as to provide a composition containing a first element that contains one or more elements selected from Ba and Sr, a second element that contains Mg and Mn, and Al and O, wherein:

in the composition, when the molar ratio of Al is taken as 10, the total molar ratio of the first element is a value of a parameter a, the total molar ratio of the second element is a value of a parameter b, the molar ratio of Sr is a product of a value of a parameter m and the value of the parameter a, the molar ratio of Mn is a product of a value of a parameter n and the value of the parameter b,
the value of the parameters a and b satisfy the following requirement (1), the value of the parameter m satisfies the following requirement (2), and the value of the parameter n satisfies the following requirement (3):

$$0.5 < b < a \leq 0.5b + 0.5 < 1.0 \qquad (1),$$

$$0 \leq m \leq 1.0 \qquad (2),$$

and

$$0.4 \leq n \leq 0.7 \qquad (3).$$

8. The method of producing an aluminate fluorescent material according to claim 7, wherein the value of the parameters a and b are values satisfying the following requirement (4):

$$0.7 < b < a \leq 0.5b + 0.5 < 1.0 \qquad (4).$$

Patentansprüche

1. Ein Aluminatfluoreszenzmaterial mit einer Zusammensetzung, enthaltend ein erstes Element, welches ein oder mehrere Elemente, ausgewählt aus Ba und Sr enthält, und ein zweites Element, welches Mg und Mn enthält, wobei:

   in der Zusammensetzung des Aluminatfluoreszenzmaterials, wenn das Molverhältnis von Al als 10 angenommen wird, das Gesamtmolverhältnis des ersten Elements ein Wert eines Parameters a ist, das Gesamtmolverhältnis des zweiten Elements ein Wert eines Parameters b ist, das Molverhältnis von Sr ein Produkt eines Wertes eines Parameters m und des Wertes des Parameters a ist, das Molverhältnis von Mn ein Produkt eines Wertes eines Parameters n und des Wertes des Parameters b ist,
   der Wert der Parameter a und b die folgende Bedingung (1) erfüllt, der Wert des Parameters m die folgende Bedingung (2) erfüllt und der Wert des Parameters n die folgende Bedingung (3) erfüllt:

$$0,5 < b < a \leq 0,5b + 0,5 < 1,0 \qquad (1),$$

$$0 \leq m \leq 1,0 \qquad (2),$$

   und

$$0,4 \leq n \leq 0,7 \qquad (3).$$

2. Das Aluminatfluoreszenzmaterial gemäß Anspruch 1, welches eine Zusammensetzung aufweist, dargestellt durch die folgende Formel (I):

$$(Ba_{1-m},Sr_m)_a(Mg_{1-n},Mn_n)_bAl_{10}O_{15+a+b} \qquad (I)$$

   wobei a, b, m und n jeweils eine Zahl darstellen, welche $0,5 < b < a \leq 0,5b + 0,5 < 1,0$, $0 \leq m \leq 1,0$ und $0,4 \leq n \leq 0,7$ erfüllt.

3. Das Aluminatfluoreszenzmaterial gemäß Anspruch 1 oder 2, wobei der Wert der Parameter a und b jeweils die folgende Bedingung (4) erfüllt:

$$0,7 < b < a \leq 0,5b + 0,5 < 1,0 \qquad (4).$$

4. Eine lichtemittierende Vorrichtung, umfassend das Aluminatfluoreszenzmaterial gemäß einem der Ansprüche 1 bis 3 und eine Anregungslichtquelle.

5. Die lichtemittierende Vorrichtung gemäß Anspruch 4, wobei die Anregungslichtquelle ein Emissionsspektrum innerhalb eines Bereichs von 380 nm oder mehr und 485 nm oder weniger aufweist.

6. Die lichtemittierende Vorrichtung gemäß Anspruch 4 oder 5, wobei die Anregungslichtquelle eine Emissions-Peakwellenlänge innerhalb eines Bereichs von 420 nm oder mehr und 470 nm oder weniger aufweist.

7. Ein Verfahren zur Herstellung eines Aluminatfluoreszenzmaterials, welches das Mischen und Wärmebehandeln

von Verbindungen, enthaltend Elemente, beinhaltet, um eine Zusammensetzung bereitzustellen, welche ein erstes Element, das ein oder mehrere Elemente augewählt aus Ba und Sr enthält, ein zweites Element, das Mg und Mn enthält, und Al und O enthält, wobei:

in der Zusammensetzung, wenn das Molverhältnis von Al als 10 angenommen wird, das Gesamtmolverhältnis des ersten Elements ein Wert eines Parameters a ist, das Gesamtmolverhältnis des zweiten Elements ein Wert eines Parameters b ist, das Molverhältnis von Sr ein Produkt eines Wertes eines Parameters m und des Wertes des Parameters a ist, das Molverhältnis von Mn ein Produkt eines Wertes eines Parameters n und des Wertes des Parameters b ist,
der Wert der Parameter a und b die folgende Bedingung (1) erfüllt, der Wert des Parameters m die folgende Bedingung (2) erfüllt und der Wert des Parameters n die folgende Bedingung (3) erfüllt:

$$0{,}5 < b < a \leq 0{,}5b + 0{,}5 < 1{,}0 \qquad (1),$$

$$0 \leq m \leq 1{,}0 \qquad (2),$$

und

$$0{,}4 \leq n \leq 0{,}7 \qquad (3).$$

8. Das Verfahren zur Herstellung eines Aluminatfluoreszenzmaterials gemäß Anspruch 7, wobei der Wert der Parameter a und b Werte sind, welche die folgende Bedingung (4) erfüllen:

$$0{,}7 < b < a \leq 0{,}5b + 0{,}5 < 1{,}0 \qquad (4).$$

Revendications

1. Matériau fluorescent de type aluminate ayant une composition contenant un premier élément qui contient un ou plusieurs éléments choisis parmi Ba et Sr, et un deuxième élément qui contient Mg et Mn, dans lequel :

dans la composition du matériau fluorescent de type aluminate, quand le rapport molaire de l'Al est considéré être de 10, le rapport molaire du premier élément est une valeur d'un paramètre a, le rapport molaire total du deuxième élément est une valeur d'un paramètre b, le rapport molaire du Sr est le produit de la valeur d'un paramètre m et de la valeur du paramètre a, le rapport molaire du Mn est le produit de la valeur d'un paramètre n et de la valeur du paramètre b,
les valeurs des paramètres a et b satisfont à l'exigence (1) qui suit, la valeur du paramètre m satisfait à l'exigence (2) qui suit, et la valeur du paramètre n satisfait à l'exigence (3) qui suit :

$$0{,}5 < b < a \leq 0{,}5b + 0{,}5 < 1{,}0 \qquad (1),$$

$$0 \leq m \leq 1{,}0 \qquad (2),$$

et

$$0{,}4 \leq n \leq 0{,}7 \qquad (3).$$

2. Matériau fluorescent de type aluminate selon la revendication 1, qui a une composition représentée par la formule (I) suivante :

$$(Ba_{1-m},Sr_m)_a(Mg_{1-n},Mn_n)_bAl_{10}O_{15+a+b} \qquad (I)$$

dans laquelle chacun de a, b, m et n est un nombre satisfaisant à $0,5 < b < a \leq 0,5b + 0,5 < 1,0$, $0 \leq m \leq 1,0$ et $0,4 \leq n \leq 0,7$.

3. Matériau fluorescent de type aluminate selon la revendication 1 ou 2, dans lequel la valeur de chacun des paramètres a et b satisfait à l'exigence (4) suivante :

$$0,7 < b < a \leq 0,5b + 0,5 < 1,0 \ (4).$$

4. Dispositif luminescent comprenant le matériau fluorescent de type aluminate de l'une quelconque des revendications 1 à 3, et une source de lumière d'excitation.

5. Dispositif luminescent selon la revendication 4, dans lequel la source de lumière d'excitation a un spectre d'émission situé dans la plage allant de 380 nm ou plus à 485 nm ou moins.

6. Dispositif luminescent selon la revendication 4 ou 5, dans lequel la source de lumière d'excitation a une longueur d'onde de pic d'émission située dans la plage allant de 420 nm ou plus à 470 nm ou moins.

7. Procédé de production d'un matériau fluorescent de type aluminate, qui comprend le mélange et le traitement à la chaleur de composés qui contiennent des éléments de façon à donner une composition contenant un premier élément qui contient un ou plusieurs éléments choisis parmi Ba et Sr, un deuxième élément qui contient Mg et Mn, et Al et O, dans lequel :

dans la composition, quand le rapport molaire de l'Al est considéré être de 10, le rapport molaire du premier élément est une valeur d'un paramètre a, le rapport molaire total du deuxième élément est une valeur d'un paramètre b, le rapport molaire du Sr est le produit de la valeur d'un paramètre m et de la valeur du paramètre a, le rapport molaire du Mn est le produit de la valeur d'un paramètre n et de la valeur du paramètre b, les valeurs des paramètres a et b satisfont à l'exigence (1) qui suit, la valeur du paramètre m satisfait à l'exigence (2) qui suit, et la valeur du paramètre n satisfait à l'exigence (3) qui suit :

$$0,5 < b < a \leq 0,5b + 0,5 < 1,0 \qquad (1),$$

$$0 \leq m \leq 1,0 \qquad (2),$$

et

$$0,4 \leq n \leq 0,7 \qquad (3).$$

8. Procédé de production d'un matériau fluorescent de type aluminate selon la revendication 7, dans lequel les valeurs des paramètres a et b sont des valeurs satisfaisant à l'exigence (4) suivante :

$$0,7 < b < a \leq 0,5b + 0,5 < 1,0 \ (4).$$

FIG. 1

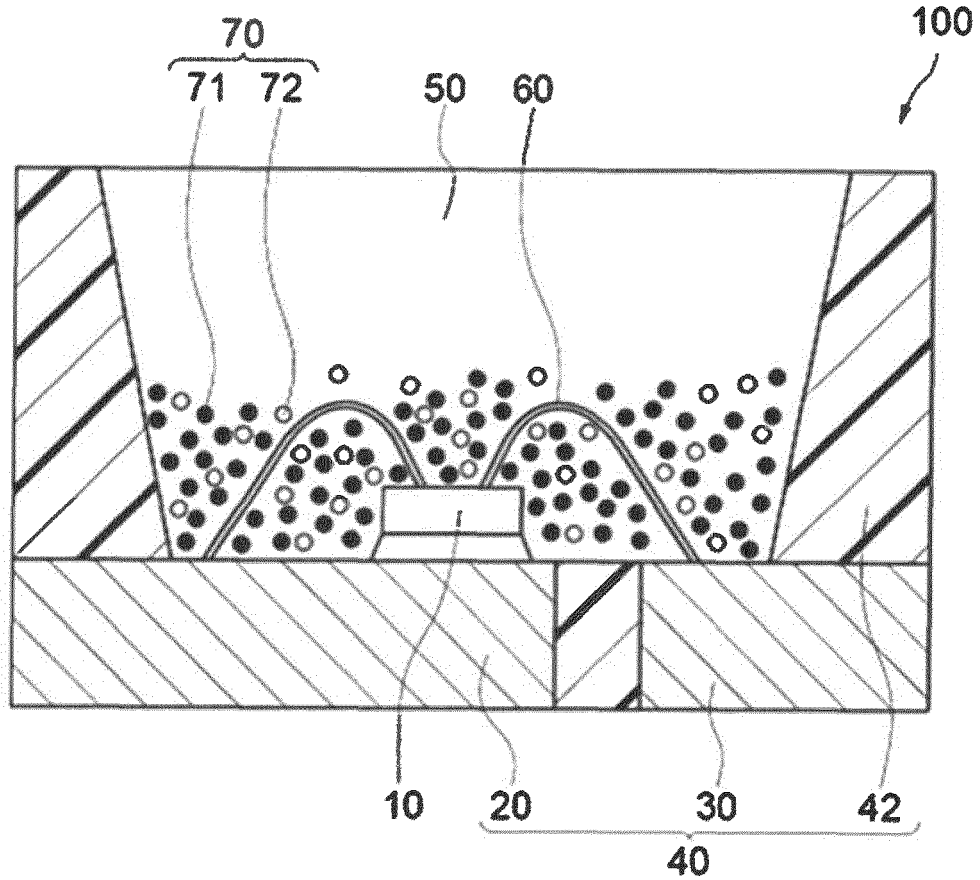

FIG. 2

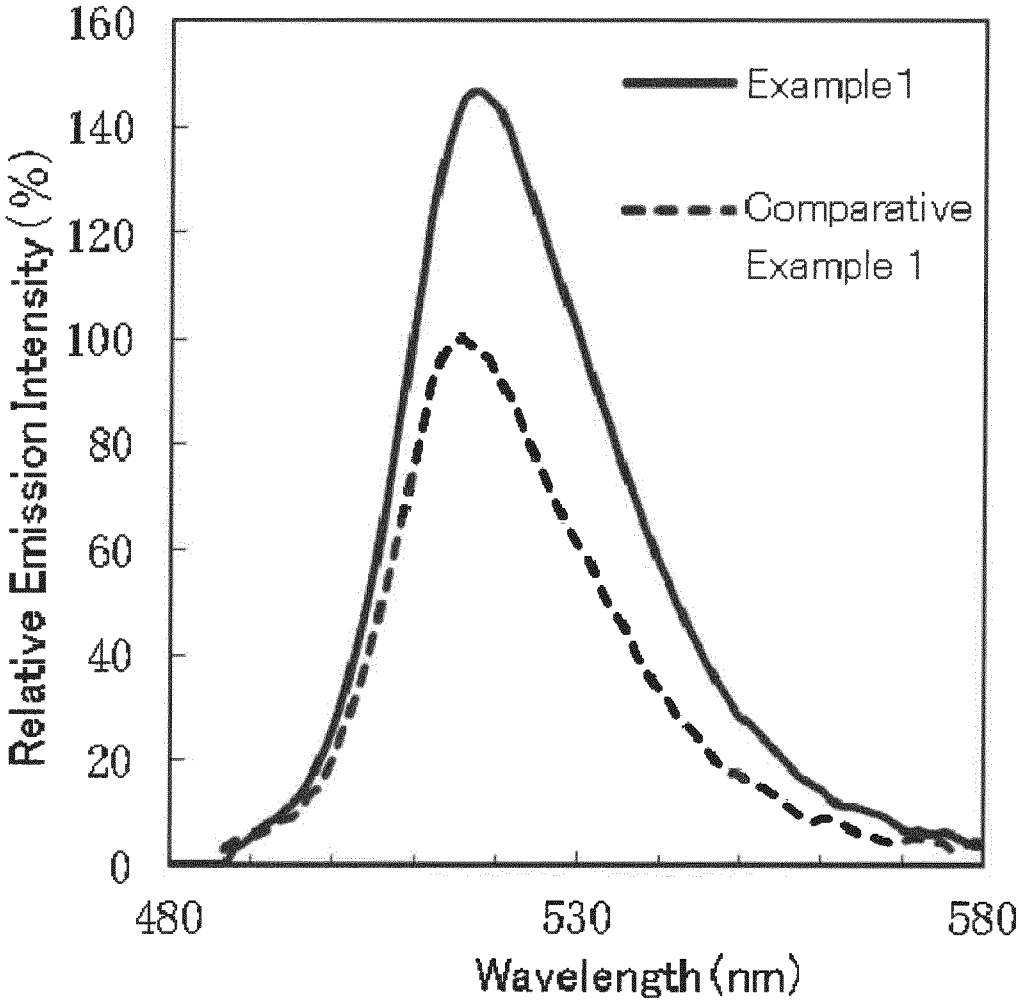
160
140
120
100
80
60
40
20
0
Relative Emission Intensity (%)
480
530
580
Wavelength (nm)
Example1
Comparative
Example 1

FIG. 3

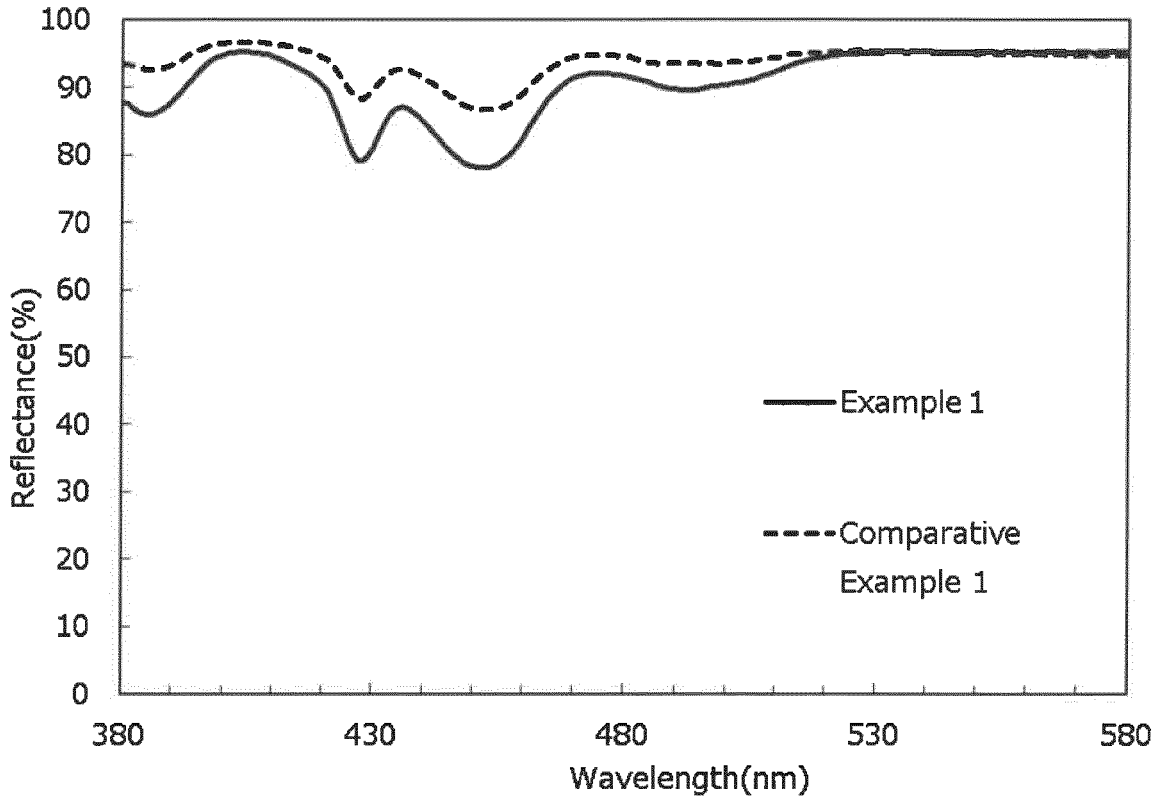
100
90
80
70
60
50
40
30
20
10
0
Reflectance(%)
380
430
480
530
580
Wavelength(nm)
Example 1
Comparative Example 1

REFERENCES CITED IN THE DESCRIPTION

This list of references cited by the applicant is for the reader's convenience only. It does not form part of the European patent document. Even though great care has been taken in compiling the references, errors or omissions cannot be excluded and the EPO disclaims all liability in this regard.

Patent documents cited in the description

- JP 2004155907 A **[0003] [0004] [0022]**

专利名称(译)	铝酸盐荧光材料，使用其的发光装置，以及制造铝酸盐荧光材料的方法		
公开(公告)号	EP3260517B1	公开(公告)日	2018-11-14
申请号	EP2017174766	申请日	2017-06-07
申请(专利权)人(译)	日亚公司		
当前申请(专利权)人(译)	日亚公司		
[标]发明人	YOSHIDA TOMOKAZU NISHIMATA KAZUYA HOSOKAWA SHOJI		
发明人	YOSHIDA, TOMOKAZU NISHIMATA, KAZUYA HOSOKAWA, SHOJI		
IPC分类号	C09K11/64		
CPC分类号	C09K11/643 C09K11/576 H01L33/502 H01L2224/48247 H01L2224/48257 H01L2224/73265		
优先权	2016115062 2016-06-09 JP 2017054756 2017-03-21 JP		
其他公开文献	EP3260517A1		
外部链接	Espacenet		

摘要(译)
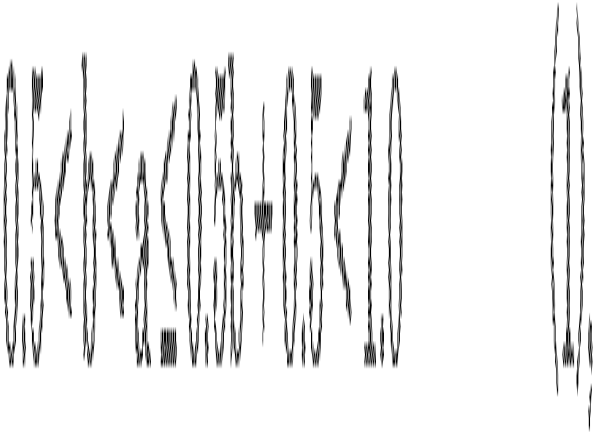
本发明提供一种具有高发光强度的铝酸盐荧光材料，发光装置和制造铝酸盐荧光材料的方法。铝酸盐荧光材料具有含有第一元素的组合物，该第一元素含有选自Ba和Sr的一种或多种元素，和含有Mg和Mn的第二元素，其中在铝酸盐荧光材料的组合物中，当Al的摩尔比为在图10中，第一元素的总摩尔比是参数a的值，第二元素的总摩尔比是参数b的值，Sr的摩尔比是参数m的值的乘积和参数a的值，Mn的摩尔比是参数n的值与参数b的值的乘积，参数a和b的值满足以下要求（1），其值为参数m满足以下要求（2），参数n的值满足下列要求（3）：0.5 <b <a‰0.5 b + 0.5 <1.0 0‰m‰1.0和0.4‰n ‰0.7