(19) Europäisches Patentamt
European Patent Office
Office européen des brevets

(11) EP 1 628 283 B1

(12) **EUROPEAN PATENT SPECIFICATION**

(45) Date of publication and mention of the grant of the patent:
04.10.2017 Bulletin 2017/40

(21) Application number: **04734390.0**

(22) Date of filing: **21.05.2004**

(51) Int Cl.:
G09G 3/30 *(2006.01)* ***G09G 3/20*** *(2006.01)*

(86) International application number:
PCT/JP2004/007304

(87) International publication number:
WO 2004/104975 (02.12.2004 Gazette 2004/49)

(54) **PIXEL CIRCUIT, DISPLAY UNIT, AND PIXEL CIRCUIT DRIVE METHOD**

PIXEL-SCHALTUNG, DISPLAY-EINHEIT UND PIXEL-SCHALTUNGS-ANSTEUERVERFAHREN

CIRCUIT DE PIXELS, UNITÉ D'AFFICHAGE ET PROCÉDÉ D'ACTIVATION D'UN CIRCUIT DE PIXELS

(84) Designated Contracting States:
DE FR GB

(30) Priority: **23.05.2003 JP 2003146758**

(43) Date of publication of application:
22.02.2006 Bulletin 2006/08

(60) Divisional application:
15192807.4 / 2 996 108

(73) Proprietor: **Sony Corporation**
Tokyo 141-0001 (JP)

(72) Inventors:
- **UCHINO, Katsuhide**
  Sony Corporation
  Tokyo 141-0001 (JP)
- **YAMASHITA, Junichi**
  Sony Corporation
  Tokyo 141-0001 (JP)
- **YAMAMOTO, Tetsuro**
  Sony Corporation
  Tokyo 141-0001 (JP)

(74) Representative: **Witte, Weller & Partner**
Patentanwälte mbB
Postfach 10 54 62
70047 Stuttgart (DE)

(56) References cited:
EP-A1- 1 130 565
JP-A- 2002 297 083
JP-A- 2003 108 075
US-A1- 2002 195 968
WO-A1-02/075713
JP-A- 2003 058 106
JP-A- 2003 108 075

Note: Within nine months of the publication of the mention of the grant of the European patent in the European Patent Bulletin, any person may give notice to the European Patent Office of opposition to that patent, in accordance with the Implementing Regulations. Notice of opposition shall not be deemed to have been filed until the opposition fee has been paid. (Art. 99(1) European Patent Convention).

Printed by Jouve, 75001 PARIS (FR)

Description

TECHNICAL FIELD

[0001] The present invention relates to a pixel circuit having an electro-optic element with a luminance controlled by a current value in an organic EL (electroluminescence) display etc., an image display device comprised of such pixel circuits arrayed in a matrix, in particular a so-called active matrix type image display device controlled in value of current flowing through the electro-optic elements by insulating gate type field effect transistors provided inside the pixel circuits, and a method of driving a pixel circuit.

BACKGROUND ART

[0002] In an image display device, for example, a liquid crystal display, a large number of pixels are arranged in a matrix and the light intensity is controlled for every pixel in accordance with the image information to be displayed so as to display an image.

[0003] This same is true for an organic EL display etc. An organic EL display is a so-called self-light emitting type display having a light emitting element in each pixel circuit and has the advantages that the viewability of the image is higher in comparison with a liquid crystal display, a backlight is unnecessary, the response speed is high, etc.

[0004] Further, it greatly differs from a liquid crystal display etc. in the point that the gradations of the color generation are obtained by controlling the luminance of each light emitting element by the value of the current flowing through the light emitting element, that is, each light emitting element is a current controlled type.

[0005] An organic EL display, in the same way as a liquid crystal display, may be driven by a simple matrix and an active matrix system. While the former has a simple structure, it has the problem that realization of a large sized and high definition display is difficult. For this reason, much effort is being devoted to development of the active matrix system of controlling the current flowing through the light emitting element inside each pixel circuit by an active element provided inside the pixel circuit, generally, a TFT (thin film transistor).

[0006] FIG. 1 is a block diagram of the configuration of a general organic EL display device.

[0007] This display device 1 has, as shown in FIG. 1, a pixel array portion 2 comprised of pixel circuits (PXLC) 2a arranged in an m x n matrix, a horizontal selector (HSEL) 3, a write scanner (WSCN) 4, data lines DTL1 to DTLn selected by the horizontal selector 3 and supplied with a data signal in accordance with the luminance information, and scanning lines WSL1 to WSLm selectively driven by the write scanner 4.

[0008] Note that the horizontal selector 3 and the write scanner 4 are sometimes formed around the pixels by MOSICs etc. when formed on polycrystalline silicon.

[0009] FIG. 2 is a circuit diagram of an example of the configuration of a pixel circuit 2a of FIG. 1 (refer to for example U.S. Patent No. 5,684,365 and Patent Publication 2: Japanese Unexamined Patent Publication (Kokai) No. 8-234683).

[0010] The pixel circuit of FIG. 2 has the simplest circuit configuration among the large number of proposed circuits and is a so-called two-transistor drive type circuit.

[0011] The pixel circuit 2a of FIG. 2 has a p-channel thin film FET (hereinafter, referred to as TFT) 11 and TFT 12, a capacitor C11, and a light emitting element constituted by an organic EL element (OLED) 13. Further, in FIG. 2, DTL indicates a data line, and WSL indicates a scanning line.

[0012] An organic EL element has a rectification property in many cases, so sometimes is referred to as an OLED (organic light emitting diode). The symbol of a diode is used as the light emitting element in FIG. 2 and the other figures, but a rectification property is not always required for an OLED in the following explanation.

[0013] In the pixel circuit 2a of FIG. 2, a source of the TFT 11 is connected to a power source potential VCC, and a cathode of the light emitting element 13 is connected to a ground potential GND. The operation of the pixel circuit 2a of FIG. 2 is as follows.

<Step ST1>:

[0014] When the scanning line WSL is made a selected state (low level here) and a write potential Vdata is supplied to the data line DTL, the TFT 12 becomes conductive, the capacitor C11 is charged or discharged, and the gate potential of the TFT 11 becomes Vdata.

<Step ST2>:

[0015] When the scanning line WSL is made a non-selected state (high level here), the data line DTL and the TFT 11 are electrically separated, but the gate potential of the TFT 11 is held stably by the capacitor C11.

<Step ST3>:

[0016] The current flowing through the TFT 11 and the light emitting element 13 becomes a value in accordance with a gate-source voltage Vgs of the TFT 11, while the light emitting element 13 is continuously emitting light with a luminance in accordance with the current value.

[0017] As in the above step ST1, the operation of selecting the scanning line WSL and transmitting the luminance information given to the data line to the inside of a pixel will be referred to as "writing" below.

[0018] As explained above, in the pixel circuit 2a of FIG. 2, if once the Vdata is written, the light emitting element 13 continues to emit light with a constant luminance in the period up to the next rewrite operation.

[0019] As explained above, in the pixel circuit 2a, by changing a gate application voltage of the drive transistor constituted by the TFT 11, the value of the current flowing through the EL element 13 is controlled.

[0020] At this time, the source of the p-channel drive transistor is connected to the power source potential Vcc, so this TFT 11 is always operating in a saturated region. Accordingly, it becomes a constant current source having a value shown in the following equation 1.

$$Ids = 1/2 \cdot \mu(W/L)Cox(Vgs-|Vth|)^2 \qquad (1)$$

[0021] Here, μ indicates the mobility of a carrier, Cox indicates a gate capacitance per unit area, W indicates a gate width, L indicates a gate length, and Vth indicates the threshold value of the TFT 11.

[0022] In a simple matrix type image display device, each light emitting element emits light only at a selected instant, while in an active matrix, as explained above, each light emitting element continues emitting light even after the end of the write operation. Therefore, it becomes advantageous in especially a large sized and high definition display in the point that the peak luminance and peak current of each light emitting element can belowered in comparison with a simple matrix.

[0023] FIG. 3 is a view of the change along with elapse of the current-voltage (I-V) characteristic of an organic EL element. In FIG. 3, the curve shown by the solid line indicates the characteristic in the initial state, while the curve shown by the broken line indicates the characteristic after change with elapse.

[0024] In general, the I-V characteristic of an organic EL element ends up deteriorating along with elapse as shown in FIG. 3.

[0025] However, since the two-transistor drive system of FIG. 2 is a constant current drive system, a constant current is continuously supplied to the organic EL element as explained above. Even if the I-V characteristic of the organic EL element deteriorates, the luminance of the emitted light will not change along with elapse.

[0026] The pixel circuit 2a of FIG. 2 is comprised of p-channel TFTs, but if it were possible to configure it by n-channel TFTs, it would be possible to use an amorphous silicon (a-Si) process in the past in the fabrication of the TFTs. This would enable a reduction in the cost of TFT boards.

[0027] Next, consider a pixel circuit replacing the transistors with n-channel TFTs.

[0028] FIG. 4 is a circuit diagram of a pixel circuit replacing the p-channel TFTs of the circuit of FIG. 2 with n-channel TFTs.

[0029] The pixel circuit 2b of FIG. 4 has an n-channel TFT 21 and TFT 22, a capacitor C21, and a light emitting element constituted by an organic EL element (OLED) 23. Further, in FIG. 4, DTL indicates a data line, and WSL indicates a scanning line.

[0030] In the pixel circuit 2b, the drain side of the drive transistor constituted by the TFT 21 is connected to the power source potential Vcc, and the source is connected to the anode of the organic EL light emitting element 23, whereby a source-follower circuit is formed.

[0031] FIG. 5 is a view of the operating point of a drive transistor constituted by the TFT 21 and an EL element 23 in the initial state. In FIG. 5, the abscissa indicates the drain-source voltage Vds of the TFT 21, while the ordinate indicates the drain-source current Ids.

[0032] As shown in FIG. 5, the source voltage is determined by the operating point of the drive transistor constituted by the TFT 21 and the EL light emitting element 23. The voltage differs in value depending on the gate voltage.

[0033] This TFT 21 is driven in the saturated region, so a current Ids of the value of the above equation 1 is supplied for the Vgs for the source voltage of the operating point.

[0034] However, here too, similarly, the I-V characteristic of the organic EL element ends up deteriorating along with elapse. As shown in FIG. 6, the operating point ends up fluctuating due to this deteriorating along with elapse. The source voltage fluctuates even if supplying the same gate voltage.

[0035] Due to this, the gate-source voltage Vgs of the drive transistor constituted by the TFT 21 ends up changing and the value of the current flowing fluctuates. The value of the current flowing through the organic EL element 23

simultaneously changes, so if the I-V characteristic of the organic EL element 23 deteriorates, the luminance of the emitted light will end up changing along with elapse in the source-follower circuit of FIG. 4.

[0036] Further, as shown in FIG. 7, a circuit configuration where the source of the drive transistor constituted by the n-channel TFT 21 is connected to the ground potential GND, the drain is connected to the cathode of the organic EL light emitting element 23, and the anode of the organic EL light emitting element 23 is connected to the power source potential Vcc may be considered.

[0037] With this system, in the same way as when driven by the p-channel TFT of FIG. 2, the potential of the source is fixed, the drive transistor constituted by the TFT 21 operates as a constant current source, and a change in the luminance due to deterioration of the I-V characteristic of the organic EL element can be prevented.

[0038] With this system, however, the drive transistor has to be connected to the cathode side of the organic EL light emitting element. This cathodic connection requires development of new anode-cathode electrodes. This is considered extremely difficult with the current level of technology.

[0039] From the above, in the past systems, no organic EL light emitting element using a n-channel transistor free of change in luminance has been developed.

[0040] Another example of a pixel circuit for driving an electro-optic element is given by the prior art document US2002/195968.

DISCLOSURE OF THE INVENTION

[0041] An object of the present invention is to provide a pixel circuit, display device, and method of driving a pixel circuit enabling source-follower output with no deterioration of luminance even with a change of the current-voltage characteristic of the light emitting element along with elapse, enabling a source-follower circuit of n-channel transistors, and able to use an n-channel transistor as an EL element transistor while using current anode-cathode electrodes.

[0042] To achieve the above object, according to a first aspect of the present invention, there is provided a pixel circuit for driving an electro-optic element with a luminance changing according to a flowing current, comprising a data line through which a data signal in accordance with luminance information is supplied; a first control line; first and second nodes; first and second reference potentials; a drive transistor with a drain connected to said first reference potential or second reference potential, and a gate connected to said second node, said drive transistor forming a current supply line between the first terminal and the second terminal and controlling a current flowing through the current supply line in accordance with the potential of a control terminal connected to the second node; a pixel capacitance element connected between the first node and the second node; a first switch connected between the data line and either of a first terminal or second terminal of the pixel capacitance element and controlled in conduction by the first control line; and a first circuit for making a potential of the first node change to a fixed potential while the electro-optic element is not emitting light; the current supply line of the drive transistor, the first node, and the electro-optic element being connected in series between the first reference potential and second reference potential.

[0043] Preferably, the circuit further comprises a second control line; the drive transistor is a field effect transistor with a source connected to the first node; and the first circuit includes a second switch connected between the first node and fixed potential and is controlled in conduction by the second control line.

[0044] Preferably, when the electro-optic element is driven, as a first stage, the first switch is held in a non-conductive state by the first control line, the second switch is held in a conductive state by the second control line, and the first node is connected to a fixed potential; as a second stage, the first switch is held in a conductive state by the first control line, data to be propagated over the data line is written in the pixel capacitance element, then the first switch is held in a non-conductive state; and as a third stage, the second switch is held in a non-conductive state by the second control line.

[0045] Preferably, the circuit further comprises a second control line; and the first circuit includes a second switch connected between a source of the field effect transistor and an electro-optic element and is controlled in conduction by the second control line.

[0046] Preferably, when the electro-optic element is driven, as a first stage, the first switch is held in a non-conductive state by the first control line, and the second switch is held in a non-conductive state by the second control line; as a second stage, the first switch is held in a conductive state by the first control line, data to be propagated over the data line is written in the pixel capacitance element, then the first switch is held in a non-conductive state; and as a third stage, the second switch is held in a conductive state by the second control line.

[0047] Preferably, the circuit further comprises a second control line; the drive transistor is a field effect transistor with a source connected to the first node; and the first circuit includes a second switch connected between the first node and the electro-optic element and is controlled in conduction by the second control line.

[0048] Preferably, when the electro-optic element is driven, as a first stage, the first switch is held in a non-conductive state by the first control line, and the second switch is held in a non-conductive state by the second control line; as a second stage, the first switch is held in a conductive state by the first control line, data to be propagated over the data line is written in the pixel capacitance element, then the first switch is held in a non-conductive state; and as a third

stage, the second switch is held in a conductive state by the second control line.

[0049] Preferably, the circuit further has a second circuit making the first node be held at a fixed potential when the first switch is held in a conductive state and writes data propagated through the data line.

[0050] Preferably, the circuit further comprises second and third control lines and a voltage supply; the first circuit includes a second switch connected between a source of the field effect transistor and the electro-optic element and is controlled in conduction by the second control line; and the second circuit includes a third switch connected between the first node and the voltage source and is controlled in conduction by the third control line.

[0051] Preferably, when the electro-optic element is driven, as a first stage, the first switch is held in a non-conductive state by the first control line, the second switch is held in a non-conductive state by the second control line, and the third switch is held in a non-conductive state by the third control line; as a second stage, the first switch is held in a conductive state by the first control line, the third switch is held in a conductive state by the third control line, the first node is held at a predetermined potential, and, in that state, data to be propagated over the data line is written in the pixel capacitance element, then the first switch is held in a non-conductive state by the first control line; and as a third stage, the third switch is held in a non-conductive state by the third control line and the second switch is held in a conductive state by the second control line.

[0052] Preferably, the circuit further has second and third control lines and a voltage source; the drive transistor is a field effect transistor with a source connected to the first node; the first circuit includes a second switch connected between the first node and the electro-optic element and controlled in conduction by the second control line; and the second circuit includes a third switch connected between the first node and the voltage source and is controlled in conduction by the third control line.

[0053] Preferably, when the electro-optic element is driven, as a first stage, the first switch is held in a non-conductive state by the first control line, the second switch is held in a non-conductive state by the second control line, and the third switch is held in a non-conductive state by the third control line; as a second stage, the first switch is held in a conductive state by the first control line, the third switch is held in a conductive state by the third control line, the first node is held at a predetermined potential, and, in that state, data to be propagated over the data line is written in the pixel capacitance element, then the first switch is held in a non-conductive state by the first control line; and as a third stage, the third switch is held in a non-conductive state by the third control line and the second switch is held in a conductive state by the second control line.

[0054] Preferably, the circuit further has a second circuit making the second node be held at a fixed potential when the first switch is held in a conductive state and writes data propagated through the data line.

[0055] Further, the fixed potential is the first reference potential or second reference potential.

[0056] Preferably, the circuit further comprises second, third, and fourth control lines; the drive transistor is a field effect transistor with a source connected to the first node; the first circuit includes a second switch connected between the first node and the electro-optic element and is controlled in conduction by the second control line and a third switch connected between a source of the field effect transistor and the first node and is controlled in conduction by the third control line; and the second circuit includes a fourth switch connected betweend the first node and the fixed potential and is controlled in conduction by the fourth control line.

[0057] Further, preferably when the electro-optic element is driven, as a first stage, the first switch is held in a non-conductive state by the first control line, the second switch is held in a non-conductive state by the second control line, the third switch is held in a non-conductive state by the third control line, and the fourth switch is held in a non-conductive state by the fourth control line; as a second stage, the first switch is held in a conductive state by the first control line, the fourth switch is held in a conductive state by the fourth control line, the second node is held at a fixed potential, and, in that state, data to be propagated over the data line is written in the pixel capacitance element, then the first switch is held in a non-conductive state by the first control line, and the fourth switch is held at a non-conductive state by the fourth control line; and as a third stage, the second switch is held in a conductive state by the second control line and the third switch is held in a conductive state by the third control line.

[0058] According to a second aspect of the present invention, there is provided a display device comprising a plurality of pixel circuits arranged in a matrix; a data line arranged for each column of the matrix array of pixel circuits and through which a data signal in accordance with luminance information is supplied; a first control line arranged for each row of the matrix array of pixel circuits; and first and second reference potentials; each pixel circuit further having an electro-optic element with a luminance changing according to a flowing current, first and second nodes, a drive transistor with a drain connected to said first reference potential or second reference potential, and a gate connected to said second node, said drive transistor forming a current supply line between a first terminal and a second terminal and controlling a current flowing through the current supply line in accordance with the potential of a control terminal connected to the second node, a pixel capacitance element connected between the first node and the second node, a first switch connected between the data line and the second node and controlled in conduction by the first control line, and a first circuit for making a potential of the first node change to a fixed potential while the electro-optic element is not emitting light, the current supply line of the drive transistor, the first node, and the electro-optic element being connected in series between

the first reference potential and second reference potential.

[0059] According to a third aspect of the present invention, there is provided a method of driving a pixel circuit having an electro-optic element with a luminance changing according to a flowing current; a data line through which a data signal in accordance with luminance information is supplied; first and second nodes; first and second reference potentials; a field effect transistor with a drain connected to the first reference potential or second reference potential, a source connected to the first node, and a gate connected to the second node; said field effect transistor forming a current supply line between a first terminal and a second terminal and controlling a current flowing through said current supply line in accordance with the potential of a control terminal connected to said second node; a pixel capacitance element connected between the first node and the second node; a first switch connected between the data line and either of a first terminal or a second terminal of the pixel capacitance element; and a first circuit for making a potential of the first node change to a fixed potential; the current supply line of the drive transistor, the first node, and the electro-optic element being connected in series between the first reference potential and second reference potential, comprising steps of making a potential of the first node change to a fixed potential by the first circuit in the state with the first switch held at a non-conductive state, holding the first switch at a conductive state, writing data propagated over the data line in the pixel capacitance element, then holding the first switch in the non-conductive, and stopping the operation for making a potential of the first node of said first circuit change to a fixed potential.

[0060] According to the present invention, since for example the source electrode of a drive transistor is connected to a fixed potential through a switch and there is a pixel capacitor between the gate and source of the drive transistor, the change in luminance due to the change in the I-V characteristic of a light emitting element along with elapse is corrected.

[0061] When the drive transistor is an n-channel transistor, by making the fixed potential a ground potential, the potential applied to the light emitting element is made the ground potential so as to create a non-emitting period of the light emitting element.

[0062] Further, by adjusting the off period of the second switch connecting the source electrode and ground potential, the emitting and non-emitting periods of the light emitting element are adjusted for duty driving.

[0063] Further, by making the fixed potential close to the ground potential or a potential lower than that or by raising the gate voltage, deterioration of the image quality due to fluctuation in the threshold voltage Vth of the switching transistor connected to the fixed potential is suppressed.

[0064] Further, when the drive transistor is a p-channel transistor, by making the fixed potential the potential of the power source connected to the cathode electrode of the light emitting element, the potential applied to the light emitting element is made the power source potential so as to create a non-emitting period of the EL element.

[0065] Further, by making the characteristic of the drive transistor an n-channel type, a source-follower circuit becomes possible and anodic connection becomes possible.

[0066] Further, making all of the drive transistors n-channel transistors becomes possible, introduction of a general amorphous silicon process becomes possible, and reduction of the cost becomes possible.

[0067] Further, since the second switching transistor is laid out between the light emitting element and the drive transistor, current is not supplied to the drive transistor in the non-emitting period and therefore power consumption of the panel is suppressed.

[0068] Further, by using a potential of the cathode side of the light emitting element as the ground potential, for example, the second reference potential, there is no need to provide a GND line at the TFT side inside the panel.

[0069] Further, by being able to delete the GND lines of the TFT boards in the panel, layout in the pixels and layout of the peripheral circuits become easy.

[0070] Further, by being able to delete the GND lines of the TFT boards in the panel, there is no overlap between the power source potential (first reference potential) and ground potential (second reference potential) of the peripheral circuits, the Vcc lines can be laid out with a lower resistance, and a high uniformity can be achieved.

[0071] Further, by connecting for example a pixel capacitance element to the source of a drive transistor and boosting one side of the capacitor to the power source while not emitting light, there is no longer a need for a GND line at the TFT side at the inside of the panel.

[0072] Further, by turning the fourth switch at the power source line side on when writing in a signal line so as to lower the impedance, the coupling effect on pixel writing is corrected in a short time and an image of a high uniformity is obtained.

[0073] Further, by making the potential of the power source line the same as the Vcc potential, it is possible to reduce the panel lines.

[0074] Further, according to the present invention, by connecting the gate electrode of the drive transistor to a fixed potential through a switch and providing a pixel capacitor between the gate and source of the drive transistor, change of the luminance due to deterioration of the I-V characteristic of the light emitting element along with elapse is corrected.

[0075] For example, when the drive transistor is an n-channel, by making the fixed potential the fixed potential to which the drain electrode of the drive transistor is connected, the fixed potential is made only the power source potential in the pixel.

[0076] Further, by raising the gate voltages of the switching transistors connected to the gate side and source side of the drive transistor or making the transistors larger in size, deterioration of the image quality due to variation in the threshold values of the switching transistors is suppressed. Further, when the drive transistor is a p-channel, by making the fixed potential the fixed potential to which the drain electrode of the driven is connected, the fixed potential is made only GND in the pixel.

[0077] Further, by raising the gate voltages of the switching transistors connected to the gate side and source side of the drive transistor or making the transistors larger in size, deterioration of the image quality due to variation in the threshold values of the switching transistors is suppressed.

BRIEF DESCRIPTION OF THE DRAWINGS

[0078]

FIG. 1 is a block diagram of the configuration of a general organic EL display device.
FIG. 2 is a circuit diagram of an example of the configuration of a pixel circuit of FIG. 1.
FIG. 3 is a graph of the change along with elapse of the current-voltage (I-V) characteristic of an organic EL device.
FIG. 4 is a circuit diagram of a pixel circuit in which p-channel TFTs of the circuit of FIG. 2 are replaced by n-channel TFTs.
FIG. 5 is a graph showing the operating point of a drive transistor constituted by a TFT and an EL light emitting elment in the initial state.
FIG. 6 is a graph showing the operating point of a drive transistor constituted by a TFT and an EL light emitting element after change along with elapse.
FIG. 7 is a circuit diagram of a pixel circuit connecting a source of a drive transistor constituted by an n-channel TFT to a ground potential.
FIG. 8 is a block diagram of the configuration of an organic EL display device employing a pixel circuit according to a first embodiment of.
FIG. 9 is a circuit diagram of a specific configuration of a pixel circuit according to the first embodiment in the organic EL display device of FIG. 1.
FIGS. 10A to 10F are views of equivalent circuits for explaining the operation of the circuit of FIG. 9.
FIGS. 11A to 11F are timing charts for explaining the operation of the circuit of FIG. 9.
FIG. 12 is a block diagram of the configuration of an organic EL display device employing a pixel circuit according to a second embodiment.
FIG. 13 is a circuit diagram of a specific configuration of a pixel circuit according to the second embodiment in the organic EL display device of FIG. 12.
FIGS. 14A to 14E are views of equivalent circuits for explaining the operation of the circuit of FIG. 13.
FIGS. 15A to 15F are timing charts for explaining the operation of the circuit of FIG. 13.
FIG. 16 is a circuit diagram of another example of the configuration of a pixel circuit according to the second embodiment.
FIG. 17 is a block diagram of the configuration of an organic EL display device employing a pixel circuit according to a third embodiment.
FIG. 18 is a circuit diagram of a specific configuration of a pixel circuit according to the third embodiment in the organic EL display device of FIG. 17.
FIGS. 19A to 19E are views of equivalent circuits for explaining the operation of the circuit of FIG. 18.
FIGS. 20A to 20F are timing charts for explaining the operation of the circuit of FIG. 18.
FIGS. 21 is a circuit diagram of another example of the confuguration of a pixel circuit according to the third embodiment.
FIG. 22 is a block diagram of the configuration of an organic EL display device employing a pixel circuit according to a fourth embodiment.
FIG. 23 is a circuit diagram of a specific configuration of a pixel circuit according to the fourth embodiment in the organic EL display device of FIG. 22.
FIGS. 24A to 24E are views of equivalent circuits for explaining the operation of the circuit of FIG. 23.
FIGS. 25A to 25H are timing charts for explaining the operation of the circuit of FIG. 23.
FIG. 26 is a circuit diagram of a pixel circuit having a fixed voltage line as the power source potential VCC.
FIG. 27 is a circuit diagram of a pixel circuit having a fixed voltage line as the ground potential GND.
FIG. 28 is a circuit diagram of another example of the configuration of a pixel circuit according to the fourth embodiment.
FIG. 29 is a block diagram of the configuration of an organic EL display device employing a pixel circuit according to a fifth embodiment.

FIG. 30 is a circuit diagram of a specific configuration of a pixel circuit according to the fifth embodiment in the organic EL display device of FIG. 29.
FIGS. 31A to 31E are views of equivalent circuits for explaining the operation of the circuit of FIG. 30.
FIGS. 32A to 32H are timing charts for explaining the operation of the circuit of FIG. 30.
FIG. 33 is a circuit diagram of a pixel circuit having a fixed voltage line as the power source potential VCC.
FIG. 34 is a circuit diagram of a pixel circuit having a fixed voltage line as the ground potential GND.
FIG. 35 is a circuit diagram of another example of the configuration of a pixel circuit according to the fifth embodiment.
FIG. 36 is a block diagram of the configuration of an organic EL display device employing a pixel circuit according to a sixth embodiment.
FIG. 37 is a circuit diagram of a specific configuration of a pixel circuit according to the sixth embodiment in the organic EL display device of FIG. 36.
FIGS. 38A to 38F are views of equivalent circuits for explaining the operation of the circuit of FIG. 37.
FIG. 39 is a view of an equivalent circuit for explaining the operation of the circuit of FIG. 37.
FIGS. 40A to 40H are timing charts for explaining the operation of the circuit of FIG. 37.

BEST MODE FOR WORKING THE INVENTION

[0079] Below, preferred embodiments of the present invention will be described with reference to the accompanying drawings.

<First Embodiment>

[0080] FIG. 8 is a block diagram of the configuration of an organic EL display device employing pixel circuits according to the first embodiment.
[0081] FIG. 9 is a circuit diagram of the concrete configuration of a pixel circuit according to the first embodiment in the organic EL display device of FIG. 8.
[0082] This display device 100 has, as shown in FIG. 8 and FIG. 9, a pixel array portion 102 having pixel circuits (PXLC) 101 arranged in an m x n matrix, a horizontal selector (HSEL) 103, a write scanner (WSCN) 104, a drive scanner (DSCN) 105, data lines DTL101 to DTL10n selected by the horizontal selector 103 and supplied with a data signal in accordance with the luminance information, scanning lines WSL101 to WSL10m selectively driven by the write scanner 104, and drive lines DSL101 to DSL10m selectively driven by the drive scanner 105.
[0083] Note that while the pixel circuits 101 are arranged in an m x n matrix in the pixel array portion 102, FIG. 9 shows an example wherein the pixel circuits are arranged in a 2 (= m) x 3 (= n) matrix for the simplification of the drawing.
[0084] Further, in FIG. 9, the concrete configuration of one pixel circuit is shown for simplification of the drawing.
[0085] The pixel circuit 101 according to the first embodiment has, as shown in FIG. 9, an n-channel TFT 111 to TFT 113, a capacitor C111, a light emitting element 114 made of an organic EL element (OLED), and nodes ND111 and ND112.
[0086] Further, in FIG. 9, DTL101 indicates a data line, WSL101 indicates a scanning line, and DSL101 indicates a drive line.
[0087] Among these components, TFT 111 configures the field effect transistor according to the present invention, TFT 112 configures the first switch, TFT 113 configures the second switch, and the capacitor C111 configures the pixel capacitance element according to the present invention.
[0088] Further, the scanning line WSL101 corresponds to the first control line according to the present invention, while the drive line DSL101 corresponds to the second control line.
[0089] Further, the supply line (power source potential) of the power source voltage Vcc corresponds to the first reference potential, while the ground potential GND corresponds to the second reference potential.
[0090] In the pixel circuit 101, a light emitting element (OLED) 114 is connected between a source of the TFT 111 and the second reference potential (in this present embodiment, the ground potential GND). Specifically, the anode of the light emitting element 114 is connected to the source of the TFT 111, while the cathode side is connected to the ground potential GND. The connection point of the anode of the light emitting element 114 and the source of the TFT 111 constitutes a node ND111.
[0091] The source of the TFT 111 is connected to a drain of the TFT 113 and a first electrode of the capacitor C111, while the gate of the TFT 111 is connected to a node ND112.
[0092] The source of the TFT 113 is connected to a fixed potential (in the present embodiment, a ground potential GND), while the gate of the TFT 113 is connected to the drive line DSL101. Further, a second electrode of the capacitor C111 is connected to the node ND112.
[0093] A source and a drain of the TFT 112 as first switch are connected to the data line DTL101 and node ND112. Further, a gate of the TFT 112 is connected to the scanning line WSL101.
[0094] In this way, the pixel cicuit 101 according to the present embodiment is configured with a capacitor C111

connected between the gate and source of the TFT 111 as the drive transistor and with a source potential of the TFT 111 connected to a fixed potential through the TFT 113 as the switching transistor.

[0095] Next, the operation of the above configuration will be explained focusing on the operation of a pixel circuit with reference to FIGS. 10A to 10F and FIGS. 11A to 11F.

[0096] Note that FIG. 11A shows a scanning signal ws[101] applied to the first row scanning line WSL101 of the pixel array, FIG. 11B shows a scanning signal ws[102] applied to the second row scanning line WSL102 of the pixel array, FIG. 11C shows a drive signal ds[101] applied to the first row drive line DSL101 of the pixel array, FIG. 11D shows a drive signal ds[101] applied to the second row drive line DSL102 of the pixel array, FIG. 11E shows a gate potential Vg of the TFT 111, and FIG. 11F shows a source potential Vs of the TFT 111.

[0097] First, at the time of the ordinary emitting state of the EL light emitting element 114, as shown in FIGS. 11A to 11D, the scanning signals ws[101], ws[102],.. to the scanning lines WSL101, WSL102,... are selectively set to the low level by the write scanner 104, and the drive signals ds[101], ds[102],... to the drive lines DSL101, DSL102,... are selectively set to the low level by the drive scanner 105.

[0098] As a result, in the pixel circuits 101, as shown in FIG. 10A, the TFT 112 and TFT 113 are held in the off state.

[0099] Next, in the non-emitting period of the EL element 114, as shown in FIGS. 11A to 11D, the scanning signals ws[101], ws[102],.. to the scanning lines WSL101, WSL102,... are held at the low level by the write scanner 104, and the drive signals ds[101], ds[102],... to the drive lines DSL101, DSL102,... are selectively set to the high level by the drive scanner 105.

[0100] As a result, in the pixel circuits 101, as shown in FIG. 10B, the TFT 112 is held in the off state and the TFT 113 is turned off.

[0101] At this time, current flows through the TFT 113 and, as shown in FIG. 11F, the source potential Vs of the TFT 111 falls to the ground potential GND. Therefore, the voltage applied to the EL light emitting element 114 also becomes 0V and the EL light emitting element 114 becomes non-emitting in state.

[0102] Next, in the non-emitting period of the EL light emitting element 114, as shown in FIGS. 11A to 11D, the drive signals ds[101], ds[102],.. to the drive lines DSL101, DSL102,... are held at the high level by the drive scanner 105, and the scanning signals ws[101], ws[102],... to the scanning lines WSL101, WSL102,... are selectively set to the high level by the write scanner 104.

[0103] As a result, in the pixel circuits 101, as shown in FIG. 10C, the TFT 113 is held in the on state and the TFT 112 is turned on. Due to this, the horizontal selector 103 writes the input signal (Vin) propagated to the data line DTL101 into the capacitor C111 as the pixel capacitor.

[0104] At this time, as shown in FIG. 11F, the source potential Vs of the TFT 111 as the drive transistor is at the ground potential level (GND level), so, as shown in FIGS. 11E and 11F, the potential difference between the gate and source of the TFT 111 becomes equal to the voltage Vin of the input signal.

[0105] After this, in the non-emitting period of the EL light emitting element 114, as shown in FIGS. 11A to 11D, the drive signals ds[101], ds[102],... to the drive lines DSL101, DSL102,... are held at the high level by the drive scanner 105 and the scanning signals ws[101], ws[102],... to the scanning lines WSL101, WSL102,... are selectively set to the low level by the write scanner 104.

[0106] As a result, in the pixel circuit 101, as shown in FIG. 10D, the TFT 112 is turned off and the write operation of the input signal to the capacitor C111 as the pixel capacitor ends.

[0107] After this, as shown in FIGS. 11A to 11D, the scanning signals ws[101], ws[102],... to the scanning lines WSL101, WSL102,... are held at the low level by the write scanner 104 and the drive signals ds[101], ds[102],... to the drive lines DSL101, DSL102,... are selectively set to the low level by the drive scanner 104.

[0108] As a result, in the pixel circuit 101, as shown in FIG. 10E, the TFT 113 is turned off.

[0109] By turning the TFT 113 off, as shown in FIG. 11F, the source potential Vs of the TFT 111 as the drive transistor rises and current also flows to the EL light emitting element 114.

[0110] The source potential Vs of the TFT 111 fluctuates, but despite this, since there is a capacitor between the gate and source of the TFT 111, as shown in FIGS. 11E and 11F, the gate-source potential is constantly held at Vin.

[0111] At this time, the TFT 111 as the drive transistor drives in the saturated region, so the current Ids flowing through the TFT 111 becomes the value shown in the above equation 1. This value is determined by the gate source potential Vin of the TFT 111. This current Ids similarly flows to the EL light emitting element 114, whereby the EL light emitting element 114 emits light.

[0112] The equivalent circuit of the EL light emitting element 114 becomes as shown in FIG. 10F, so at this time the potential of the node ND111 rises to the gate potential by which the current Ids flows through the EL light emitting element 114.

[0113] Along with this rise in potential, the potential of the node ND112 also similarly rises through the capacitor 111 (pixel capacitor Cs). Due to this, as explained above, the gate-source potential of the TFT 111 is held at Vin.

[0114] Here, consider the problems in the past source-follower system in the circuit of the present invention. In this circuit as well, the EL light emitting element deteriorates in its I-V characteristic along with the increase in the emitting

period. Therefore, even if the drive transistor sends the same current, the potential applied to the EL light emitting element changes and the potential of the node ND111 falls.

[0115] However, in this circuit, the potential of the node ND111 falls while the gate-source potential of the drive transistor is held constant, so the current flowing through the drive transistor (TFT 111) does not change. Accordingly, the current flowing through the EL light emitting element also does not change. Even if the I-V characteristic of the EL light emitting element deteriorates, a current corresponding to the input voltage Vin constantly flows. Therefore, the past problem can be solved.

[0116] As explained above, according to the present first embodiment, the source of the TFT 111 as the drive transistor is connected to the anode of the light emitting element 114, the drain is connected to the power source potential Vcc, a capacitor C111 is connected between the gate and source of the TFT 111, and the source potential of the TFT 111 is connected to a fixed potential through the TFT 113 as the switching transistor, so the following effects can be obtained.

[0117] Source-follower output with no deterioration in luminance even with a change in the I-V characteristic of an EL light emitting element along with elapse becomes possible.

[0118] A source-follower circuit of n-channel transistors becomes possible, so it is possible to use an n-channel transistor as a drive element of an EL light emitting element while using current anode-cathode electrodes.

[0119] Further, it is possible to configure transistors of a pixel circuit by only n-channel transistors and possible to use the a-Si process in the fabrication of the TFTs. Due to this, there is the advantage that a reduction of the cost of TFT boards becomes possible.

<Second Embodiment>

[0120] FIG. 12 is a block diagram of the configuration of an organic EL display device employing pixel circuits according to a second embodiment.

[0121] FIG. 13 is a circuit diagram of the concrete configuration of a pixel circuit according to the second embodiment in the organic EL display device of FIG. 12.

[0122] The display device 200, as shown in FIG. 12 and FIG. 13, has a pixel array portion 202 having pixel circuits (PXLC) 201 arranged in an m x n matrix, a horizontal selector (HSEL) 203, a write scanner (WSCN) 204, a drive scanner (DSCN) 205, data lines DTL201 to DTL20n selected by the horizontal selector 203 and supplied with a data signal in accordance with the luminance information, scanning lines WSL201 to WSL20m selectively driven by the write scanner 204, and drive lines DSL201 to DSL20m selectively driven by the drive scanner 205.

[0123] Note that while the pixel circuits 201 are arranged in an m x n matrix in the pixel array portion 202, FIG. 12 shows an example wherein the pixel circuits are arranged in a 2 (= m) x 3 (= n) matrix for the simplification of the drawing.

[0124] Further, in FIG. 13 as well, the concrete configuration of one pixel circuit is shown for simplification of the drawing.

[0125] Each pixel circuit 201 according to the second embodiment has, as shown in FIG. 13, an n-channel TFT 211 to TFT 213, a capacitor C211, a light emitting element 214 made of an organic EL element (OLED), and nodes ND211 and ND212.

[0126] Further, in FIG. 13, DTL201 indicates a data line, WSL201 indicates a scanning line, and DSL201 indicates a drive line.

[0127] Among these components, the TFT 211 configures the field effect transistor according to the present invention, the TFT 212 configures the first switch, the TFT 213 configures the second switch, and the capacitor C211 configures the pixel capacitance element according to the present invention.

[0128] Further, the scanning line WSL 201 corresponds to the first control line according to the present invention, while the drive line DSL201 corresponds to the second control line.

[0129] Further, the supply line of the power source voltage Vcc (power source potential) corresponds to the first reference potential, while the ground potential GND corresponds to the reference potential.

[0130] In each pixel circuit 201, a source and a drain of the TFT 213 are connected between a source of the TFT 211 and an anode of the light emitting element 214, a drain of the TFT 211 is connected to the power source potential Vcc, and a cathode of the light emitting element 214 is connected to the ground potential GND. That is, the TFT 211 as the drive transistor, the TFT 213 as the switching transistor, and the light emitting element 214 are connected in series between the power source potential Vcc and the ground potential GND. Further, the connection point of the anode of the light emitting element 214 and the source of the TFT 213 constitutes a node ND211.

[0131] A gate of the TFT 211 is connected to the node ND212. Further, the capacitor C211 as a pixel capacitor Cs connected between the nodes ND211 and ND212, that is, between the gate of the TFT 211 and the anode of the light emitting element 214. A first electrode of the capacitor C211 is connected to the node ND211, while a second electrode is connected to the node ND212.

[0132] A gate of the TFT 213 is connected to the drive line DSL201. Further, a source and a drain of the TFT 212 as the first switch are connected to the data line DTL201 and the node ND212. Further, a gate of the TFT 212 is connected to the scanning line WSL201.

[0133] In this way, the pixel circuit 201 according to the present embodiment is configured with the source of the TFT 211 as the drive transistor and the anode of the light emitting element 214 connected by the TFT 213 as the switching transistor, while a capacitor C211 connected between the gate of the TFT 211 and the anode of the light emitting element 214.

[0134] Next, the operation of the above configuration will be explained focusing on the operation of a pixel circuit with reference to FIGS. 14A to 14E and FIGS. 15A to 15F.

[0135] Note that FIG. 15A shows a scanning signal ws[201] applied to the first row scanning line WSL201 of the pixel array, FIG. 15B shows a scanning signal ws[202] applied to the second row scanning line WSL202 of the pixel array, FIG. 15C shows a drive signal ds[201] applied to the first row drive line DSL201 of the pixel array, FIG. 15D shows a drive signal ds[202] applied to the second row drivd line DSL202 of the pixel array, FIG. 15E shows a gate potential Vg of the TFT 211, and FIG. 15F shows an anode side potential of the TFT 211, that is, the potential VND211 of the node ND211.

[0136] First, at the ordinary emitting state of the EL light emitting element 214, as shown in FIGS. 15A to 15D, the scanning signals ws[201], ws[202],.. to the scanning lines WSL201, WSL202,... are selectively set to the low level by the write scanner 204, and the drive signals ds[201], ds[202],... to the drive lines DSL201, DSL202,... are selectively set to the high level by the drive scanner 205.

[0137] As a result, in the pixel circuit 201, as shown in FIG. 14A, the TFT 212 is held in the off state and the TFT 213 is held in the on state.

[0138] At this time, the current Ids flows to the TFT 211 as the drive transistor and the EL light emitting element 214.

[0139] Next, in the non-emitting period of the EL light emitting element 214, as shown in FIGS. 15A to 15D, the scanning signals ws[201], ws[202],.. to the scanning lines WSL201, WSL202,... are held at the low level by the write scanner 204, and the drive signals ds[201], ds[202],... to the drive lines DSL201, DSL202,... are selectively set to the low level by the drive scanner 205.

[0140] As a result, in the pixel circuit 201, as shown in FIG. 14B, the TFT 212 is held in the off state and the TFT 213 is turned off.

[0141] At this time, the potential held at the EL light emitting element 214 falls since the source of supply disappears. The potential falls to the threshold voltage Vth of the EL light emitting element 214. However, since current also flows to the EL light emitting element 214, if the non-emitting period continues, the potential will fall to GND.

[0142] On the other hand, the TFT 211 as thr drive transistor is held in the on state since the gate potential is high. This boosting is performed in a short period. After boosting to the Vcc, no current is supplied to the TFT 211.

[0143] That is, in the pixel circuit 201 of the second embodiment, it is possible to operate without the supply of current in the pixel circuit during the non-emitting period and therefore possible to suppress the power consumption of the panel.

[0144] Next, in the non-emitting period of the EL light emitting element 214, as shown in FIGS. 15A to 15D, the drive signals ds[201], ds[202],.. to the drive lines DSL201, DSL202,... are held at the low level by the drive scanner 205, and the scanning signals ws[201], ws[202],... to the scanning lines WSL201, WSL202,... are selectively set to the high level by the write scanner 204.

[0145] As a result, in the pixel circuit 201, as shown in FIG. 14C, the TFT 213 is held in the off state and the TFT 212 is turned on. Due to this, the input signal (Vin) propagated to the data line DTL201 by the horizontal selector 203 is written into the capacitor C211 as the pixel capacitor Cs.

[0146] At this time, as shown in FIG. 15F, since the anode side potential Va of the TFT 213 as the switching transistor, that is, the potential VND211 of the node ND211, is at the ground potential level (GND level), the capacitor C211 as the pixel capacitor Cs is held at a potential equal to the voltage Vin of the input signal.

[0147] After this, in the non-emitting period of the EL light emitting element 214, as shown in FIGS. 15A to 15D, the drive signals ds[201], ds[202],... to the drive lines DSL201, DSL202,... are held at the low level by the drive scanner 205, and the scanning signals ws[201], ws[202],... to the scanning lines WSL201, WSL202,... are selectively set to the low level by the write scanner 204.

[0148] As a result, in the pixel circuit 201, as shown in FIG. 14D, the TFT 212 is turned off and the write operation of the input signal to the capacitor C211 as the pixel capacitor ends.

[0149] After this, as shown in FIGS. 15A to 15D, the scanning signals ws[201], ws[202],... to the scanning lines WSL201, WSL202,... are held at the low level by the write scanner 204, and the drive signals ds[201], ds[202],... to the drive lines DSL201, DSL202,... are selectively set to the high level by the drive scanner 205.

[0150] As a result, in the pixel circuit 201, as shown in FIG. 14E, the TFT 213 is turned on.

[0151] By turning the TFT 213 on, current flows to the EL light emitting element 214 and the source potential of the TFT 211 falls. The source potential of the TFT 211 as the drive transistor fluctuates, but despite this, since there is a capacitor between the gate of the TFT 211 and the anode of the light emitting element 214, the gate-source potential is held at Vin. At this time, the TFT 211 as the drive transistor is driven in the saturated region, so the current Ids flowing through the TFT 211 becomes the value shown in the above equation 1. This is the gate-source voltage Vgs of the drive transistor.

[0152] Here, the TFT 213 operates in the nonsaturated region, so this is viewed as a simple resistance value. Accordingly, the gate-source voltage of the TFT 211 is Vin minus the value of the voltage drop due to the TFT 211. That is, the current flowing through the TFT 211 can be said to be determined by the Vin.

[0153] Due to the above, even if the EL light emitting element 214 deteriorates in its I-V characteristic along with the increase in the emitting period, in the pixel circuit 201 of the second embodiment, the potential of the node ND211 falls while the potential between the gate and source of the TFT 211 as thr drive transistor by is held constant, so the current flowing through the TFT 211 does not change.

[0154] Accordingly, the current flowing through the EL light emitting element 214 also does not change. Even if the I-V characteristic of the EL light emitting element 214 deteriorates, the current corresponding to the input voltage Vin constantly flows and therefore the past problem can be solved.

[0155] In addition, by raising the on voltage of the gate of the TFT 213, it is possible to suppress variation in the resistance value due to variation in the threshold value Vth of the TFT 213.

[0156] Note that, in FIG. 13, the potential of the cathode electrode of the light emitting element 214 is made the ground potential GND, but this may be made any other potential as well.

[0157] Further, as shown in FIG. 16, the transistors of the pixel circuits need not be n-channel transistors. p-channel TFTs 221 to 223 may also be used to form each pixel circuit. In this case, the power source is connected to the anode side of the EL light emitting element 224, while the TFT 221 as the drive transistor is connected to the cathode side.

[0158] Further, the TFT 212 and TFT 213 as the switching transistors may also be transistors of different polarities from the TFT 211 as the drive transistor.

[0159] Here, the pixel circuit 201 according to the second embodiment and the pixel circuit 101 according to the first embodiment explained above will be compared.

[0160] The basic difference between the pixel circuit 201 according to the second embodiment and the pixel circuit 101 according to the first embodiment lies in the difference in the position of connection of the TFT 213 and TFT 113 as the switching transistors.

[0161] In general, the I-V characteristic of an organic EL element ends up deteriorating along with elapse. However, in the pixel circuit 101 according to the first embodiment, the potential difference Vs between the gate and source of the TFT 111 is held constant, so the current flowing through the TFT 111 is constant, therefore even if the I-V characteristic of the organic EL element deteriorates, the luminance is held.

[0162] In the pixel circuit 101 according to the first embodiment, when the TFT 112 is off and the TFT 113 is on, the source potential Vs of the drive transistor TFT 111 becomes the ground potential and the organic EL element 114 does not emit light and enters a non-emitting period. Simultaneously, the first electrode (one side) of the pixel capacitor also becomes the ground potential GND. However, even in the non-emitting period, the gate-source voltage continues to be held and current flows in the pixel circuit 101 from the power source (Vcc) to the GND.

[0163] In general, an organic EL element has an emitting period and a non-emitting period. The luminance of a panel is determined by the product of the intensity of the emission and the emitting period. Usually, the shorter the emitting period, the better the moving picture characteristics become, so it is preferable to use the panel in a short emitting period. To obtain the same luminance as with when shortening the emitting period, it is necessary to raise the intensity of the emission of the organic EL element and necessary to run a greater current through the drive transistor.

[0164] Here, the pixel circuit 101 according to the first embodiment will be considered further.

[0165] In the pixel circuit 101 according to the first embodiment, as explained above, current flows even during the non-emitting period. Therefore, if shortening the emitting period and raising the amount of current run, current continuously flows even during the non-emitting period, so the current consumption increases.

[0166] Further, in the pixel circuit 101 according to the first embodiment, power source potential WCC and ground potential GND lines are necessary in the panel. Therefore, it is necessary to lay two types of lines inside the panel at the TFT side. The Vcc and GND have to be laid by a low resistance to prevent a voltage drop. Accordingly, if laying two types of lines, the layout area of the lines has to be increased. For this reason, if the pitch between pixels becomes smaller along with the higher definition of panels, laying of the transistors etc. is liable to become difficult. Simultaneously, the regions where the Vcc lines and GND lines overlap in the panel are liable to increase and the improvement of the yield is liable to be kept down.

[0167] As opposed to this, according to the pixel circuit 201 according to the second embodiment, the effects of the above first embodiment can be obtained of course and also the effects of reduction of the consumed current and lines and improvement of the yield can be obtained.

[0168] According to the second embodiment, source-follower output with no deterioration in luminance even with a change in the I-V characteristic of an EL light emitting element along with elapse becomes possible.

[0169] A source-follower circuit of n-channel transistors becomes possible, so it is possible to use an n-channel transistor as a drive element of an EL light emitting element while using current anode-cathode electrodes.

[0170] Further, it is possible to configure transistors of a pixel circuit by only n-channel transistors and possible to use the a-Si process in the fabrication of the TFTs. Due to this, a reduction of the cost of TFT boards becomes possible.

[0171] Further, according to the second embodiment, it is possible to slash the number of GND lines at the TFT side and layout of the surrounding lines and layout of the pixels become easier.

[0172] Further, it is possible to slash the number of GND lines at the TFT side, possible to eliminate the overlap of the GND lines and Vcc lines at the TFT board, and possible to improve the yield.

[0173] Further, it is possible to slash the number of GND lines at the TFT side, possible to eliminate the overlap of the GND lines and Vcc lines at the TFT board so as to lay the Vcc lines at a low resistance, and possible to obtain an image quality of a high uniformity.

<Third Embodiment>

[0174] FIG. 17 is a block diagram of the configuration of an organic EL display device employing a pixel circuit according to a third embodiment.

[0175] FIG. 18 is a circuit diagram of the concrete configuration of a pixel circuit according to the third embodiment in the organic EL display device of FIG. 17.

[0176] The display device 200A according to the third embodiment differs from the display device 200 according to the second embodiment in the position of connection of the capacitor C211 as the pixel capacitor Cs in the pixel circuit.

[0177] Specifically, in the pixel circuit 201 according to the second embodiment, the capacitor C211 is connected between the gate of the TFT 211 as the drive transistor and the anode side of the EL light emitting element 214.

[0178] As opposed to this, in the pixel circuit 201A according to the third embodiment, the capacitor C211 is connected between the gate and source of the TFT 211 as the drive transistor. Specifically, a first electrode of the capacitor C211 is connected to the connection point (node ND211A) of the source of the TFT 211 and the TFT 213 as the switching transistor and a second electrode is connected to the node ND212.

[0179] The rest of the configuration is similar to that of the second embodiment explained above.

[0180] Next, the operation of the above configuration will be explained focusing on the operation of a pixel circuit with reference to FIGS. 19A to 19E and FIGS. 20A to 20F.

[0181] First, at the ordinary emitting state of the EL light emitting element 214, as shown in FIGS. 20A to 20D, the scanning signals ws[201], ws[202],.. to the scanning lines WSL201, WSL202,... are selectively set to the low level by the write scanner 204, and the drive signals ds[201], ds[202],... to the drive lines DSL201, DSL202,... are selectively set to the high level by the drive scanner 205.

[0182] As a result, in the pixel circuit 201A, as shown in FIG. 19A, the TFT 212 is held in the off state and the TFT 213 is held in the on state.

[0183] At this time, the current Ids flows to the TFT 211 as the drive transistor and the EL light emitting element 214.

[0184] Next, in the non-emitting period of the EL light emitting element 214, as shown in FIGS. 20A to 20D, the scanning signals ws[201], ws[202],.. to the scanning lines WSL201, WSL202,... are held at the low level by the write scanner 204, and the drive signals ds[201], ds[202],... to the drive lines DSL201, DSL202,... are selectively set to the low level by the drive scanner 205.

[0185] As a result, in the pixel circuit 201A, as shown in FIG. 19B, the TFT 212 is held in the off state and the TFT 213 is turned off.

[0186] At this time, the potential held at the EL light emitting element 214 falls since the source of supply disappears. The potential falls to the threshold voltage Vth of the EL light emitting element 214. However, since off current also flows to the EL light emitting element 214, if the non-emitting period continues, the potential will fall to GND.

[0187] On the other hand, the TFT 211 as the drive transistor is held in the on state since the gate potential is high. As shown in FIG. 20F, the source potential Vs of the TFT 211 is boosted to the power source voltage Vcc. This boosting is performed in a short period. After boosting to the Vcc, no current is supplied to the TFT 211.

[0188] That is, in the pixel circuit 201A of the third embodiment, it is possible to operate without the supply of current in the pixel circuit during the non-emitting period and therefore possible to suppress the power consumption of the panel.

[0189] Next, in the non-emitting period of the EL light emitting element 214, as shown in FIGS. 20A to 20D, the drive signals ds[201], ds[202],.. to the drive lines DSL201, DSL202,... are held at the low level by the drive scanner 205, and the scanning signals ws[201], ws[202],... to the scanning lines WSL201, WSL202,... are selectively set to the high level by the write scanner 204.

[0190] As a result, in the pixel circuit 201A, as shown in FIG. 19C, the TFT 213 is held in the off state and the TFT 212 is turned on. Due to this, the input signal (Vin) propagated to the data line DTL201 by the horizontal selector 203 is written into the capacitor C211 as the pixel capacitor Cs.

[0191] At this time, as shown in FIG. 20F, since the source Vs of the TFT 213 as the switching transistor is the power source potential Vcc, the capacitor C211 as the pixel capacitor Cs is held at a potential equal to (Vin-Vcc) with respect to the voltage Vin of the input signal.

[0192] After this, in the non-emitting period of the EL light emitting element 214, as shown in FIGS. 20A to 20D, the drive signals ds[201], ds[202],... to the drive lines DSL201, DSL202,... are held at the low level by the drive scanner 205,

and the scanning signals ws[201], ws[202],... to the scanning lines WSL201, WSL202,... are selectively set to the low level by the write scanner 204.

[0193] As a result, in the pixel circuit 201A, as shown in FIG. 19D, the TFT 212 is turned off and the write operation of the input signal to the capacitor C211 as the pixel capacitor ends.

[0194] After this, as shown in FIGS. 20A to 20D, the scanning signals ws[201], ws[202],... to the scanning lines WSL201, WSL202,... are held at the low level by the write scanner 204, and the drive signals ds[201], ds[202],... to the drive lines DSL201, DSL202,... are selectively set to the high level by the drive scanner 205.

[0195] As a result, in the pixel circuit 201A, as shown in FIG. 19E, the TFT 213 is turned on.

[0196] By turning the TFT 213 on, current flows to the EL light emitting element 214 and the source potential of the TFT 211 falls. The source potential of the TFT 211 as the drive transistor fluctuates, but despite this, since there is a capacitor between the gate and source of the TFT 211, the other transistors etc. are not connected, so the gate-source voltage of the TFT 211 is constantly held at (Vin-Vcc). At this time, the TFT 211 as the drive transistor is driven in the saturated region, so the current Ids flowing through the TFT 211 becomes the value shown in the above equation 1. This is the gate-source voltage Vgs of the drive transistor, that is, (Vin-Vcc).

[0197] That is, the current flowing through the TFT 211 can be said to be determined by the Vin.

[0198] Due to the above, even if the EL light emitting element 214 deteriorates in its I-V characteristic along with the increase in the emitting period, in the pixel circuit 201A of the third embodiment, the potential of the node ND211A falls while the potential between the gate and source of the TFT 211 as the drive transistor is held constant, so the current flowing through the TFT 211 does not change.

[0199] Accordingly, the current flowing through the EL light emitting element 214 also does not change. Even if the I-V characteristic of the EL light emitting element 214 deteriorates, the current corresponding to the input voltage Vin constantly flows and therefore the past problem can be solved.

[0200] In addition, since there is no transistor etc. other than the pixel capacitor Cs between the gate and source of the TFT 211, variation in the threshold value Vth will not cause any change of the gate-source voltage Vgs of the TFT 211 as the drive transistor like in the past system.

[0201] Note that, in FIG. 18, the potential of the cathode electrode of the light emitting element 214 is made the ground potential GND, but this may be made any other potential as well. Rather, making this the negative power source enables the potential of the Vcc to be lowered and enables the potential of the input signal voltage to be lowered. Due to this, design without burdening the external IC becomes possible.

[0202] Further, since no GND lines are required, the number of input pins to the panel can be slashed and pixel layout also becomes easier. In addition, since there are no longer intersecting parts of the Vcc and GND lines in the panel, the yield can also be easily improved.

[0203] Further, as shown in FIG. 21, the transistors of the pixel circuits need not be n-channel transistors. p-channel TFTs 231 to 233 may also be used to form each pixel circuit. In this case, the power source is connected to the anode side of the EL element 234, while the TFT 231 as the drive transistor is connected to the cathode side.

[0204] Further, the TFT 212 and TFT 213 as the switching transistors may also be transistors of different polarities from the TFT 211 as the drive transistor.

[0205] According to the third embodiment, source-follower output with no deterioration in luminance even with a change in the I-V characteristic of an EL light emitting element along with elapse becomes possible.

[0206] A source-follower circuit of n-channel transistors becomes possible, so it is possible to use an n-channel transistor as a drive element of an EL light emitting element while using current anode-cathode electrodes.

[0207] Further, it is possible to configure transistors of a pixel circuit by only n-channel transistors and possible to use the a-Si process in the fabrication of the TFTs. Due to this, a reduction of the cost of TFT boards becomes possible.

[0208] Further, according to the third embodiment, it is possible to slash the number of GND lines at the TFT side and layout of the surrounding lines and layout of the pixels become easier.

[0209] Further, it is possible to slash the number of GND lines at the TFT side, possible to eliminate the overlap of the GND lines and Vcc lines at the TFT board, and possible to improve the yield.

[0210] Further, it is possible to slash the number of GND lines at the TFT side, possible to eliminate the overlap of the GND lines and Vcc lines at the TFT board so as to lay the Vcc lines at a low resistance, and possible to obtain an image quality of a high uniformity.

<Fourth Embodiment>

[0211] FIG. 22 is a block diagram of the configuration of an organic EL display device employing a pixel circuit according to a fourth embodiment.

[0212] FIG. 23 is a circuit diagram of the concrete configuration of a pixel circuit according to the fourth embodiment in the organic EL display device of FIG. 22.

[0213] The display device 300, as shown in FIG. 22 and FIG. 23, has a pixel array portion 302 having pixel circuits

(PXLC) 301 arranged in an m x n matrix, a horizontal selector (HSEL) 303, a first write scanner (WSCN1) 304, a second write scanner (WSCN2) 305, a drive scanner (DSCN) 36, a constant voltage source (CVS) 307, data lines DTL301 to DTL30n selected by the horizontal selector 303 and supplied with a data signal in accordance with the luminance information, scanning lines WSL301 to WSL30m selectively driven by the write scanner 304, scanning lines WSL311 to WSL31m selectively driven by the write scanner 305, and drive lines DSL301 to DSL30m selectively driven by the drive scanner 306.

[0214] Note that while the pixel circuits 301 are arranged in an m x n matrix in the pixel array portion 302, FIG. 22 shows an example wherein the pixel circuits are arranged in a 2 (= m) x 3 (= n) matrix for the simplification of the drawing.

[0215] Further, in FIG. 23 as well, the concrete configuration of one pixel circuit is shown for simplification of the drawing.

[0216] Each pixel circuit 301 according to the fourth embodiment has, as shown in FIG. 23, an n-channel TFT 311 to TFT 314, a capacitor C311, a light emitting element 315 made of an organic EL element (OLED), and nodes ND311 and ND312.

[0217] Further, in FIG. 23, DTL301 indicates a data line, WSL301 and WSL311 indicate scanning lines, and DSL301 indicates a drive line.

[0218] Among these components, the TFT 311 configures the field effect transistor according to the present invention, the TFT 312 configures the first switch, the TFT 313 configures the second switch, the TFT 314 configures the third switch, and the capacitor C311 configures the pixel capacitance element according to the present invention.

[0219] Further, the scanning line WSL301 corresponds to the first control line according to the present invention, the drive line DSL301 corresponds to the second control line, and the scanning line WSL311 corresponds to the third control line.

[0220] Further, the supply line of the power source voltage Vcc (power source potential) corresponds to the first reference potential, while the ground potential GND corresponds to the reference potential.

[0221] In each pixel circuit 301, a source and a drain of the TFT 313 are connected between a source of the TFT 311 and an anode of the light emitting element 315, a drain of the TFT 311 is connected to the power source potential Vcc, and a cathode of the light emitting element 315 is connected to the ground potential GND. That is, the TFT 311 as the drive transistor, the TFT 313 as the switching transistor, and the light emitting element 315 are connected in series between the power source potential Vcc and the ground potential GND. Further, the connection point of the anode of the light emitting element 315 and the TFT 313 constitutes a node ND311.

[0222] A gate of the TFT 311 is connected to the node ND312. Further, the capacitor C311 as a pixel capacitor Cs is connected between the nodes ND311 and ND312, that is, between the gate of the TFT 311 and the node ND311 (anode of the light emitting element 315). A first electrode of the capacitor C311 is connected to the node ND311, while a second electrode is connected to the node ND312.

[0223] A gate of the TFT 313 is connected to the drive line DSL301. Further, a source and a drain of the TFT 312 as the first switch are connected to the data line DTL301 and the node ND312. Further, a gate of the TFT 312 is connected to the scanning line WSL301.

[0224] Further, a source and a drain of the TFT 314 are connected between the node ND311 and the constant voltage source 307. A gate of the TFT 314 is connected to the scanning line WSL311.

[0225] In this way, the pixel circuit 301 according to the present embodiment is configured with the source of the TFT 311 as the drive transistor and the anode of the light emitting element 315 connected by the TFT 313 as the switching transistor, a capacitor C311 connected between the gate of the TFT 311 and the node ND311 (anode of the light emitting element 315), and a node ND311 is connected through the TFT 314 to the constant voltage source 307 (fixed voltage line).

[0226] Next, the operation of the above configuration will be explained focusing on the operation of a pixel circuit with reference to FIGS. 24A to 24E and FIGS. 25A to 25H.

[0227] Note that FIG. 25A shows a scanning signal ws[301] applied to the first row scanning line WSL301 of the pixel array, FIG. 25B shows a scanning signal ws[302] applied to the second row scanning line WSL302 of the pixel array, FIG. 25C shows a scanning signal ws[311] applied to the first row scanning line WSL311 of the pixel array, FIG. 25D shows a scanning signal ws[312] applied to the second row scanning line WSL312 of the pixel array, FIG. 25E shows a drive signal ds[301] applied to the first row drivd line DSL301 of the pixel array, FIG. 25F shows a drive signal ds[302] applied to the second row drive line DSL302 of the pixel array, FIG. 25G shows a gate potential Vg of the TFT 311, and FIG. 25H shows an anode side potential of the TFT 311, that is, the potential VND311 of the node ND311.

[0228] First, at the ordinary emitting state of the EL light emitting element 315, as shown in FIGS. 25A to 25F, the scanning signals ws[301], ws[302],.. to the scanning lines WSL301, WSL302,... are selectively set to the low level by the write scanner 304, the scanning signals ws[311], ws[312],.. to the scanning lines WSL311, WSL312,... are selectively set to the low level by the write scanner 305, and the drive signals ds[301], ds[302],... to the drive lines DSL301, DSL302,... are selectively set to the high level by the drive scanner 306.

[0229] As a result, in the pixel circuit 301, as shown in FIG. 24A, the TFTs 312 and 314 are held in the off state and the TFT 313 is held in the on state.

[0230] At this time, since the TFT 311 as the drive transistor is driven in the saturated region, the current Ids flows to

the TFT 311 and the EL element 315 with respect to the gate-source voltage Vgs.

[0231] Next, in the non-emitting period of the EL light emitting element 315, as shown in FIGS. 25A to 25F, the scanning signals ws[301], ws[302],.. to the scanning lines WSL301, WSL302,... are held at the low level by the write scanner 304, the scanning signals ws[311], ws[312],.. to the scanning lines WSL311, WSL312,... are held at the low level by the write scanner 305, and the drive signals ds[301], ds[302],... to the drive lines DSL301, DSL302,... are selectively set to the low level by the drive scanner 306.

[0232] As a result, in the pixel circuit 301, as shown in FIG. 24B, the TFT 312 and the TFT 314 are held in the off state and the TFT 313 is turned off.

[0233] At this time, the potential held at the EL light emitting element 315 falls since the source of supply disappears. The potential falls to the threshold voltage Vth of the EL light emitting element 315. However, since off current also flows to the EL light emitting element 315, if the non-emitting period continues, the potential will fall to GND.

[0234] On the other hand, the TFT 311 as the drive transistor is held in the on state since the gate potential is high. As shown in FIG. 25G, the source potential of the TFT 311 is boosted to the power source voltage Vcc. This boosting is performed in a short period. After boosting to the Vcc, no current is supplied to the TFT 311.

[0235] That is, in the pixel circuit 301 of the fourth embodiment, it is possible to operate without the supply of current in the pixel circuit during the non-emitting period and therefore possible to suppress the power consumption of the panel.

[0236] Next, in the non-emitting period of the EL light emitting element 315, as shown in FIGS. 25A to 25F, the drive signals ds[301], ds[302],.. to the drive lines DSL301, DSL302,... are held at the low level by the drive scanner 306, the scanning signals ws[301], ws[302],... to the scanning lines WSL301, WSL302,... are selectively set to the high level by the write scanner 304, and the scanning signals ws[311], ws[312],... to the scanning lines WSL311, WSL312,... are selectively set to the high level by the write scanner 305.

[0237] As a result, in the pixel circuit 301, as shown in FIG. 24C, the TFT 312 and TFT 314 are turned on while the TFT 313 is held in the off state. Due to this, the input signal (Vin) propagated to the data line DTL301 by the horizontal selector 303 is written into the capacitor C311 as the pixel capacitor Cs.

[0238] When writing this signal line voltage, it is important that the TFT 314 be turned on. If there were no TFT 314, if the TFT 312 were turned on and the video signal were written in the pixel capacor Cs, coupling would enter the source potential Vs of the TFT 311. As opposed to this, if turning on the TFT 314 connecting the node ND311 to the constant voltage source 307, it will be connected to the low impedance line, so the voltage of the line would be written into the source potential side (node ND311) of the TFT 311.

[0239] At this time, if making the potential of the line Vo, the source potential (potential of the node ND311) of the TFT 311 as the drive transistor becomes Vo, so a potential equal to (Vin-Vo) is held with respect to the voltage Vin of the input signal at the pixel capacitor Cs.

[0240] After this, in the non-emitting period of the EL light emitting element 315, as shown in FIGS. 25A to 25F, the drive signals ds[301], ds[302],... to the drive lines DSL301, DSL302,... are held at the low level by the drive scanner 306, the scanning signals ws[311], ws[312],... to the scanning lines WSL311, WSL312,... are held at the high level by the write scanner 306, and the scanning signals ws[301], ws[302],... to the scanning lines WSL301, WSL302,... are selectively set to the low level by the write scanner 304.

[0241] As a result, in the pixel circuit 301, as shown in FIG. 24D, the TFT 312 is turned off and the write operation of the input signal to the capacitor C311 as the pixel capacitor ends.

[0242] At this time, the source potential of the TFT 311 (potential of node ND311) has to hold the low impedance, so the TFT 314 is left on.

[0243] After this, as shown in FIGS. 25A to 25F, while the drive signals ws[301], ws[302],... to the scanning lines WSL301, WSL302,... are held at the low level by the write scanner 304, the scanning signals ws[311], ws[312],... to the scanning lines WSL311, WSL312,... are set to the low level by the write scanner 305, then the drive signals ds[301], ds[302],... to the drive lines DSL301, DSL302,... are selectively set to the high level by the drive scanner 306.

[0244] As a result, in the pixel circuit 301, as shown in FIG. 24E, the TFT 314 is turned off and the TFT 313 becomes on.

[0245] By turning the TFT 313 on, current flows to the EL light emitting element 315 and the source potential of the TFT 311 falls. The source potential of the TFT 311 as the drive transistor fluctuates, but despite this, since there is a capacitor between the gate and source of the TFT 311, the gate-source voltage of the TFT 311 is constantly held at (Vin-Vo).

[0246] At this time, the TFT 311 as the drive transistor is driven in the saturated region, so the current Ids flowing through the TFT 311 becomes the value shown in the above equation 1. This is the gate-source voltage Vgs of the drive transistor, that is, (Vin-Vo).

[0247] That is, the current flowing through the TFT 311 can be said to be determined by the Vin.

[0248] In this way, by turning the TFT 314 on during a signal write period to make the source of the TFT 311 low in impedance, it is possible to make the source side of the TFT 311 of the pixel capacitor a fixed potential at all times, there is no need to consider deterioration of image quality due to coupling at the time of a signal line write operation, and it is possible to write the signal line voltage in a short time. Further, it is possible to increase the pixel capacity to take

measures against leak characteristics.

[0249] Due to the above, even if the EL light emitting element 315 deteriorates in its I-V characteristic along with the increase in the emitting period, in the pixel circuit 301 of the fourth embodiment, the potential of the node ND311 falls while the potential between the gate and source of the TFT 311 as the drive transistor is held constant, so the current flowing through the TFT 311 does not change.

[0250] Accordingly, the current flowing through the EL light emitting element 315 also does not change. Even if the I-V characteristic of the EL light emitting element 315 deteriorates, the current corresponding to the input voltage Vin constantly flows and therefore the past problem can be solved.

[0251] In addition, since there is no transistor etc. other than the pixel capacitor Cs between the gate and source of the TFT 311, variation in the threshold value Vth will not cause any change of the gate-source voltage Vgs of the TFT 311 as the drive transistor like in the past system.

[0252] Note that the potential of the line connected to the TFT 314 (constant voltage source) is not limited, but as shown in FIG. 26, if making the potential the same as Vcc, slashing the number of signal lines becomes possible. Due to this, the layout of the panel lines and pixel parts becomes easy. Further, the number of pads for panel input becomes possible.

[0253] On the other hand, the gate-source voltage Vgs of the TFT 311 as the drive transistor, as explained above, is determined by Vin-Vo. Accordingly, for example as shown in FIG. 27, if setting Vo to a low potential such as the ground potential GND, the input signal voltage Vin can be prepared by the low potential near the GND level and boosting of the signal of the nearby ICs is not required. Further, it is possible to reduce the on voltage of the TFT 313 as the switching transistor and possible to eliminate the burden on the external ICs in design.

[0254] Further, in FIG. 23, the potential of the cathode electrode of the light emitting element 315 is made the ground potential GND, but this may be made any other potential as well. Rather, making this the negative power source enables the potential of the Vcc to be lowered and enables the potential of the input signal voltage to be lowered. Due to this, design without burdening the external IC becomes possible.

[0255] Further, as shown in FIG. 28, the transistors of the pixel circuits need not be n-channel transistors. p-channel TFTs 321 to 324 may also be used to form each pixel circuit. In this case, the power source potential Vcc is connected to the anode side of the EL light emitting element 324, while the TFT 321 as the drive transistor is connected to the cathode side.

[0256] Further, the TFT 312, TFT 313, and TFT 314 as the switching transistors may also be transistors of different polarities from the TFT 311 as the drive transistor.

[0257] According to the fourth embodiment, source-follower output with no deterioration in luminance even with a change in the I-V characteristic of an EL element along with elapse becomes possible.

[0258] A source-follower circuit of n-channel transistors becomes possible, so it is possible to use an n-channel transistor as a drive element of an EL light emitting element while using current anode-cathode electrodes.

[0259] Further, it is possible to configure transistors of a pixel circuit by only n-channel transistors and possible to use the a-Si process in the fabrication of the TFTs. Due to this, a reduction of the cost of TFT boards becomes possible.

[0260] Further, according to the fourth embodiment, it is possible to write the signal line voltage in a short time even with for example a black signal and possible to obtain an image quality with a high uniformity. Simultaneously, it is possible to increase the signal line capacity and suppress leakage characteristics.

[0261] Further, it is possible to slash the number of GND lines at the TFT side and layout of the surrounding lines and layout of the pixels become easier.

[0262] Further, it is possible to slash the number of GND lines at the TFT side, possible to eliminate the overlap of the GND lines and Vcc lines at the TFT board, and possible to improve the yield.

[0263] Further, it is possible to slash the number of GND lines at the TFT side, possible to eliminate the overlap of the GND lines and Vcc lines at the TFT board so as to lay the Vcc lines at a low resistance, and possible to obtain an image quality of a high uniformity.

[0264] Still further, it is possible to make the input signal voltage near the GND and possible to lighten the load on the external drive system.

<Fifth Embodiment>

[0265] FIG. 29 is a block diagram of the configuration of an organic EL display device employing a pixel circuit according to a fifth embodiment.

[0266] FIG. 30 is a circuit diagram of the concrete configuration of a pixel circuit according to the fifth embodiment in the organic EL display device of FIG. 29.

[0267] The display device 300A according to the fifth embodiment differs from the display device 300 according to the fourth embodiment in the position of connection of the capacitor C311 as the pixel capacitor Cs in the pixel circuit.

[0268] Specifically, in the pixel circuit 301 according to the fourth embodiment, the capacitor C311 is connected

between the gate of the TFT 311 as the drive transistor and the anode side of the EL light emitting element 315.

[0269] As opposed to this, in the pixel circuit 301A according to the fifth embodiment, the capacitor C311 is connected between the gate and source of the TFT 311 as the drive transistor. Specifically, a first electrode of the capacitor C311 is connected to the connection point (node ND311A) of the source of the TFT 311 and the TFT 313 as the switching transistor and a second electrode is connected to the node ND312.

[0270] The rest of the configuration is similar to that of the fourth embodiment explained above.

[0271] Next, the operation of the above configuration will be explained focusing on the operation of a pixel circuit with reference to FIGS. 31A to 31E and FIGS. 32A to 32H.

[0272] First, at the ordinary emitting state of the EL light emitting element 315, as shown in FIGS. 32A to 32F, the scanning signals ws[301], ws[302],.. to the scanning lines WSL301, WSL302,... are selectively set to the low level by the write scanner 304, the scanning signals ws[311], ws[312],.. to the scanning lines WSL311, WSL312,... are selectively set to the low level by the write scanner 305, and the drive signals ds[301], ds[302],... to the drive lines DSL301, DSL302,... are selectively set to the high level by the drive scanner 306.

[0273] As a result, in the pixel circuit 301, as shown in FIG. 31A, the TFTs 312 and 314 are held in the off state and the TFT 313 is held in the on state.

[0274] At this time, the TFT 311 as the drive transistor is driven in the saturated region, so the current Ids flows to the TFT 311 and the EL light emitting element 315 with respect to the gate-source voltage Vgs.

[0275] Next, in the non-emitting period of the EL light emitting element 315, as shown in FIGS. 32A to 32F, the scanning signals ws[301], ws[302],.. to the scanning lines WSL301, WSL302,... are selectively held at the low level by the write scanner 304, the scanning signals ws[311], ws[312],.. to the scanning lines WSL311, WSL312,... are selectively held at the low level by the write scanner 305, and the drive signals ds[301], ds[302],... to the drive lines DSL301, DSL302,... are selectively set to the low level by the drive scanner 306.

[0276] As a result, in the pixel circuit 301, as shown in FIG. 31B, the TFT 312 and TFT 314 are held in the off state and the TFT 313 is turned off.

[0277] At this time, the potential held at the EL light emitting element 315 falls since the source of supply disappears and the EL light emitting element 315 does not emit light. The potential falls to the threshold voltage Vth of the EL light emitting element 315. However, since off current also flows to the EL light emitting element 315, if the non-emitting period continues, the potential will fall to GND.

[0278] On the other hand, along with the voltage drop of the anode side of the EL light emitting element 315, the gate potential of the TFT 311 as the drive transistor falls through the capacitor C311. In parallel with this, current flows to the TFT 311 and the source potential rises.

[0279] Due to this, the TFT 311 becomes cut off and no current flows to the TFT 311.

[0280] That is, in the pixel circuit 301A of the fifth embodiment, it is possible to operate without the supply of current in the pixel circuit during the non-emitting period and therefore possible to suppress the power consumption of the panel.

[0281] Next, in the non-emitting period of the EL light emitting element 315, as shown in FIGS. 32A to 32F, while the drive signals ds[301], ds[302],.. to the drive lines DSL301, DSL302,... are held at the low level by the drive scanner 306, the scanning signals ws[301], ws[302],... to the scanning lines WSL301, WSL302,... are selectively set to the high level by the write scanner 304, and the scanning signals ws[311], ws[312],... to the scanning lines WSL311, WSL312,... are selectively set to the high level by the write scanner 305.

[0282] As a result, in the pixel circuit 301A, as shown in FIG. 31C, the TFT 313 is held in the off state and the TFT 312 and TFT 314 are turned on. Due to this, the input signal (Vin) propagated to the data line DTL301 by the horizontal selector 303 is written into the capacitor C311 as the pixel capacitor Cs.

[0283] When writing this signal line voltage, it is important that the TFT 314 be turned on. If there were no TFT 314, if the TFT 312 were turned on and the video signal were written in the pixel capacor Cs, coupling would enter the source potential Vs of the TFT 311. As opposed to this, if turning on the TFT 314 connecting the node ND311 to the constant voltage source 307, it will be connected to the low impedance line, so the voltage of the line would be written into the source potential of the TFT 311.

[0284] At this time, if making the potential of the line Vo, the source potential of the TFT 311 as the drive transistor becomes Vo, so a potential equal to (Vin-Vo) is held with respect to the voltage Vin of the input signal at the pixel capacitor Cs.

[0285] After this, in the non-emitting period of the EL light emitting element 315, as shown in FIGS. 32A to 32F, the drive signals ds[301], ds[302],... to the drive lines DSL301, DSL302,... are held at the low level by the drive scanner 306, the scanning signals ws[311], ws[312],... to the scanning lines WSL311, WSL312,... are held at the high level by the write scanner 305, and the scanning signals ws[301], ws[302],... to the scanning lines WSL301, WSL302,... are selectively set to the low level by the write scanner 304.

[0286] As a result, in the pixel circuit 301A, as shown in FIG. 31D, the TFT 312 is turned off and the write operation of the input signal to the capacitor C311 as the pixel capacitor ends.

[0287] At this time, the source potential of the TFT 311 has to hold the low impedance, so the TFT 314 is left on.

[0288] After this, as shown in FIGS. 32A to 32F, while the scanning signals ws[301], ws[302],... to the scanning lines WSL301, WSL302,... are held at the low level by the write scanner 304, scanning signals ws[311], ws[312],... to the scanning lines WSL311, WSL312,... are set to the low level by the write scanner 305, then the drive signals ds[301], ds[302],... to the drive lines DSL301, DSL302,... are selectively set to the high level by the drive scanner 306.

[0289] As a result, in the pixel circuit 301, as shown in FIG. 31E, the TFT 314 is turned off and the TFT 313 becomes on.

[0290] By turning the TFT 313 on, current flows to the EL light emitting element 315 and the source potential of the TFT 311 falls. The source potential of the TFT 311 as the drive transistor fluctuates, but despite this, since there is a capacity between the gate and source of the TFT 311, the gate-source voltage of the TFT 311 is constantly held at (Vin-Vcc).

[0291] Here, the TFT 313 drives in the non-saturated region, so this is viewed as a simple resistance value. Accordingly, the gate-source voltage of the TFT 311 is (Vin-Vo) minus the value of the voltage drop due to the TFT 313. That is, the current flowing through the TFT 311 can be said to be determined by the Vin.

[0292] In this way, by turning the TFT 314 on during a signal write period to make the source of the TFT 311 low in impedance, it is possible to make the source side of the TFT 311 of the pixel capacitor a fixed potential at all times, there is no need to consider deterioration of image quality due to coupling at the time of a signal line write operation, and it is possible to write the signal line voltage in a short time. Further, it is possible to increase the pixel capacity to take measures against leak characteristics.

[0293] At this time, the TFT 311 as the drive transistor constituted by is driven in the saturated region, so the current Ids flowing through the TFT 311 becomes the value shown in the above equation 1. This is the gate-source voltage Vgs of the drive transistor, that is, (Vin-Vcc).

[0294] That is, the current flowing through the TFT 311 can be said to be determined by the Vin.

[0295] Due to the above, even if the EL light emitting element 315 deteriorates in its I-V characteristic along with the increase in the emitting period, in the pixel circuit 201A of the fifth embodiment, the potential of the node ND311 falls while the potential between the gate and source of the TFT 311 as the drive transistor is held constant, so the current flowing through the TFT 311 does not change.

[0296] Accordingly, the current flowing through the EL light emitting element 315 also does not change. Even if the I-V characteristic of the EL light emitting element 315 deteriorates, the current corresponding to the input voltage Vin constantly flows and therefore the past problem can be solved.

[0297] Note that the potential of the line connected to the TFT 314 (constant voltage source) is not limited, but as shown in FIG. 33, if making the potential the same as Vcc, slashing the number of signal lines becomes possible. Due to this, the layout of the panel lines and pixel parts becomes easy. Further, the number of pads for panel input becomes possible.

[0298] On the other hand, the gate-source voltage Vgs of the TFT 311 as the drive transistor, as explained above, is determined by Vin-Vo. Accordingly, for example as shown in FIG. 34, if setting Vo to a low potential such as the ground potential GND, the input signal voltage Vin can be prepared by the low potential near the GND level and boosting of the signal of the nearby ICs is not required. Further, it is possible to reduce the on voltage of the TFT 313 as the switching transistor and possible to eliminate the burden on the external ICs in design.

[0299] Further, in FIG. 30, the potential of the cathode electrode of the light emitting element 315 is made the ground potential GND, but this may be made any other potential as well. Rather, making this the negative power source enables the potential of the Vcc to be lowered and enables the potential of the input signal voltage to be lowered. Due to this, design without burdening the external IC becomes possible.

[0300] Further, as shown in FIG. 35, the transistors of the pixel circuits need not be n-channel transistors. p-channel TFTs 321 to 324 may also be used to form each pixel circuit. In this case, the power source is connected to the anode side of the EL light emitting element 325, while the TFT 321 as the drive transistor is connected to the cathode side.

[0301] Further, the TFT 312, TFT 313, and TFT 314 as the switching transistors may also be transistors of different polarities from the TFT 311 as the drive transistor.

[0302] According to the fifth embodiment, source-follower output with no deterioration in luminance even with a change in the I-V characteristic of an EL element along with elapse becomes possible.

[0303] A source-follower circuit of n-channel transistors becomes possible, so it is possible to use an n-channel transistor as a drive element of an EL light emitting element while using current anode-cathode electrodes.

[0304] Further, it is possible to configure transistors of a pixel circuit by only n-channel transistors and possible to use the a-Si process in the fabrication of the TFTs. Due to this, a reduction of the cost of TFT boards becomes possible.

[0305] Further, according to the fifth embodiment, it is possible to write the signal line voltage in a short time even with for example a black signal and possible to obtain an image quality with a high uniformity. Simultaneously, it is possible to increase the signal line capacity and suppress leakage characteristics.

[0306] Further, it is possible to slash the number of GND lines at the TFT side and layout of the surrounding lines and layout of the pixels become easier.

[0307] Further, it is possible to slash the number of GND lines at the TFT side, possible to eliminate the overlap of the

GND lines and Vcc lines at the TFT board, and possible to improve the yield.

[0308] Further, it is possible to slash the number of GND lines at the TFT side, possible to eliminate the overlap of the GND lines and Vcc lines at the TFT board so as to lay the Vcc lines at a low resistance, and possible to obtain an image quality of a high uniformity.

[0309] Still further, it is possible to make the input signal voltage near the GND and possible to lighten the load on the external drive system.

<Sixth Embodiment>

[0310] FIG. 36 is a block diagram of the configuration of an organic EL display device employing pixel circuits according to a sixth embodiment.

[0311] FIG. 37 is a circuit diagram of the concrete configuration of a pixel circuit according to the sixth embodiment in the organic EL display device of FIG. 36.

[0312] This display device 400 has, as shown in FIG. 36 and FIG. 37, a pixel array portion 402 having pixel circuits (PXLC) 401 arranged in an m x n matrix, a horizontal selector (HSEL) 403, a write scanner (WSCN) 404, a first drive scanner (DSCN1) 405, a second drive scanner (DSCN2) 406, a third drive scanner (DSCN3) 407, data lines DTL401 to DTL40n selected by the horizontal selector 403 and supplied with a data signal in accordance with the luminance information, scanning lines WSL401 to WSL40m selectively driven by the write scanner 404, drive lines DSL401 to DSL40m selectively driven by the first drive scanner 405, drive lines DSL411 to DSL41m selectively driven by the second drive scanner 406, and drive lines DSL421 to DSL42m selectively driven by the third drive scanner 407.

[0313] Note that while the pixel circuits 401 are arranged in an m x n matrix in the pixel array portion 402, FIG. 36 shows an example wherein the pixel circuits are arranged in a 2 (= m) x 3 (= n) matrix for the simplification of the drawing.

[0314] Further, in FIG. 37, the concrete configuration of one pixel circuit is shown for simplification of the drawing.

[0315] The pixel circuit 401 according to the sixth embodiment has, as shown in FIG. 37, n-channel TFT 411 to TFT 415, a capacitor C411, a light emitting element 416 made of an organic EL element (OLED), and nodes ND411 and ND412.

[0316] Further, in FIG. 37, DTL401 indicates a data line, WSL401 indicates a scanning line, and DSL401, DSL411, and DSL421 indicate drive lines.

[0317] Among these components, TFT 411 configures the field effect transistor according to the present invention, TFT 412 configures the first switch, TFT 413 configures the second switch, TFT 414 configures the third switch, TFT 415 configures the fourth switch, and the capacitor C411 configures the pixel capacitance element according to the present invention.

[0318] Further, the scanning line WSL401 corresponds to the first control line according to the present invention, the drive line DSL401 corresponds to the second control line, the drive line DSL411 corresponds to the third control line, and the drive line DSL421 corresponds to the fourth control line.

[0319] Further, the supply line (power source potential) of the power source voltage Vcc corresponds to the first reference potential, while the ground potential GND corresponds to the second reference potential.

[0320] In each pixel circuit 401, a source and a drain of the TFT 414 are connected between a source of the TFT 411 and the node ND411, a source and a drain of the TFT 413 are connected between the node ND411 and an anode of the light emitting element 416, a drain of the TFT 411 is connected to the power source potential Vcc, and a cathode of the light emitting element 416 is connected to the ground potential GND. That is, the TFT 411 as the drive transistor, the TFT 414 and TFT 413 as the switching transistors, and the light emitting element 416 are connected in series between the power source potential Vcc and the ground potential GND.

[0321] A gate of the TFT 411 is connected to the node ND412. Further, the capacitor C411 as a pixel capacitor Cs is connected between the gate and source of the TFT 411. A first electrode of the capacitor C411 is connected to the node ND411, while a second electrode is connected to the node ND412.

[0322] A gate of the TFT 413 is connected to the drive line DSL401. Further, a gate of the TFT 414 is connected to the drive line DSL411. Further, a source and a drain of the TFT 412 as the first switch are connected between the data line DTL401 and the node ND411 (connection point with first electrode of capacitor C411). Further, a gate of the TFT 412 is connected to the scanning line WSL401.

[0323] Further, a source and a drain of the TFT 415 are connected between the node ND412 and the power source potential Vcc. A gate of the TFT 415 is connected to the drive line DSL421.

[0324] In this way, the pixel circuit 401 according to the present embodiment is configured with the source of the TFT 411 as the drive transistor and the anode of the light emitting element 416 connected by the TFT 414 and TFT 413 as the switching transistors, a capacitor C411 connected between the gate of the TFT 411 and the source side node ND411, and the gate of the TFT 411 (node ND412) connected through the TFT 415 to the power source potential Vcc (fixed voltage line).

[0325] Next, the operation of the above configuration will be explained focusing on the operation of a pixel circuit with reference to FIGS. 38A to 38F, FIG. 39, and FIGS. 40A to 40H.

[0326] FIG. 40A shows a scanning signal ws[401] applied to the first row scanning line WSL401 of the pixel array, FIG. 40B shows a scanning signal ws[402] applied to the second row scanning line WSL402 of the pixel array, FIG. 40C shows drive signals ds[401] and ds[411] applied to the first row drive lines DSL401 and DSL411 of the pixel array, FIG. 40D shows drive signals ds[402] and d[412] applied to the second row drive lines DSL402 and DSL412 of the pixel array, FIG. 40E shows a drive signal ds[421] applied to the first row drive line DSL421 of the pixel array, FIG. 40F shows a drive signal ds[422] applied to the second row drive line DSL421 of the pixel array, FIG. 40G shows a gate potential Vg of the TFT 411, that is, the potential VND412 of the node ND412, and FIG. 40H shows an anode side potential of the TFT 411, that is, the potential VND411 of the node ND411.

[0327] Note that there is no problem no matter which of the TFT 413 and TFT 414 turns on or off, so as shown in FIG. 40C and FIG. 40D, the drive signals DS[401] and ds[411] and the drive signals ds[402] and ds[412] applied to the drive lines DSL401 and DSL411 and the drive lines DSL402 and DSL412 are made the same timing.

[0328] First, at the ordinary emitting state of the EL light emitting element 416, as shown in FIGS. 40A to 40F, the scanning signals ws[401], ws[402],.. to the scanning lines WSL401, WSL402,... are selectively set to the low level by the write scanner 404, the drive signals ds[401], ds[402],... to the drive lines DSL401, DSL402,... are selectively set to the high level by the drive scanner 405, the drive signals ds[411], ds[412],... to the drive lines DSL411, DSL412,... are selectively set to the high level by the drive scanner 406, and the drive signals ds[421], ds[422],... to the drive lines DSL421, DSL422,... are selectively set to the low level by the drive scanner 407.

[0329] As a result, in the pixel circuit 401, as shown in FIG. 38A, the TFT 414 and TFT 413 are held in the on state and the TFT 412 and TFT 415 is held in the off state.

[0330] First, at the ordinary non-emitting state of the EL light emitting element 416, as shown in FIGS. 40A to 40F, the scanning signals ws[401], ws[402],.. to the scanning lines WSL401, WSL402,... are held at the low level by the write scanner 404, the drive signals ds[421], ds[422],... to the drive lines DSL421, DSL422,... are held at the low level by the drive scanner 407, the drive signals ds[401], ds[402],... to the drive lines DSL401, DSL402,... are selectively set to the low level by the drive scanner 405, and the drive signals ds[411], ds[412],... to the drive lines DSL411, DSL412,... are selectively set to the low level by the drive scanner 406.

[0331] As a result, in the pixel circuit 401, as shown in FIG. 38B, the TFT 412 and TFT 415 are held in the off state and the TFTs 413 and 414 are turned off.

[0332] At this time, the potential held at the EL light emitting element 416 falls since the source of supply disappears. The EL light emitting element 416 stops emitting light. The potential falls to the threshold voltage Vth of the EL light emitting element 416. However, since off current also flows to the EL light emitting element 416, if the non-emitting period continues, the potential will fall to GND.

[0333] On the other hand, the TFT 411 as the drive transistor is held in the on state since the gate potential is high. The source potential of the TFT 411 is boosted to the power source voltage Vcc. This boosting is performed in a short period. After boosting to the Vcc, no current is supplied to the TFT 411.

[0334] That is, in the pixel circuit 401 of the sixth embodiment, it is possible to operate without the supply of current in the pixel circuit during the non-emitting period and therefore possible to suppress the power consumption of the panel.

[0335] In this state, next, as shown in FIGS. 40A to 40F, the drive signals ds[401], ds[402],... to the drive lines DSL401, DSL402,... are held at the low level by the drive scanner 405, the drive signals ds[411], ds[412],... to the drive lines DSL411, DSL412,... are held at the low level by the drive scanner 406, and in that state the drive signals ds[421], ds[422],... to the drive lines DSL421, DSL422,... are set to the high level by the drive scanner 407, then the scanning signals ws[401], ws[402],.. to the scanning lines WSL401, WSL402,... are selectively set to the high level by the write scanner 404.

[0336] As a result, in the pixel circuit 401, as shown in FIG. 38C, the TFT 413 and TFT 414 are held in the off state and the TFT 412 and TFT 415 are turned on. Due to this, the input signal propagated to the data line DTL401 by the horizontal selector 403 is written into the capacitor C411 as the pixel capacitor Cs.

[0337] At this time, the capacitor C411 as the pixel capacitor Cs holds a potential equal to the difference (Vcc-Vin) between the power source voltage Vcc and the input voltage Vin.

[0338] After this, in the non-emitting period of the EL light emitting element 416, as shown in FIGS. 40A to 40F, the drive signals ds[401], ds[402],... to the drive lines DSL401, DSL402,... are held at the low level by the drive scanner 405, the drive signals ds[411], ds[412],... to the drive lines DSL411, DSL412,... are held at the low level by the drive scanner 406, and in that state the drive signals ds[421], ds[422],... to the drive lines DSL421, DSL422,... are selectively set to the low level by the drive scanner 407, then the scanning signals ws[401], ws[402],.. to the scanning lines WSL401, WSL402,... are selectively set to the low level by the write scanner 404.

[0339] As a result, in the pixel circuit 401, as shown in FIG. 38D, the TFT 415 and TFT 412 turn off and the writing of the input signal to the capacitor C411 as the pixel capacitor ends.

[0340] At this time, the capacitor C411 holds a potential equal to the difference (Vcc-Vin) between the power source voltage Vcc and the input voltage Vin regardless of the potential of the capacitor end.

[0341] After this, as shown in FIGS. 40A to 40F, the drive signals ds[401], ds[402],... to the drive lines DSL401,

DSL402,... are held at the low level by the drive scanner 405, the drive signals ds[421], ds[422],... to the drive lines DSL421, DSL422,... are held at the low level by the drive scanner 407, the scanning signals ws[401], ws[402],.. to the scanning lines WSL401, WSL402,... are held at the low level by the write scanner 404, and in that state the drive signals ds[411], ds[412],... to the drive lines DSL411, DSL412,... are selectively set to the high level by the drive scanner 406.

[0342] As a result, in the pixel circuit 401, as shown in FIG. 38E, the TFT414 turns on. By the TFT 414 turning on, the gate-source potential of the drive transistor TFT411 becomes the potential difference (Vcc-Vin) charged into the capacitor C411 as the pixel capacitor. Further, as shown in FIG. 40H, regardless of the value of the source potential of the TFT 411, the potential difference is held and the source potential of the drive transistor 411 rises to Vcc.

[0343] Further, as shown in FIGS. 40A to 40F, the drive signals ds[421], ds[422],... to the drive lines DSL421, DSL422,... are held at the low level by the drive scanner 407, the scanning signals ws[401], ws[402],.. to the scanning lines WSL401, WSL402,... are held at the low level by the write scanner 404, the drive signals ds[411], ds[412],... to the drive lines DSL411, DSL412,... are held at the high level by the drive scanner 406, and in that state the drive signals ds[401], ds[402],... to the drive lines DSL401, DSL402,... are selectively held at the high level by the drive scanner 405.

[0344] As a result, at the pixel circuit 401, as shown in FIG. 38F, TFT 413 turns on.

[0345] By turning the TFT 413 on, the source potential of the TFT 411 falls. In this way, despite the fact that the source potential of the TFT 411 as the drive transistor fluctuates, since there is a capacitance between the gate of the TFT 411 and the anode of the EL light emitting element 416, the gate-source potential of the TFT 411 is constantly held at (Vcc-Vin).

[0346] At this time, the TFT 411 as the drive transistor is driven in the saturated region, so the current value Ids flowing to the TFT 411 becomes the value shown in the above-mentioned equation 1. This is determined by the gate-source voltage Vgs of the drive transistor TFT 411.

[0347] This current also flows to the EL light emitting element 416. The EL light emitting element 416 emits light by a luminance proportional to the current value.

[0348] The equivalent circuit of the EL light emitting element can be described by transistors as shown in FIG. 39, so in FIG. 39, the potential of the node ND411 stops after rising to the gate potential at which the current Ids flows to the light emitting element 416. Along with the change of this potential, the potential of the node ND412 also changes. If the final potential of the node ND411 is Vx, the potential of the node ND412 is described as (Vx+Vcc-Vin) and the gate-source potential of the TFT 411 as the drive transistor is held at (Vx+Vcc).

[0349] Due to the above, even if the EL light emitting element 416 deteriorates in I-V characteristic along with the increase in the emitting time, in the pixel circuit 401 of the sixth embodiment, the potential of the node ND411 drops while the gate-source potential of the TFT 411 as the drive transistor is held constant, so the current flowing through the TFT 411 does not change.

[0350] Accordingly, the current flowing through the EL light emitting element 416 also does not change. Even if the I-V characteristic of the EL light emitting element 416 deteriorates, a current corresponding to the gate-source potential (Vcc-Vin) constantly flows. Therefore, the past problem relating to deterioration along with elapse of the EL can be solved.

[0351] Further, in the circuit of the present invention, since the fixed potential is only the power source Vcc in the pixel, no GND line which has to be laid thick is necessary. Due to this, it is possible to reduce the pixel area. Further, in the non-emitting period, the TFTs 413 and 414 are off and no current is run through the circuit. That is, by not running current through the circuit during the non-emitting period, it is possible to reduce the power consumption.

[0352] As explained above, according to the sixth embodiment, the source-follower output with no deterioration in luminance even with a change in the I-V characteristic of an EL element along with elapse becomes possible.

[0353] A source-follower circuit of n-channel transistors becomes possible, so it is possible to use an n-channel transistor as a drive element of a light emitting element while using current anode-cathode electrodes.

[0354] Further, it is possible to configure transistors of a pixel circuit by only n-channel transistors and possible to use the a-Si process in the fabrication of the TFTs. Due to this, a reduction of the cost of TFT boards becomes possible.

[0355] Further, in the present invention, it is possible to use the pixel power source for the fixed potential, so it is possible to reduce the pixel area and possible to expect higher definition of the panel.

[0356] Still further, by not running a current through the circuit while the EL light emitting element is not emitting light, the power consumption can be reduced.

[0357] As explained above, according to the present invention, source-follower output with no deterioration in luminance even with a change in the I-V characteristic of an EL element along with elapse becomes possible.

[0358] A source-follower circuit of n-channel transistors becomes possible, so it is possible to use an n-channel transistor as a drive element of a light emitting element while using current anode-cathode electrodes.

[0359] Further, it is possible to configure transistors of a pixel circuit by only n-channel transistors and possible to use the a-Si process in the fabrication of the TFTs. Due to this, a reduction of the cost of TFT boards becomes possible.

[0360] Further, it is possible to write the signal line voltage in a short time even with for example a black signal and possible to obtain an image quality with a high uniformity. Simultaneously, it is possible to increase the signal line capacity and suppress leakage characteristics.

[0361] Further, it is possible to slash the number of GND lines at the TFT side and layout of the surrounding lines and

layout of the pixels become easier.

[0362] Further, it is possible to slash the number of GND lines at the TFT side, possible to eliminate the overlap of the GND lines and Vcc lines at the TFT board, and possible to improve the yield.

[0363] Further, it is possible to slash the number of GND lines at the TFT side, possible to eliminate the overlap of the GND lines and Vcc lines at the TFT board so as to lay the Vcc lines at a low resistance, and possible to obtain an image quality of a high uniformity.

[0364] Further, in the present invention, it is possible to use the pixel power source for the fixed potential, so it is possible to reduce the pixel area and possible to look forward to higher definition of the panel.

[0365] Still further, by not running a current through the circuit while the EL light emitting element is not emitting light, the power consumption can be reduced.

[0366] Still further, it is possible to make the input signal voltage near the GND and possible to lighten the load on the external drive system.

INDUSTRIAL APPLICABILITY

[0367] According to the pixel circuit, display device, and method of driving a pixel circuit of the present invention, source-follower output with no deterioration in luminance even with a change in the I-V characteristic of an EL element along with elapse becomes possible and a source-follower circuit of n-channel transistors becomes possible, so it is possible to use an n-channel transistor as a drive element of an EL element while using current anode-cathode electrodes, therefore the invention can be applied even to a large-sized and high definition active matrix type display.

Claims

1. A pixel circuit (101) comprising an electro-optic element (114) with a luminance changing according to a flowing current, comprising:

a data line (DTL101) through which a data signal in accordance with luminance information is supplied;
a first control line (WSL101);
first and second nodes (ND111, ND112);
first and second reference potentials (Vcc, GND);
a drive transistor (111) with a drain connected to said first reference potential (Vcc) or second reference potential (GND), and a gate connected to said second node (ND112), said drive transistor (111) forming a current supply line between a first terminal and a second terminal and controlling a current flowing through said current supply line in accordance with the potential of a control terminal connected to said second node (ND112);
a pixel capacitance element (C111) connected between said first node (ND111) and said second node (ND112);
a first switch (112) connected between said data line (DTL101) and either of a first terminal or second terminal of said pixel capacitance element (C111) and controlled in conduction by said first control line (WSL101); and
characterized by further comprising a first circuit suitable for making a potential of said first node (ND111) change to a fixed potential while said electro-optic element (114) is not emitting light; and in that
said current supply line of the drive transistor (111), said first node (ND111), and said electro-optic element (114) being connected in series between said first reference potential (Vcc) and second reference potential (GND).

2. A pixel circuit as set forth in claim 1, wherein:

said circuit further comprises a second control line (DSL101); and wherein:

said drive transistor is a field effect transistor with a source connected to said first node (ND111), and said first circuit includes a second switch (113) connected between said first node (ND111) and a fixed potential (GND) and is controlled in conduction by said second control line (DSL101).

3. A pixel circuit as set forth in claim 2, wherein when said electro-optic element (114) is driven,
as a first stage, said first switch (112) is held in a non-conductive state by said first control line (WSL101), said second switch (113) is held in a conductive state by said second control line (DSL101), and said first node (ND111) is connected to a fixed potential;
as a second stage, said first switch (112) is held in a conductive state by said first control line (WSL101), data to be propagated over said data line (DTL101) is written in said pixel capacitance element (C111), then said first switch

(112) is held in a non-conductive state; and
as a third stage, said second switch (112) is held in a non-conductive state by said second control line (DSL101).

4. A pixel circuit as set forth in claim 1, wherein:

said circuit further comprises a second control line (DSL201); and wherein
said first circuit includes a second switch (213) connected between a source of said field effect transistor (211) and an electro-optic element (214) and is controlled in conduction by said second control line (DSL201).

5. A pixel circuit as set forth in claim 4, wherein when said electro-optic element is driven,
as a first stage, said first switch is held in a non-conductive state by said first control line, and said second switch is held in a non-conductive state by said second control line;
as a second stage, said first switch is held in a conductive state by said first control line, data to be propagated over said data line is written in said pixel capacitance element, then said first switch is held in a non-conductive state; and
as a third stage, said second switch is held in a conductive state by said second control line.

6. A pixel circuit as set forth in claim 1, wherein:

said circuit further comprises a second control line;
said drive transistor is a field effect transistor with a source connected to said first node, and
said first circuit includes a second switch connected between said first node and said electro-optic element and is controlled in conduction by said second control line.

7. A pixel circuit as set forth in claim 6, wherein when said electro-optic element is driven,
as a first stage, said first switch is held in a non-conductive state by said first control line, and said second switch is held in a non-conductive state by said second control line;
as a second stage, said first switch is held in a conductive state by said first control line, data to be propagated over said data line is written in said pixel capacitance element, then said first switch is held in a non-conductive state; and
as a third stage, said second switch is held in a conductive state by said second control line.

8. A pixel circuit as set forth in claim 1, further comprising a second circuit making said first node be held at a fixed potential when said first switch is held in a conductive state and writes data propagated through the data line.

9. A pixel circuit as set forth in claim 8, wherein:

said circuit further comprises second and third control lines and a voltage supply;
said first circuit includes a second switch connected between a source of said field effect transistor and said electro-optic element and is controlled in conduction by said second control line; and
said second circuit includes a third switch connected between said first node and said voltage source and is controlled in conduction by said third control line.

10. A pixel circuit as set forth in claim 9, wherein when said electro-optic element is driven,
as a first stage, said first switch is held in a non-conductive state by said first control line, said second switch is held in a non-conductive state by said second control line, and said third switch is held in a non-conductive state by said third control line;
as a second stage, said first switch is held in a conductive state by said first control line, said third switch is held in a conductive state by said third control line, said first node is held at a predetermined potential, and, in that state, data to be propagated over said data line is written in said pixel capacitance element, then said first switch is held in a non-conductive state by said first control line; and
as a third stage, said third switch is held in a non-conductive state by said third control line and said second switch is held in a conductive state by said second control line.

11. A pixel circuit as set forth in claim 8, wherein
said circuit further comprises second and third control lines and a voltage source;
said drive transistor is a field effect transistor with a source connected to said first node;
said first circuit includes a second switch connected between said first node and said electro-optic element and is controlled in conduction by said second control line; and
said second circuit includes a third switch connected between said first node and said voltage source and is controlled

in conduction by said third control line.

12. A pixel circuit as set forth in claim 11, wherein when said electro-optic element is driven,
as a first stage, said first switch is held in a non-conductive state by said first control line, said second switch is held in a non-conductive state by said second control line, and said third switch is held in a non-conductive state by said third control line;
as a second stage, said first switch is held in a conductive state by said first control line, said third switch is held in a conductive state by said third control line, said first node is held at a predetermined potential, and, in that state, data to be propagated over said data line is written in said pixel capacitance element, then said first switch is held in a non-conductive state by said first control line; and
as a third stage, said third switch is held in a non-conductive state by said third control line and said second switch is held in a conductive state by said second control line.

13. A pixel circuit as set forth in claim 1, further comprising a second circuit making said second node be held at a fixed potential when said first switch is held in a conductive state and writes data propagated through the data line.

14. A pixel circuit as set forth in claim 13, wherein said fixed potential is said first reference potential or second reference potential.

15. A pixel circuit as set forth in claim 13, wherein:

said circuit further comprises second, third, and fourth control lines;
said drive transistor is a field effect transistor with a source connected to said first node;
said first circuit includes a second switch connected between said first node and said electro-optic element and is controlled in conduction by said second control line and a third switch connected between a source of said field effect transistor and said first node and is controlled in conduction by said third control line; and
said second circuit includes a fourth switch connected betweend said first node and said fixed potential and is controlled in conduction by said fourth control line.

16. A pixel circuit as set forth in claim 15, wherein when said electro-optic element is driven,
as a first stage, said first switch is held in a non-conductive state by said first control line, said second switch is held in a non-conductive state by said second control line, said third switch is held in a non-conductive state by said third control line, and said fourth switch is held in a non-conductive state by said fourth control line;
as a second stage, said first switch is held in a conductive state by said first control line, said fourth switch is held in a conductive state by said fourth control line, said second node is held at a fixed potential, and, in that state, data to be propagated over said data line is written in said pixel capacitance element, then said first switch is held in a non-conductive state by said first control line, and said fourth switch is held at a non-conductive state by said fourth control line; and
as a third stage, said second switch is held in a conductive state by said second control line and said third switch is held in a conductive state by said third control line.

17. A display device comprising:

a plurality of pixel circuits arranged in a matrix;
a data line arranged for each column of said matrix array of pixel circuits and through which a data signal in accordance with luminance information is supplied;
a first control line arranged for each row of said matrix array of pixel circuits; and
first and second reference potentials;
each said pixel circuit defined as in claim 1.

18. A display device as set forth in claim 17, further comprising a second circuit for making said first node be held at a predetermined potential when said first switch is held in the conductive state and writes data to be propagated through the data line.

19. A display device as set forth in claim 17, further comprising a second circuit for making said second node be held at a fixed potential when said first switch is held in the conductive state and writes data to be propagated through the data line.

20. A method of driving a pixel circuit having:

an electro-optic element with a luminance changing according to a flowing current,
a data line through which a data signal in accordance with luminance information is supplied;
first and second nodes;
first and second reference potentials;
a field effect transistor with a drain connected to said first reference potential or second reference potential, a source connected to said first node, and a gate connected to said second node, said field effect transistor forming a current supply line between a first terminal and a second terminal and controlling a current flowing through said current supply line in accordance with the potential of a control terminal connected to said second node ;
a pixel capacitance element connected between said first node and said second node;
a first switch connected between said data line and either of a first terminal or a second terminal of said pixel capacitance element; and
a first circuit for making a potential of said first node change to a fixed potential;
said current supply line of the drive transistor, said first node, and said electro-optic element being connected in series between said first reference potential and second reference potential,
said method of driving a pixel circuit comprising steps of:

making a potential of said first node change to a fixed potential by said first circuit in the state with said first switch held at a non-conductive state,
holding said first switch at a conductive state, writing data propagated over said data line in said pixel capacitance element, then holding said first switch in the non-conductive, and
stopping the operation for making a potential of said first node of said first circuit change to a fixed potential.

Patentansprüche

1. Pixel-Schaltung (101), umfassend ein elektrooptisches Element (114) mit einer Leuchtdichte, die sich entsprechend einem fließenden Strom ändert, aufweisend:

eine Datenleitung (DTL101), über welche ein Datensignal gemäß Leuchtdichte-Informationen zugeführt wird;
eine erste Steuerleitung (WSL101);
einen ersten und einen zweiten Knoten (ND111, ND112);
ein erstes und ein zweites Referenzpotenzial (Vcc, GND) ;
einen Ansteuertransistor (111) mit einem Drain, der mit dem ersten Referenzpotenzial (Vcc) oder dem zweiten Referenzpotenzial (GND) verbunden ist, und einem Gate, das mit dem zweiten Knoten (ND112) verbunden ist, wobei der Ansteuertransistor (111) eine Stromversorgungsleitung zwischen einem ersten Anschluss und einem zweiten Anschluss ausbildet und einen durch die Stromversorgungsleitung fließenden Strom entsprechend dem Potenzial eines Steueranschlusses steuert, der mit dem zweiten Knoten (ND112) verbunden ist;
ein Pixelkapazitätselement (C111), das zwischen den ersten Knoten (ND111) und den zweiten Knoten (ND112) geschaltet ist;
einen ersten Schalter (112), der zwischen die Datenleitung (DTL101) und entweder den ersten Anschluss oder den zweiten Anschluss des Pixelkapazitätselements (C111) geschaltet ist und dessen Leitfähigkeit von der ersten Steuerleitung (WSL101) gesteuert wird; und
dadurch gekennzeichnet, dass sie weiterhin eine erste Schaltung umfasst, welche dazu geeignet ist, zu veranlassen, dass sich ein Potenzial des ersten Knotens (ND111) in ein festes Potenzial wandelt, während das elektrooptische Element (114) kein Licht emittiert; und dadurch, dass
die Stromversorgungsleitung des Ansteuertransistors (111), der erste Knoten (ND111) und das elektrooptische Element (114) zwischen das erste Referenzpotenzial (Vcc) und das zweite Referenzpotenzial (GND) in Reihe geschaltet sind.

2. Pixel-Schaltung nach Anspruch 1, wobei:

die Schaltung weiterhin eine zweite Steuerleitung (DSL101) aufweist; und wobei:

der Ansteuertransistor ein Feldeffekttransistor mit einer Source ist, welche mit dem ersten Knoten (ND111) verbunden ist, und

die erste Schaltung einen zweiten Schalter (113) aufweist, der zwischen den ersten Knoten (ND111) und ein festes Potenzial (GND) geschaltet ist, und deren Leitfähigkeit durch die zweite Steuerleitung (DSL101) gesteuert wird.

3. Pixel-Schaltung nach Anspruch 2, wobei, wenn das elektrooptische Element (114) angesteuert wird,
als erste Phase der erste Schalter (112) durch die erste Steuerleitung (WSL101) in einem nicht leitfähigen Zustand gehalten wird, der zweite Schalter (113) durch die zweite Steuerleitung (DSL101) in einem leitfähigen Zustand gehalten wird und der erste Knoten (ND111) mit einem festen Potenzial verbunden wird;
als zweite Phase der erste Schalter (112) durch die erste Steuerleitung (WSL101) in einem leitfähigen Zustand gehalten wird, über die Datenleitung (DTL101) zu übermittelnde Daten in das Pixelkapazitätselement (C111) geschrieben werden und dann der erste Schalter (112) in einem nicht leitfähigen Zustand gehalten wird; und
als dritte Phase der zweite Schalter (112) durch die zweite Steuerleitung (DSL101) in einem nicht leitfähigen Zustand gehalten wird.

4. Pixel-Schaltung nach Anspruch 1, wobei:

die Schaltung weiterhin eine zweite Steuerleitung (DSL201) aufweist; und wobei
die erste Schaltung einen zweiten Schalter (213) aufweist, der zwischen eine Source des Feldeffekttransistors (211) und ein elektrooptisches Element (214) geschaltet ist, und deren Leitfähigkeit durch die zweite Steuerleitung (DSL201) gesteuert wird.

5. Pixel-Schaltung nach Anspruch 4, wobei, wenn das elektrooptische Element angesteuert wird,
als erste Phase der erste Schalter durch die erste Steuerleitung in einem nicht leitfähigen Zustand gehalten wird und der zweite Schalter durch die zweite Steuerleitung in einem nicht leitfähigen Zustand gehalten wird;
als zweite Phase der erste Schalter durch die erste Steuerleitung in einem leitfähigen Zustand gehalten wird, über die Datenleitung zu übermittelnde Daten in das Pixelkapazitätselement geschrieben werden und dann der erste Schalter in einem nicht leitfähigen Zustand gehalten wird; und
als dritte Phase der zweite Schalter durch die zweite Steuerleitung in einem leitfähigen Zustand gehalten wird.

6. Pixel-Schaltung nach Anspruch 1, wobei:

die Schaltung weiterhin eine zweite Steuerleitung aufweist;
der Ansteuertransistor ein Feldeffekttransistor mit einer Source ist, welche mit dem ersten Knoten verbunden ist, und
die erste Schaltung einen zweiten Schalter aufweist, der zwischen den ersten Knoten und das elektrooptische Element geschaltet ist, und deren Leitfähigkeit durch die zweite Steuerleitung gesteuert wird.

7. Pixel-Schaltung nach Anspruch 6, wobei, wenn das elektrooptische Element angesteuert wird,
als erste Phase der erste Schalter durch die erste Steuerleitung in einem nicht leitfähigen Zustand gehalten wird und der zweite Schalter durch die zweite Steuerleitung in einem nicht leitfähigen Zustand gehalten wird;
als zweite Phase der erste Schalter durch die erste Steuerleitung in einem leitfähigen Zustand gehalten wird, über die Datenleitung zu übermittelnde Daten in das Pixelkapazitätselement geschrieben werden und dann der erste Schalter in einem nicht leitfähigen Zustand gehalten wird; und
als dritte Phase der zweite Schalter durch die zweite Steuerleitung in einem leitfähigen Zustand gehalten wird.

8. Pixel-Schaltung nach Anspruch 1, weiterhin aufweisend eine zweite Schaltung, welche veranlasst, dass der erste Knoten auf einem festen Potenzial gehalten wird, wenn der erste Schalter in einem leitfähigen Zustand gehalten wird und Daten schreibt, die über die Datenleitung übermittelt werden.

9. Pixel-Schaltung nach Anspruch 8, wobei:

die Schaltung weiterhin eine zweite und eine dritte Steuerleitung und eine Spannungszufuhr aufweist;
die erste Schaltung einen zweiten Schalter aufweist, der zwischen eine Source des Feldeffekttransistors und das elektrooptische Element geschaltet ist, und deren Leitfähigkeit durch die zweite Steuerleitung gesteuert wird; und
die zweite Schaltung einen dritten Schalter aufweist, der zwischen den ersten Knoten und die Spannungsquelle geschaltet ist, und deren Leitfähigkeit durch die dritte Steuerleitung gesteuert wird.

10. Pixel-Schaltung nach Anspruch 9, wobei, wenn das elektrooptische Element angesteuert wird,
als erste Phase der erste Schalter durch die erste Steuerleitung in einem nicht leitfähigen Zustand gehalten wird, der zweite Schalter durch die zweite Steuerleitung in einem nicht leitfähigen Zustand gehalten wird und der dritte Schalter durch die dritte Steuerleitung in einem nicht leitfähigen Zustand gehalten wird;
als zweite Phase der erste Schalter durch die erste Steuerleitung in einem leitfähigen Zustand gehalten wird, der dritte Schalter durch die dritte Steuerleitung in einem leitfähigen Zustand gehalten wird, der erste Knoten auf einem vorbestimmten Potenzial gehalten wird und in jenem Zustand über die Datenleitung zu übermittelnde Daten in das Pixelkapazitätselement geschrieben werden und dann der erste Schalter durch die erste Steuerleitung in einem nicht leitfähigen Zustand gehalten wird; und
als dritte Phase der dritte Schalter durch die dritte Steuerleitung in einem nicht leitfähigen Zustand gehalten wird und der zweite Schalter durch die zweite Steuerleitung in einem leitfähigen Zustand gehalten wird.

11. Pixel-Schaltung nach Anspruch 8, wobei
die Schaltung weiterhin eine zweite und eine dritte Steuerleitung und eine Spannungsquelle aufweist;
der Ansteuertransistor ein Feldeffekttransistor mit einer Source ist, welche mit dem ersten Knoten verbunden ist;
die erste Schaltung einen zweiten Schalter aufweist, der zwischen den ersten Knoten und das elektrooptische Element geschaltet ist, und deren Leitfähigkeit durch die zweite Steuerleitung gesteuert wird; und
die zweite Schaltung einen dritten Schalter aufweist, der zwischen den ersten Knoten und die Spannungsquelle geschaltet ist, und deren Leitfähigkeit durch die dritte Steuerleitung gesteuert wird.

12. Pixel-Schaltung nach Anspruch 11, wobei, wenn das elektrooptische Element angesteuert wird,
als erste Phase der erste Schalter durch die erste Steuerleitung in einem nicht leitfähigen Zustand gehalten wird, der zweite Schalter durch die zweite Steuerleitung in einem nicht leitfähigen Zustand gehalten wird und der dritte Schalter durch die dritte Steuerleitung in einem nicht leitfähigen Zustand gehalten wird;
als zweite Phase der erste Schalter durch die erste Steuerleitung in einem leitfähigen Zustand gehalten wird, der dritte Schalter durch die dritte Steuerleitung in einem leitfähigen Zustand gehalten wird, der erste Knoten auf einem vorausbestimmten Potenzial gehalten wird und in jenem Zustand über die Datenleitung zu übermittelnde Daten in das Pixelkapazitätselement geschrieben werden und dann der erste Schalter durch die erste Steuerleitung in einem nicht leitfähigen Zustand gehalten wird; und
als dritte Phase der dritte Schalter durch die dritte Steuerleitung in einem nicht leitfähigen Zustand gehalten wird und der zweite Schalter durch die zweite Steuerleitung in einem leitfähigen Zustand gehalten wird.

13. Pixel-Schaltung nach Anspruch 1, weiterhin aufweisend eine zweite Schaltung, welche veranlasst, dass der zweite Knoten auf einem festen Potenzial gehalten wird, wenn der erste Schalter in einem leitfähigen Zustand gehalten wird und Daten schreibt, die über die Datenleitung übermittelt werden.

14. Pixel-Schaltung nach Anspruch 13, wobei das feste Potenzial das erste Referenzpotenzial oder das zweite Referenzpotenzial ist.

15. Pixel-Schaltung nach Anspruch 13, wobei:

die Schaltung weiterhin eine zweite, eine dritte und eine vierte Steuerleitung aufweist;
der Ansteuertransistor ein Feldeffekttransistor mit einer Source ist, welche mit dem ersten Knoten verbunden ist;
die erste Schaltung einen zweiten Schalter aufweist, der zwischen den ersten Knoten und das elektrooptische Element geschaltet ist, und deren Leitfähigkeit durch die zweite Steuerleitung und einen dritten Schalter gesteuert wird, der zwischen eine Source des Feldeffekttransistors und den ersten Knoten geschaltet ist, und deren Leitfähigkeit durch die dritte Steuerleitung gesteuert wird; und
die zweite Schaltung einen vierten Schalter aufweist, der zwischen den ersten Knoten und das feste Potenzial geschaltet ist, und deren Leitfähigkeit durch die vierte Steuerleitung gesteuert wird.

16. Pixel-Schaltung nach Anspruch 15, wobei, wenn das elektrooptische Element angesteuert wird,
als erste Phase der erste Schalter durch die erste Steuerleitung in einem nicht leitfähigen Zustand gehalten wird, der zweite Schalter durch die zweite Steuerleitung in einem nicht leitfähigen Zustand gehalten wird, der dritte Schalter durch die dritte Steuerleitung in einem nicht leitfähigen Zustand gehalten wird und der vierte Schalter durch die vierte Steuerleitung in einem nicht leitfähigen Zustand gehalten wird;
als zweite Phase der erste Schalter durch die erste Steuerleitung in einem leitfähigen Zustand gehalten wird, der vierte Schalter durch die vierte Steuerleitung in einem leitfähigen Zustand gehalten wird, der zweite Knoten auf einem festen Potenzial gehalten wird und in jenem Zustand über die Datenleitung zu übermittelnde Daten in das

Pixelkapazitätselement geschrieben werden und dann der erste Schalter durch die erste Steuerleitung in einem nicht leitfähigen Zustand gehalten wird und der vierte Schalter durch die vierte Steuerleitung in einem nicht leitfähigen Zustand gehalten wird; und
als dritte Phase der zweite Schalter durch die zweite Steuerleitung in einem leitfähigen Zustand gehalten wird und der dritte Schalter durch die dritte Steuerleitung in einem leitfähigen Zustand gehalten wird.

17. Display-Einrichtung, aufweisend:

mehrere in einer Matrix angeordnete Pixel-Schaltungen;
eine für jede Spalte der Matrix-Anordnung von Pixel-Schaltungen angeordnete Datenleitung, über welche ein Datensignal gemäß Leuchtdichte-Informationen zugeführt wird;
eine für jede Reihe der Matrix-Anordnung von Pixel-Schaltungen angeordnete erste Steuerleitung; und
ein erstes und ein zweites Referenzpotenzial;
wobei jede der Pixel-Schaltungen wie in Anspruch 1 definiert ist.

18. Display-Einrichtung nach Anspruch 17, weiterhin aufweisend eine zweite Schaltung, welche veranlasst, dass der erste Knoten auf einem vorbestimmten Potenzial gehalten wird, wenn der erste Schalter in dem leitfähigen Zustand gehalten wird und über die Datenleitung zu übermittelnde Daten schreibt.

19. Display-Einrichtung nach Anspruch 17, weiterhin aufweisend eine zweite Schaltung, welche veranlasst, dass der zweite Knoten auf einem festen Potenzial gehalten wird, wenn der erste Schalter in dem leitfähigen Zustand gehalten wird und über die Datenleitung zu übermittelnde Daten schreibt.

20. Verfahren zum Ansteuern einer Pixel-Schaltung, die aufweist:

ein elektrooptisches Element mit einer Leuchtdichte, die sich entsprechend einem fließenden Strom ändert,
eine Datenleitung, über welche ein Datensignal gemäß Leuchtdichte-Informationen zugeführt wird;
einen ersten und einen zweiten Knoten;
ein erstes und ein zweites Referenzpotenzial;
einen Feldeffekttransistor mit einem Drain, der mit dem ersten Referenzpotenzial oder dem zweiten Referenzpotenzial verbunden ist, einer Source, die mit dem ersten Knoten verbunden ist, und einem Gate, das mit dem zweiten Knoten verbunden ist, wobei der Feldeffekttransistor eine Stromversorgungsleitung zwischen einem ersten Anschluss und einem zweiten Anschluss ausbildet und einen durch die Stromversorgungsleitung fließenden Strom entsprechend dem Potenzial eines Steueranschlusses steuert, der mit dem zweiten Knoten verbunden ist;
ein Pixelkapazitätselement, das zwischen den ersten Knoten und den zweiten Knoten geschaltet ist;
einen ersten Schalter, der zwischen die Datenleitung und entweder einen ersten Anschluss oder einen zweiten Anschluss des Pixelkapazitätselements geschaltet ist; und
eine erste Schaltung, welche veranlasst, dass sich ein Potenzial des ersten Knotens in ein festes Potenzial wandelt;
wobei die Stromversorgungsleitung des Ansteuertransistors, der erste Knoten und das elektrooptische Element zwischen das erste Referenzpotenzial und das zweite Referenzpotenzial in Reihe geschaltet sind,
wobei das Verfahren zum Ansteuern einer Pixel-Schaltung Schritte umfasst zum:

Veranlassen durch die erste Schaltung, dass sich ein Potenzial des ersten Knotens in ein festes Potenzial wandelt, in dem Zustand, bei welchem der erste Schalter in einem nicht leitfähigen Zustand gehalten wird,
Halten des ersten Schalters in einem leitfähigen Zustand, Schreiben von Daten, die über die Datenleitung übermittelt werden, in das Pixelkapazitätselement und anschließenden Halten des ersten Schalters in dem nicht leitfähigen, und
Anhalten des Vorgangs zum Veranlassen, dass sich ein Potenzial des ersten Knotens der ersten Schaltung in ein festes Potenzial wandelt.

Revendications

1. Circuit de pixel (101), comprenant un élément électro-optique (114) avec une luminance changeant selon un courant passant, comprenant :

une ligne de données (DTL101) à travers laquelle un signal de données conformément à des informations de luminance est fourni ;
une première ligne de commande (WSL101) ;
des premier et second noeuds (ND111, ND112) ;
des premier et second potentiels de référence (Vcc, GND) ;
un transistor d'excitation (111) avec un drain connecté audit premier potentiel de référence (Vcc) ou second potentiel de référence (GND), et une grille connectée audit second noeud (ND112), ledit transistor d'excitation (111) formant une ligne d'alimentation en courant entre une première borne et une seconde borne et commandant un courant passant à travers ladite ligne d'alimentation en courant conformément au potentiel d'une borne de commande connectée audit second noeud (ND112) ;
un élément à capacité électrique de pixel (C111) connecté entre ledit premier noeud (ND111) et ledit second noeud (ND112) ;
un premier commutateur (112) connecté entre ladite ligne de données (DTL101) et l'une ou l'autre d'une première borne ou d'une seconde borne dudit élément à capacité électrique de pixel (C111) et commandé en conduction par ladite première ligne de commande (WSL101) ; et
caractérisé en ce qu'il comprend en outre un premier circuit approprié pour faire en sorte qu'un potentiel dudit premier noeud (ND111) passe à un potentiel fixe alors que ledit élément électro-optique (114) n'émet pas de lumière ; et **en ce que** ladite ligne d'alimentation en courant du transistor d'excitation (111), ledit premier noeud (ND111), et ledit élément électro-optique (114) sont connectés en série entre lesdits premier potentiel de référence (Vcc) et second potentiel de référence (GND).

2. Circuit de pixel selon la revendication 1, dans lequel :

ledit circuit comprend en outre une deuxième ligne de commande (DSL101) ; et dans lequel :

ledit transistor d'excitation est un transistor à effet de champ avec une source connectée audit premier noeud (ND111), et
ledit premier circuit inclut un deuxième commutateur (113) connecté entre ledit premier noeud (ND111) et un potentiel fixe (GND) et est commandé en conduction par ladite deuxième ligne de commande (DSL101).

3. Circuit de pixel selon la revendication 2, dans lequel lorsque ledit élément électro-optique (114) est excité,
en tant que premier stade, ledit premier commutateur (112) est maintenu dans un état non conducteur par ladite première ligne de commande (WSL101), ledit deuxième commutateur (113) est maintenu dans un état conducteur par ladite deuxième ligne de commande (DSL101), et ledit premier noeud (ND111) est connecté à un potentiel fixe ;
en tant que deuxième stade, ledit premier commutateur (112) est maintenu dans un état conducteur par ladite première ligne de commande (WSL101), des données destinées à être propagées sur ladite ligne de données (DTL101) sont écrites dans ledit élément à capacité électrique de pixel (C111), puis ledit premier commutateur (112) est maintenu dans un état non conducteur ; et
en tant que troisième stade, ledit deuxième commutateur (112) est maintenu dans un état non conducteur par ladite deuxième ligne de commande (DSL101).

4. Circuit de pixel selon la revendication 1, dans lequel :

ledit circuit comprend en outre une deuxième ligne de commande (DSL201) ; et dans lequel
ledit premier circuit inclut un deuxième commutateur (213) connecté entre une source dudit transistor à effet de champ (211) et un élément électro-optique (214) et est commandé en conduction par ladite deuxième ligne de commande (DSL201).

5. Circuit de pixel selon la revendication 4, dans lequel, lorsque ledit élément électro-optique est excité,
en tant que premier stade, ledit premier commutateur est maintenu dans un état non conducteur par ladite première ligne de commande, et ledit deuxième commutateur est maintenu dans un état non conducteur par ladite deuxième ligne de commande ;
en tant que deuxième stade, ledit premier commutateur est maintenu dans un état conducteur par ladite première ligne de commande, des données destinées à être propagées sur ladite ligne de données sont écrites dans ledit élément à capacité électrique de pixel, puis ledit premier commutateur est maintenu dans un état non conducteur ; et
en tant que troisième stade, ledit deuxième commutateur est maintenu dans un état conducteur par ladite deuxième ligne de commande.

6. Circuit de pixel selon la revendication 1, dans lequel :

ledit circuit comprend en outre une deuxième ligne de commande ;
ledit transistor d'excitation est un transistor à effet de champ avec une source connectée audit premier noeud, et ledit premier circuit inclut un deuxième commutateur connecté entre ledit premier noeud et ledit élément électro-optique et est commandé en conduction par ladite deuxième ligne de commande.

7. Circuit de pixel selon la revendication 6, dans lequel, lorsque ledit élément électro-optique est excité,
en tant que premier stade, ledit premier commutateur est maintenu dans un état non conducteur par ladite première ligne de commande, et ledit deuxième commutateur est maintenu dans un état non conducteur par ladite deuxième ligne de commande ;
en tant que deuxième stade, ledit premier commutateur est maintenu dans un état conducteur par ladite première ligne de commande, des données destinées à être propagées sur ladite ligne de données sont écrites dans ledit élément à capacité électrique de pixel, puis ledit premier commutateur est maintenu dans un état non conducteur ; et
en tant que troisième stade, ledit deuxième commutateur est maintenu dans un état conducteur par ladite deuxième ligne de commande.

8. Circuit de pixel selon la revendication 1, comprenant en outre un second circuit faisant en sorte que ledit premier noeud soit maintenu à un potentiel fixe lorsque ledit premier commutateur est maintenu dans un état conducteur et écrit des données propagées à travers la ligne de données.

9. Circuit de pixel selon la revendication 8, dans lequel :

ledit circuit comprend en outre des deuxième et troisième lignes de commande et une alimentation en tension ;
ledit premier circuit inclut un deuxième commutateur connecté entre une source dudit transistor à effet de champ et ledit élément électro-optique et est commandé en conduction par ladite deuxième ligne de commande ; et
ledit second circuit inclut un troisième commutateur connecté entre ledit premier noeud et ladite source de tension et est commandé en conduction par ladite troisième ligne de commande.

10. Circuit de pixel selon la revendication 9, dans lequel lorsque ledit élément électro-optique est excité,
en tant que premier stade, ledit premier commutateur est maintenu dans un état non conducteur par ladite première ligne de commande, ledit deuxième commutateur est maintenu dans un état non conducteur par ladite deuxième ligne de commande, et ledit troisième commutateur est maintenu dans un état non conducteur par ladite troisième ligne de commande ;
en tant que deuxième stade, ledit premier commutateur est maintenu dans un état conducteur par ladite première ligne de commande, ledit troisième commutateur est maintenu dans un état conducteur par ladite troisième ligne de commande, ledit premier noeud est maintenu à un potentiel prédéterminé, et, dans cet état, des données destinées à être propagées sur ladite ligne de données sont écrites dans ledit élément à capacité électrique de pixel, puis ledit premier commutateur est maintenu dans un état non conducteur par ladite première ligne de commande ; et
en tant que troisième stade, ledit troisième commutateur est maintenu dans un état non conducteur par ladite troisième ligne de commande et ledit deuxième commutateur est maintenu dans un état conducteur par ladite deuxième ligne de commande.

11. Circuit de pixel selon la revendication 8, dans lequel
ledit circuit comprend en outre des deuxième et troisième lignes de commande et une source de tension ;
ledit transistor d'excitation est un transistor à effet de champ avec une source connectée audit premier noeud ;
ledit premier circuit inclut un deuxième commutateur connecté entre ledit premier noeud et ledit élément électro-optique et est commandé en conduction par ladite deuxième ligne de commande ; et
ledit second circuit inclut un troisième commutateur connecté entre ledit premier noeud et ladite source de tension et est commandé en conduction par ladite troisième ligne de commande.

12. Circuit de pixel selon la revendication 11, dans lequel, lorsque ledit élément électro-optique est excité,
en tant que premier stade, ledit premier commutateur est maintenu dans un état non conducteur par ladite première ligne de commande, ledit deuxième commutateur est maintenu dans un état non conducteur par ladite deuxième ligne de commande, et ledit troisième commutateur est maintenu dans un état non conducteur par ladite troisième ligne de commande ;
en tant que deuxième stade, ledit premier commutateur est maintenu dans un état conducteur par ladite première ligne de commande, ledit troisième commutateur est maintenu dans un état conducteur par ladite troisième ligne

de commande, ledit premier noeud est maintenu à un potentiel prédéterminé, et, dans cet état, des données destinées à être propagées sur ladite ligne de données sont écrites dans ledit élément à capacité électrique de pixel, puis ledit premier commutateur est maintenu dans un état non conducteur par ladite première ligne de commande ; et en tant que troisième stade, ledit troisième commutateur est maintenu dans un état non conducteur par ladite troisième ligne de commande et ledit deuxième commutateur est maintenu dans un état conducteur par ladite deuxième ligne de commande.

13. Circuit de pixel selon la revendication 1, comprenant en outre un second circuit faisant en sorte que ledit second noeud soit maintenu à un potentiel fixe lorsque ledit premier commutateur est maintenu dans un état conducteur et écrit des données propagées à travers la ligne de données.

14. Circuit de pixel selon la revendication 13, dans lequel ledit potentiel fixe est ledit premier potentiel de référence ou second potentiel de référence.

15. Circuit de pixel selon la revendication 13, dans lequel :

ledit circuit comprend en outre des deuxième, troisième, et quatrième lignes de commande ;
ledit transistor d'excitation est un transistor à effet de champ avec une source connectée audit premier noeud ;
ledit premier circuit inclut un deuxième commutateur connecté entre ledit premier noeud et ledit élément électro-optique et est commandé en conduction par ladite deuxième ligne de commande et un troisième commutateur connecté entre une source dudit transistor à effet de champ et ledit premier noeud et est commandé en conduction par ladite troisième ligne de commande ; et
ledit second circuit inclut un quatrième commutateur connecté entre ledit premier noeud et ledit potentiel fixe et est commandé en conduction par ladite quatrième ligne de commande.

16. Circuit de pixel selon la revendication 15, dans lequel, lorsque ledit élément électro-optique est excité,
en tant que premier stade, ledit premier commutateur est maintenu dans un état non conducteur par ladite première ligne de commande, ledit deuxième commutateur est maintenu dans un état non conducteur par ladite deuxième ligne de commande, ledit troisième commutateur est maintenu dans un état non conducteur par ladite troisième ligne de commande, et ledit quatrième commutateur est maintenu dans un état non conducteur par ladite quatrième ligne de commande ;
en tant que deuxième stade, ledit premier commutateur est maintenu dans un état conducteur par ladite première ligne de commande, ledit quatrième commutateur est maintenu dans un état conducteur par ladite quatrième ligne de commande, ledit second noeud est maintenu à un potentiel fixe, et, dans cet état, des données destinées à être propagées sur ladite ligne de données sont écrites dans ledit élément à capacité électrique de pixel, puis ledit premier commutateur est maintenu dans un état non conducteur par ladite première ligne de commande, et ledit quatrième commutateur est maintenu dans un état non conducteur par ladite quatrième ligne de commande ; et
en tant que troisième stade, ledit deuxième commutateur est maintenu dans un état conducteur par ladite deuxième ligne de commande et ledit troisième commutateur est maintenu dans un état conducteur par ladite troisième ligne de commande.

17. Dispositif d'affichage, comprenant :

une pluralité de circuits de pixel agencés en une matrice ;
une ligne de données agencée pour chaque colonne dudit réseau matriciel de circuits de pixel et à travers laquelle un signal de données conformément à des informations de luminance est fourni ;
une première ligne de commande agencée pour chaque rangée dudit réseau matriciel de circuits de pixel ; et des premier et second potentiels de référence ;
chaque dit circuit de pixel selon la revendication 1.

18. Dispositif d'affichage selon la revendication 17, comprenant en outre un second circuit pour faire en sorte que ledit premier noeud soit maintenu à un potentiel prédéterminé lorsque ledit premier commutateur est maintenu dans l'état conducteur et écrit des données destinées à être propagées à travers la ligne de données.

19. Dispositif d'affichage selon la revendication 17, comprenant en outre un second circuit pour faire en sorte que ledit second noeud soit maintenu à un potentiel fixe lorsque ledit premier commutateur est maintenu dans l'état conducteur et écrit des données destinées à être propagées à travers la ligne de données.

20. Procédé d'excitation d'un circuit de pixel, possédant :

un élément électro-optique avec une luminance changeant selon un courant passant,
une ligne de données à travers laquelle un signal de données conformément à des informations de luminance est fourni ;
des premier et second noeuds ;
des premier et second potentiels de référence ;
un transistor à effet de champ avec un drain connecté audit premier potentiel de référence ou second potentiel de référence, une source connectée audit premier noeud, et une grille connectée audit second noeud, ledit transistor à effet de champ formant une ligne d'alimentation en courant entre une première borne et une seconde borne et commandant un courant passant à travers ladite ligne d'alimentation en courant conformément au potentiel d'une borne de commande connectée audit second noeud ;
un élément à capacité électrique de pixel connecté entre ledit premier noeud et ledit second noeud ;
un premier commutateur connecté entre ladite ligne de données et l'une ou l'autre d'une première borne ou d'une seconde borne dudit élément à capacité électrique de pixel ; et
un premier circuit pour faire en sorte qu'un potentiel dudit premier noeud passe à un potentiel fixe ;
ladite ligne d'alimentation en courant du transistor d'excitation, ledit premier noeud, et ledit élément électro-optique étant connectés en série entre lesdits premier potentiel de référence et second potentiel de référence, ledit procédé d'excitation d'un circuit de pixel comprenant les étapes suivantes :

le passage forcé d'un potentiel dudit premier noeud à un potentiel fixe par ledit premier circuit dans l'état avec ledit premier commutateur maintenu à un état non conducteur,
le maintien dudit premier commutateur dans un état conducteur, l'écriture de données propagées sur ladite ligne de données dans ledit élément à capacité électrique de pixel, puis le maintien dudit premier commutateur dans le non conducteur, et
l'arrêt du fonctionnement pour faire en sorte qu'un potentiel dudit premier noeud dudit premier circuit passe à un potentiel fixe.

FIG. 1

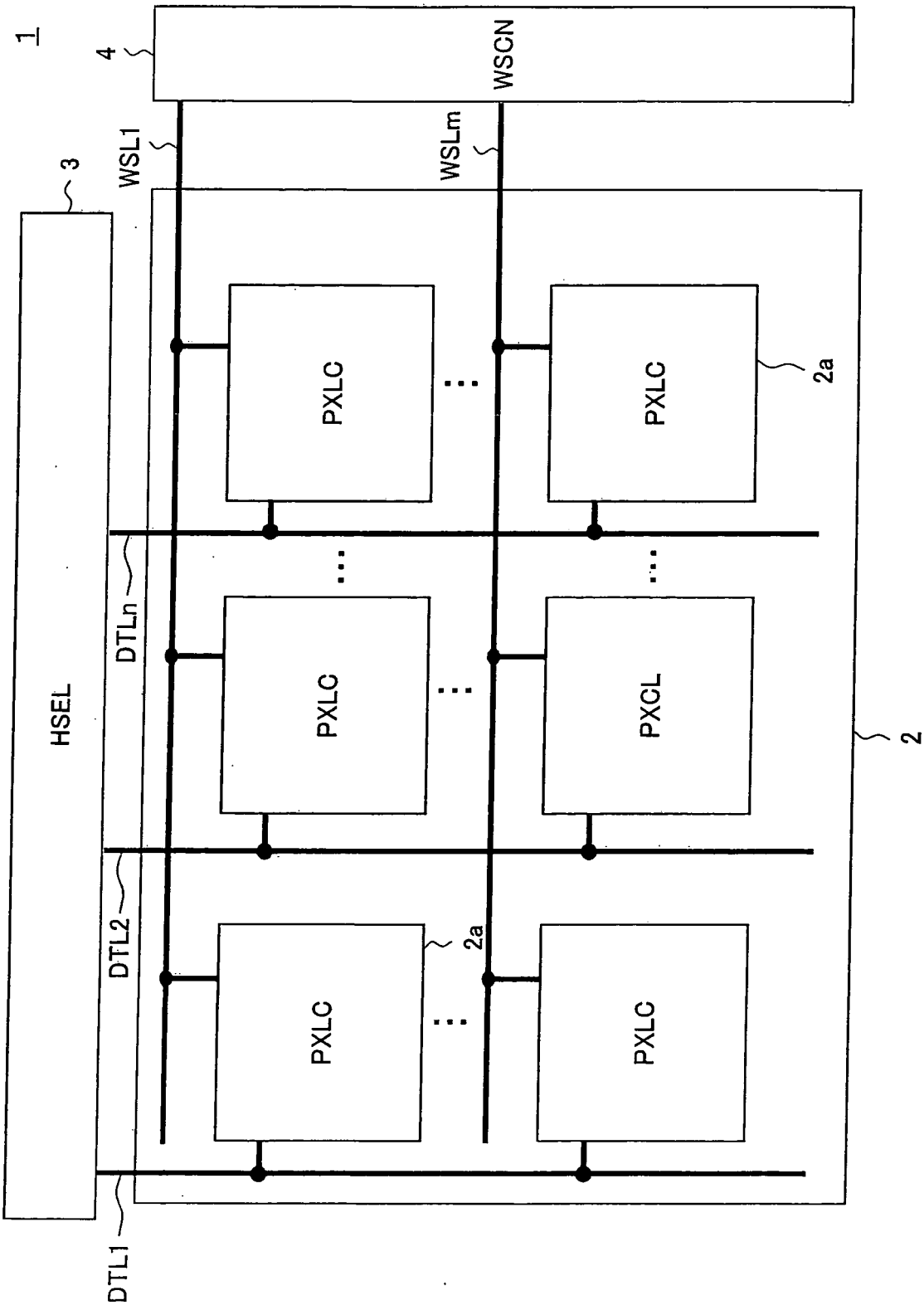
1
4
WSCN
3
WSL1
WSLm
HSEL
PXLC
PXLC
2a
DTLn
PXLC
PXCL
2
DTL2
2a
PXLC
PXLC
DTL1

FIG. 2

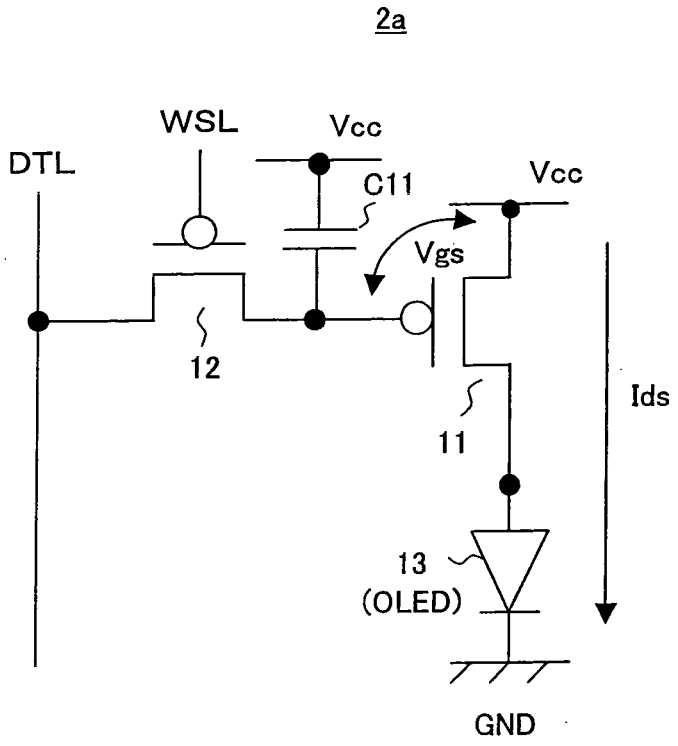

FIG. 3

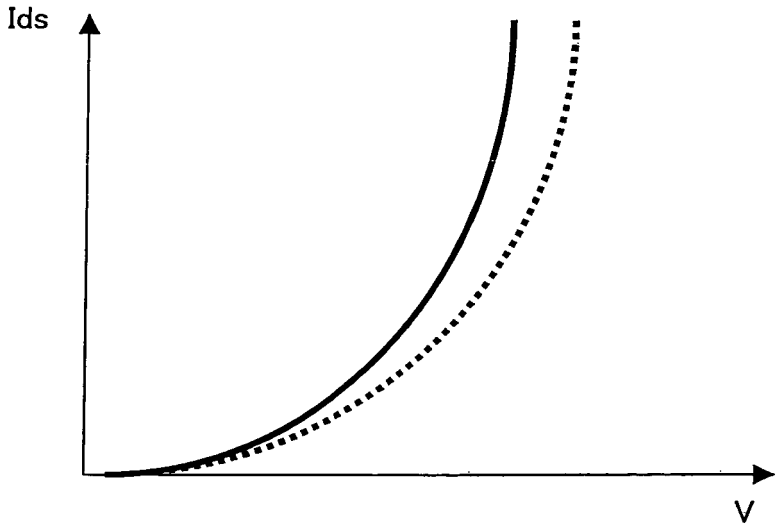

FIG. 4

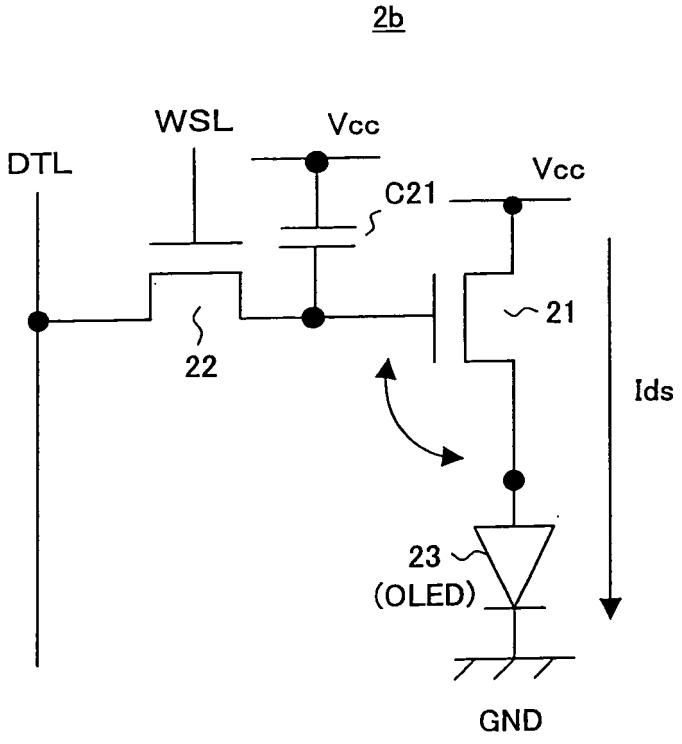

FIG. 5

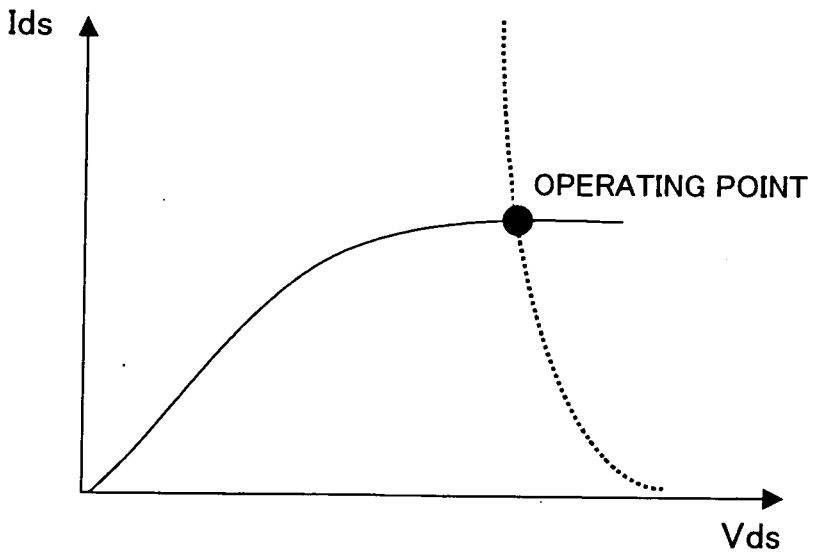

FIG. 6

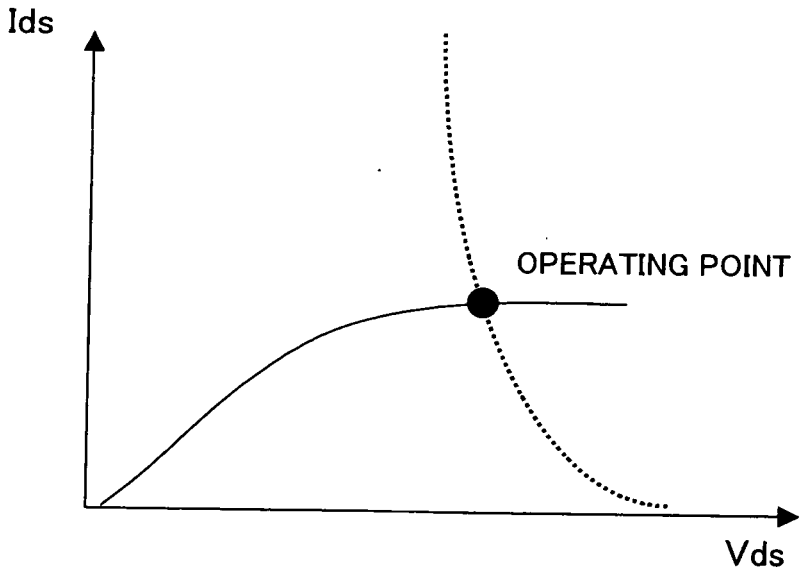

FIG. 7

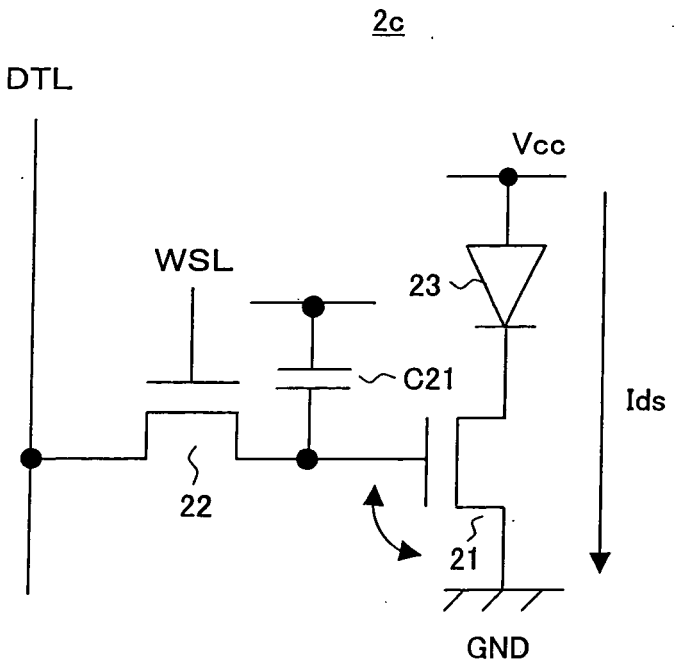

FIG. 8

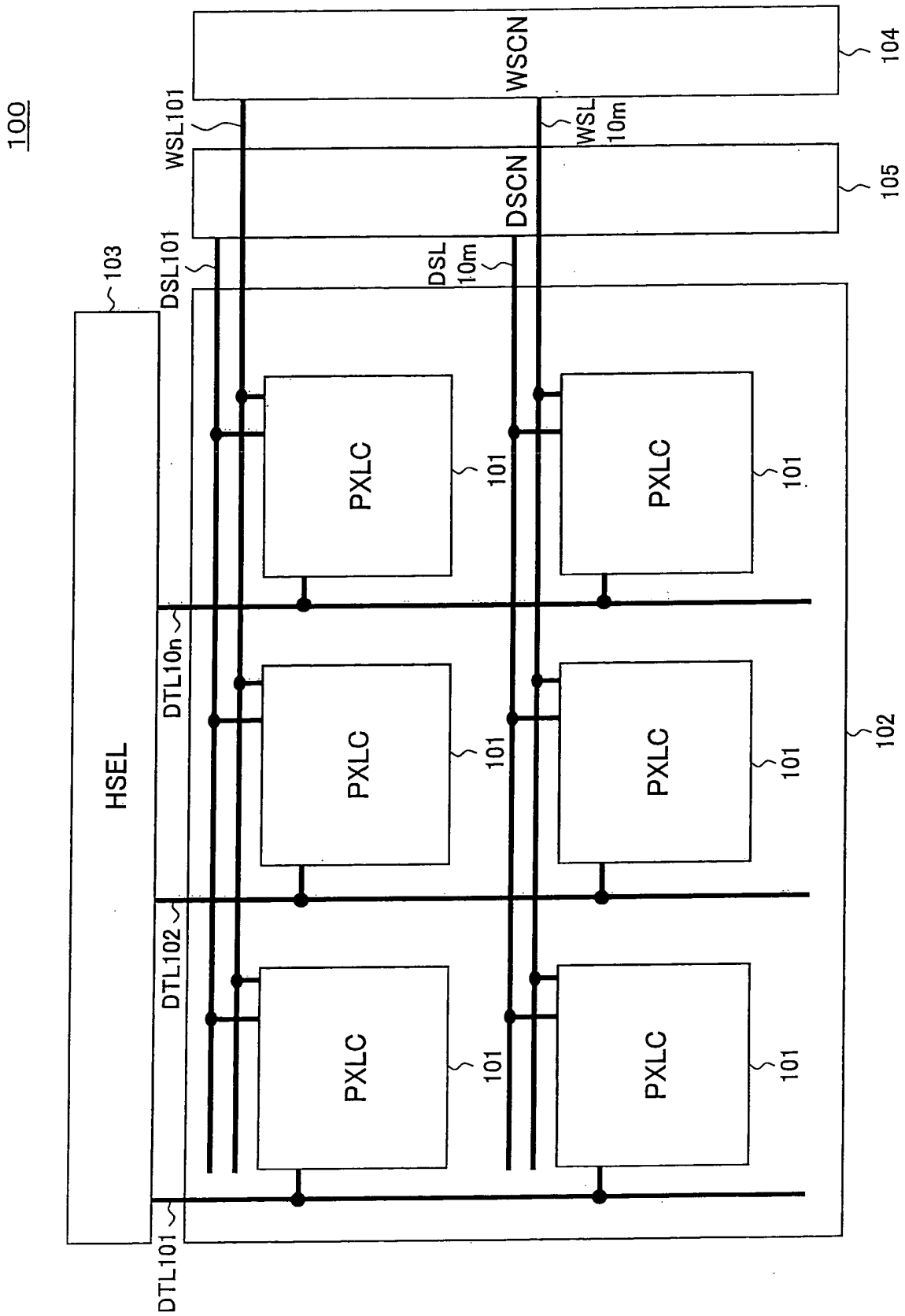
100
HSEL
103
WSL101
DSL101
DTL101
DTL102
DTL10n
WSCN
DSCN
WSL
10m
DSL
10m
104
105
102
PXLC
101

FIG. 9

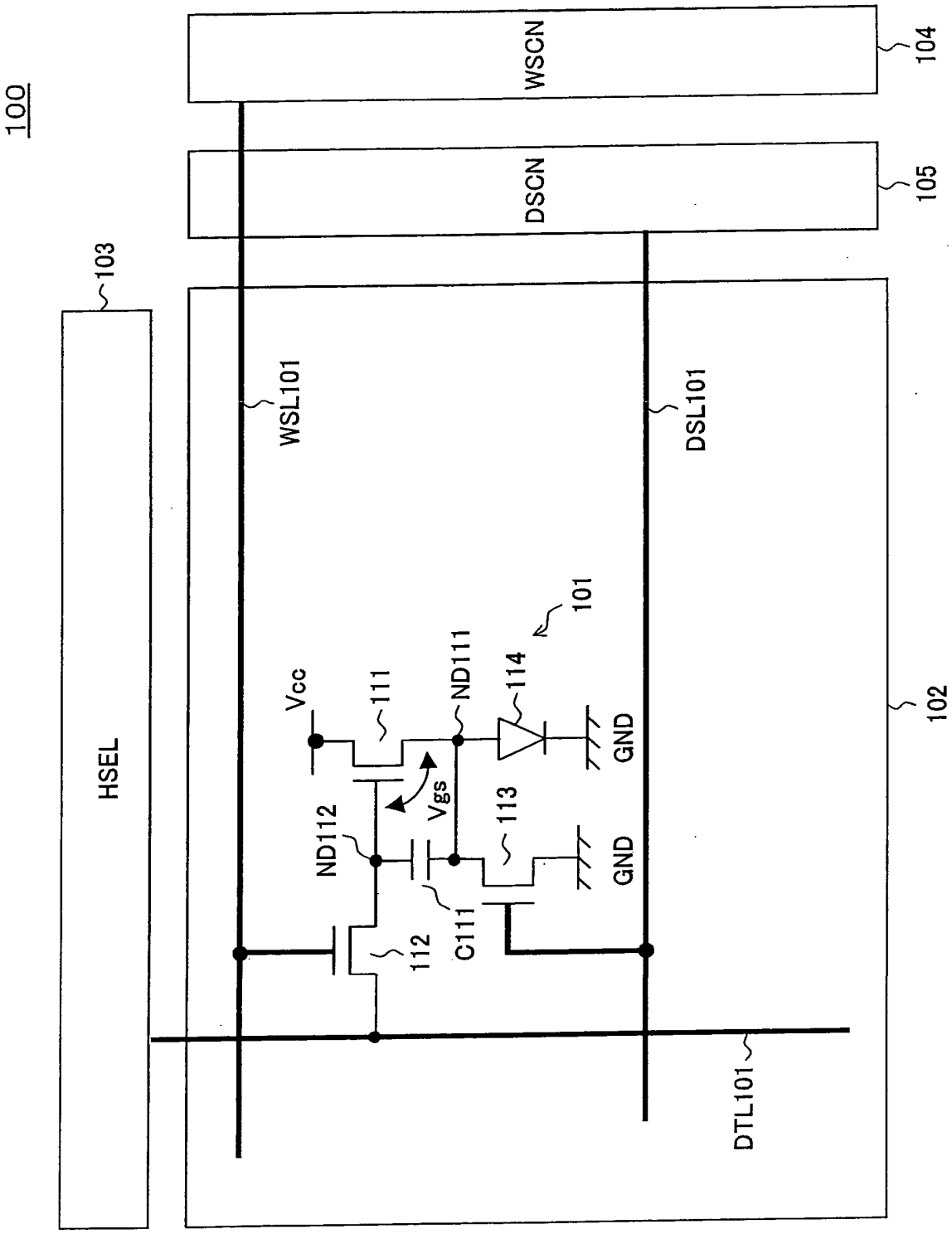
100
HSEL
103
WSCN
104
DSCN
105
WSL101
DSL101
101
Vcc
111
ND111
114
GND
Vgs
ND112
113
GND
C111
112
102
DTL101

FIG. 10A

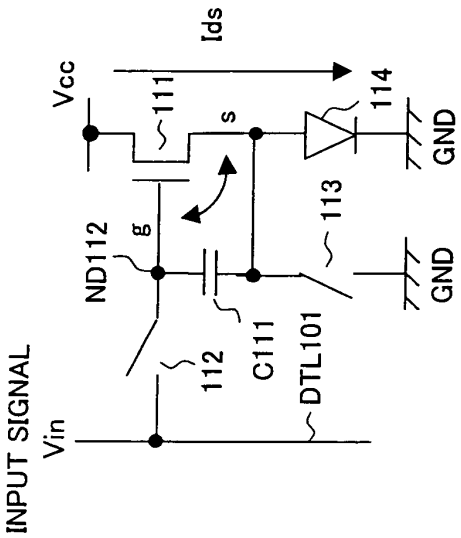

FIG. 10B

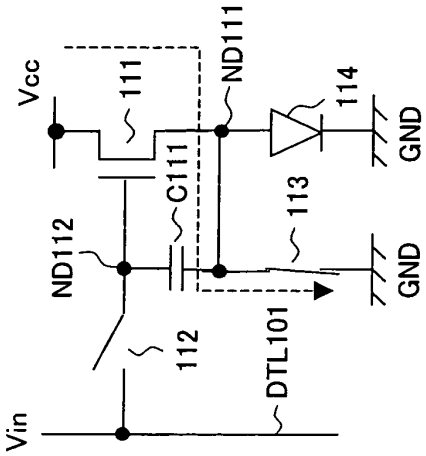

FIG. 10C

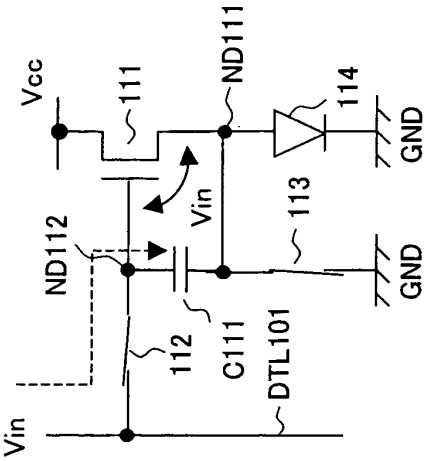

FIG. 10D

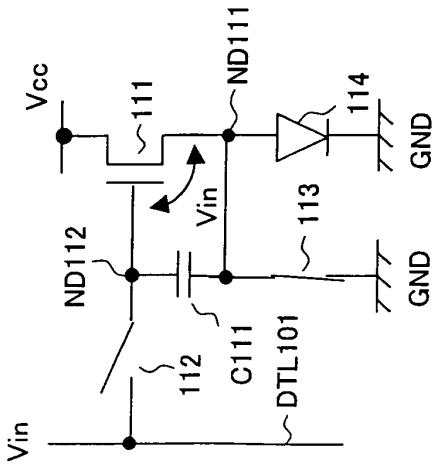

FIG. 10E

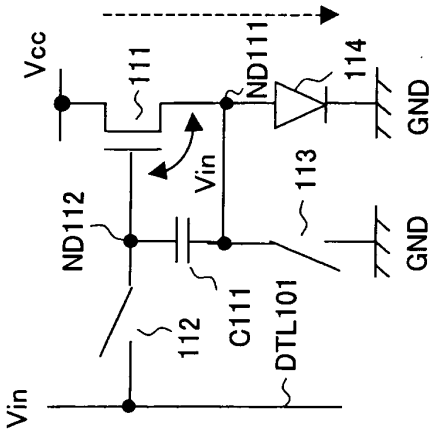

FIG. 10F

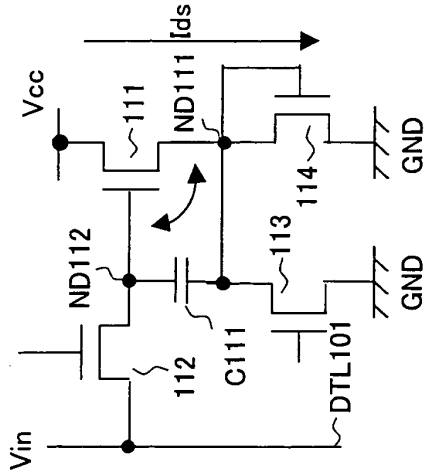

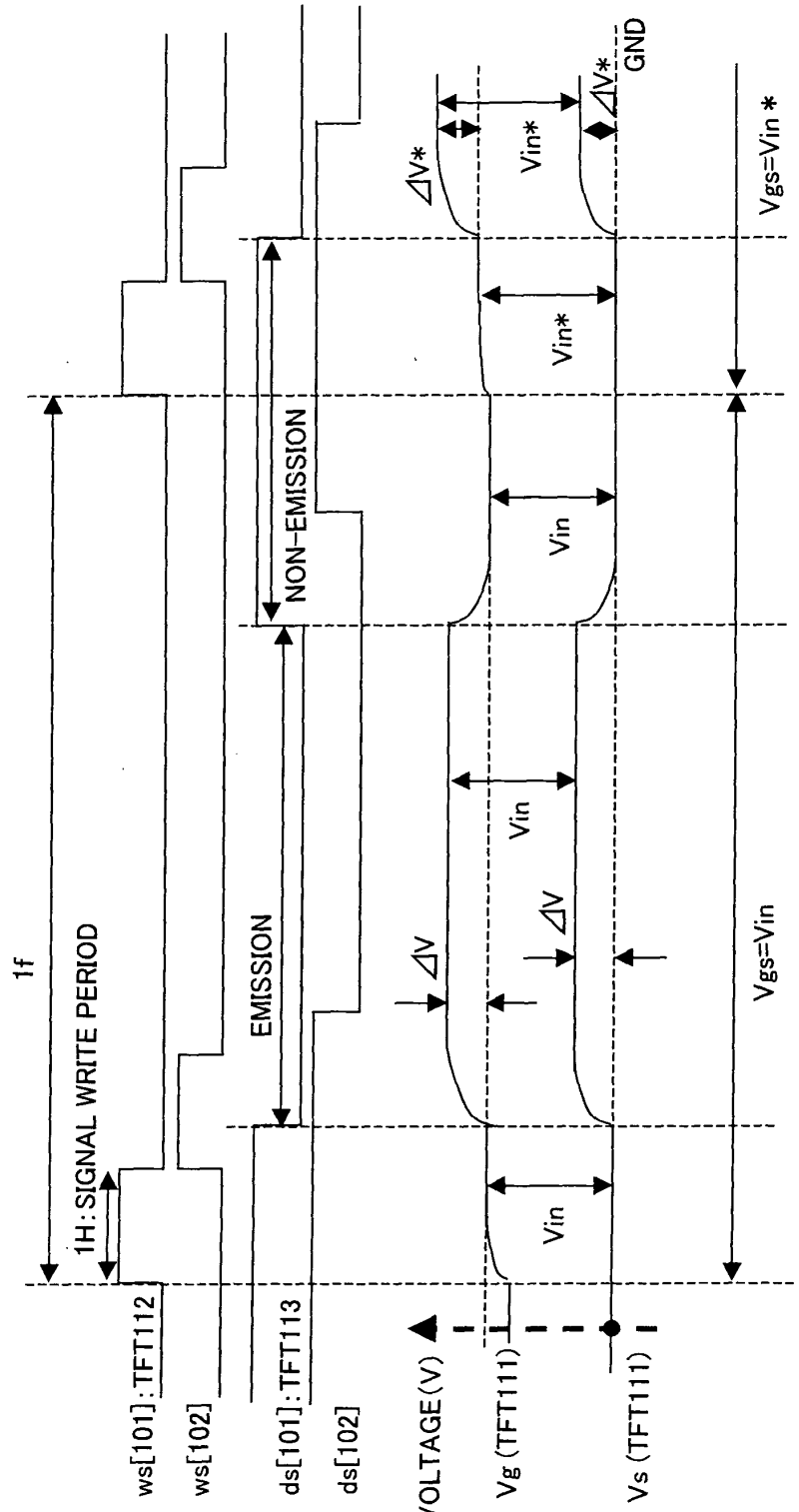

FIG. 11A ws[101]: TFT112
FIG. 11B ws[102]
FIG. 11C ds[101]: TFT113
FIG. 11D ds[102]
FIG. 11E Vg (TFT111)
FIG. 11F Vs (TFT111)

FIG. 12

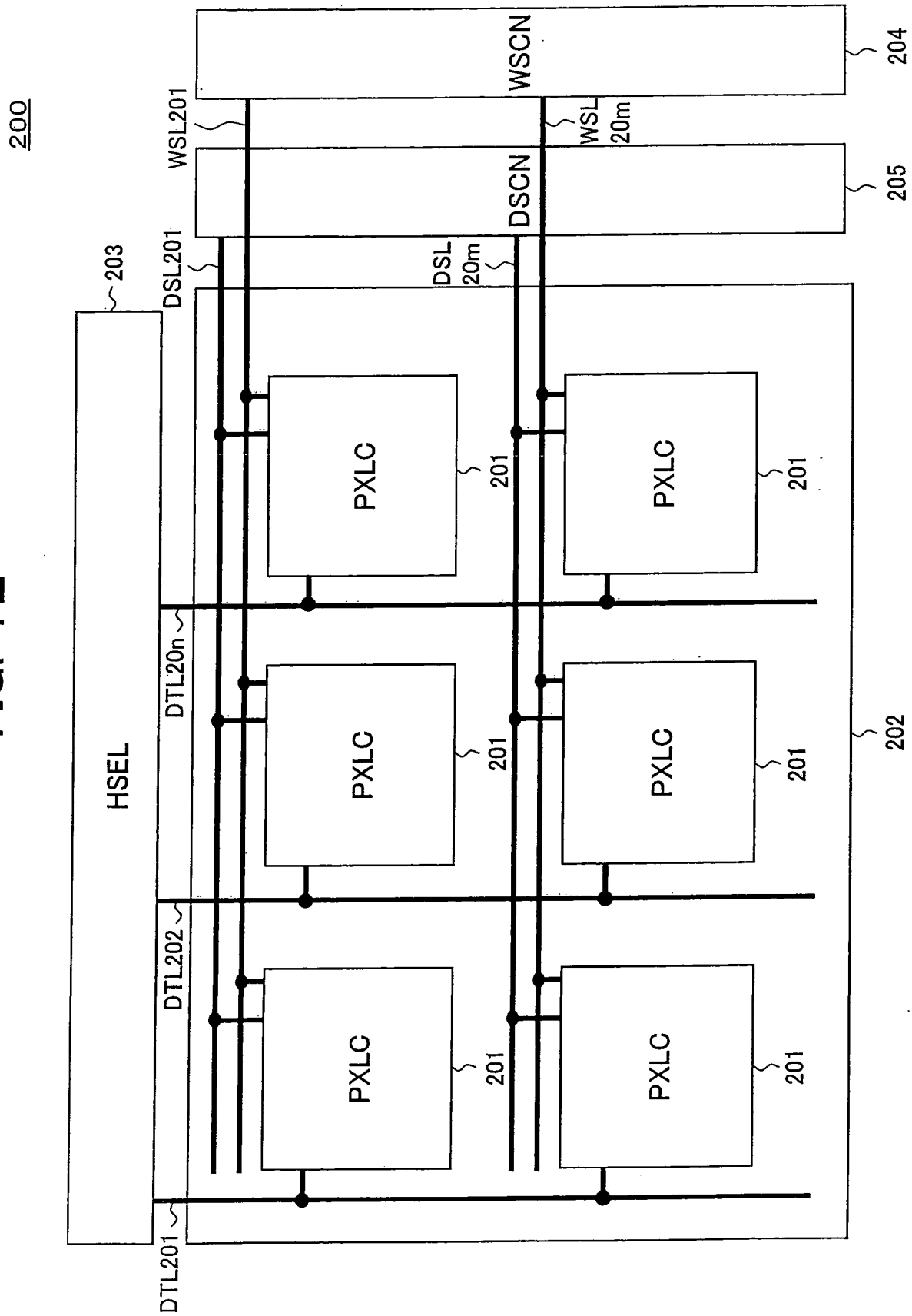
200
203
HSEL
DTL201
DTL202
DTL20n
DSL201
DSL
20m
WSL201
WSL
20m
WSCN
DSCN
204
205
PXLC
201
202

FIG. 13

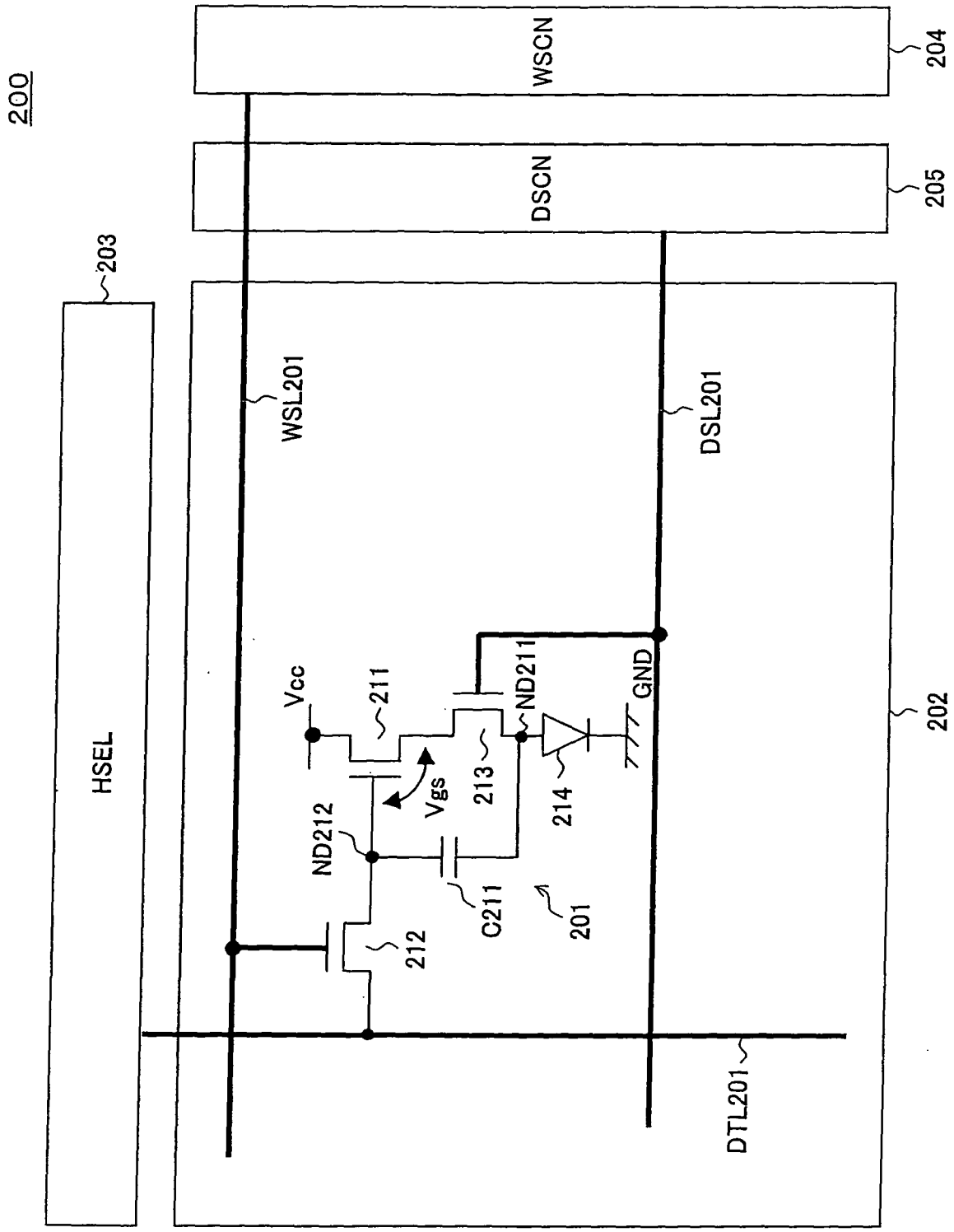
200
203
HSEL
WSCN
204
DSCN
205
WSL201
DSL201
Vcc
211
ND211
GND
202
Vgs
213
214
ND212
C211
201
212
DTL201

FIG. 14A

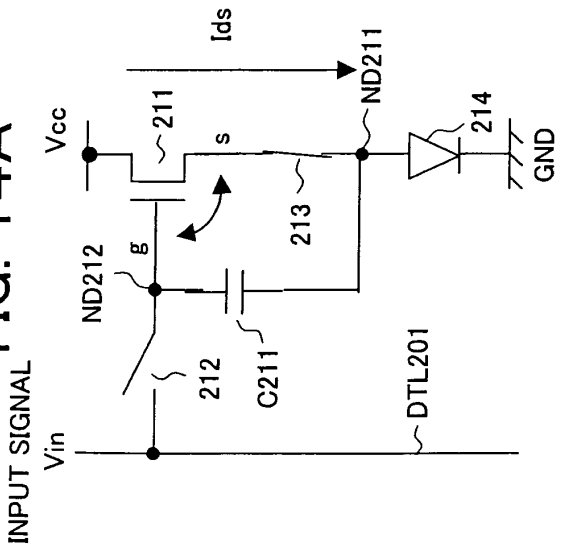

FIG. 14B

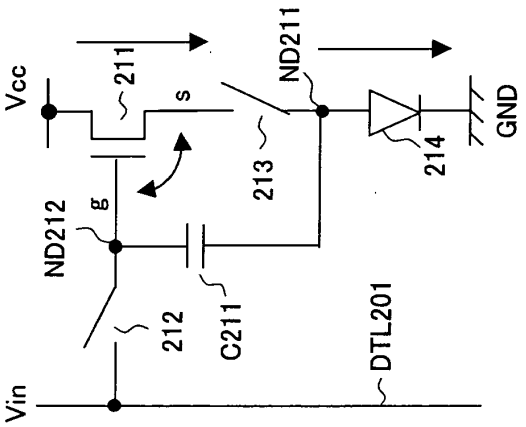

FIG. 14C

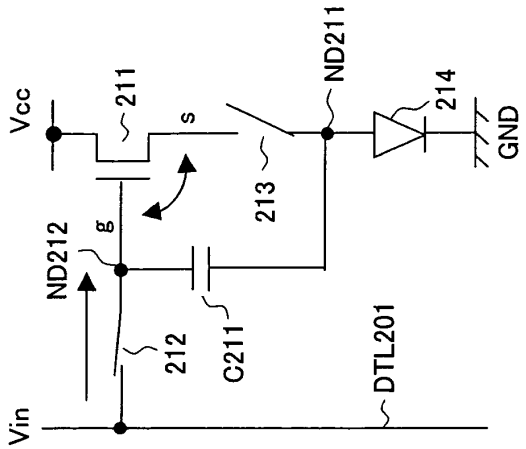

FIG. 14D

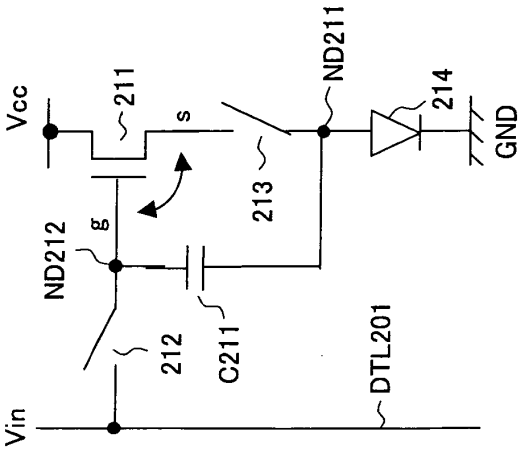

FIG. 14E

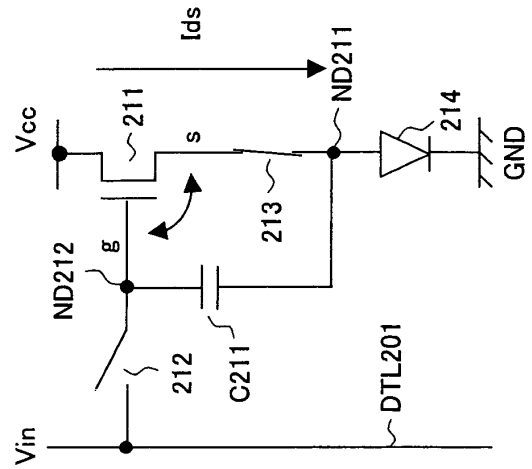

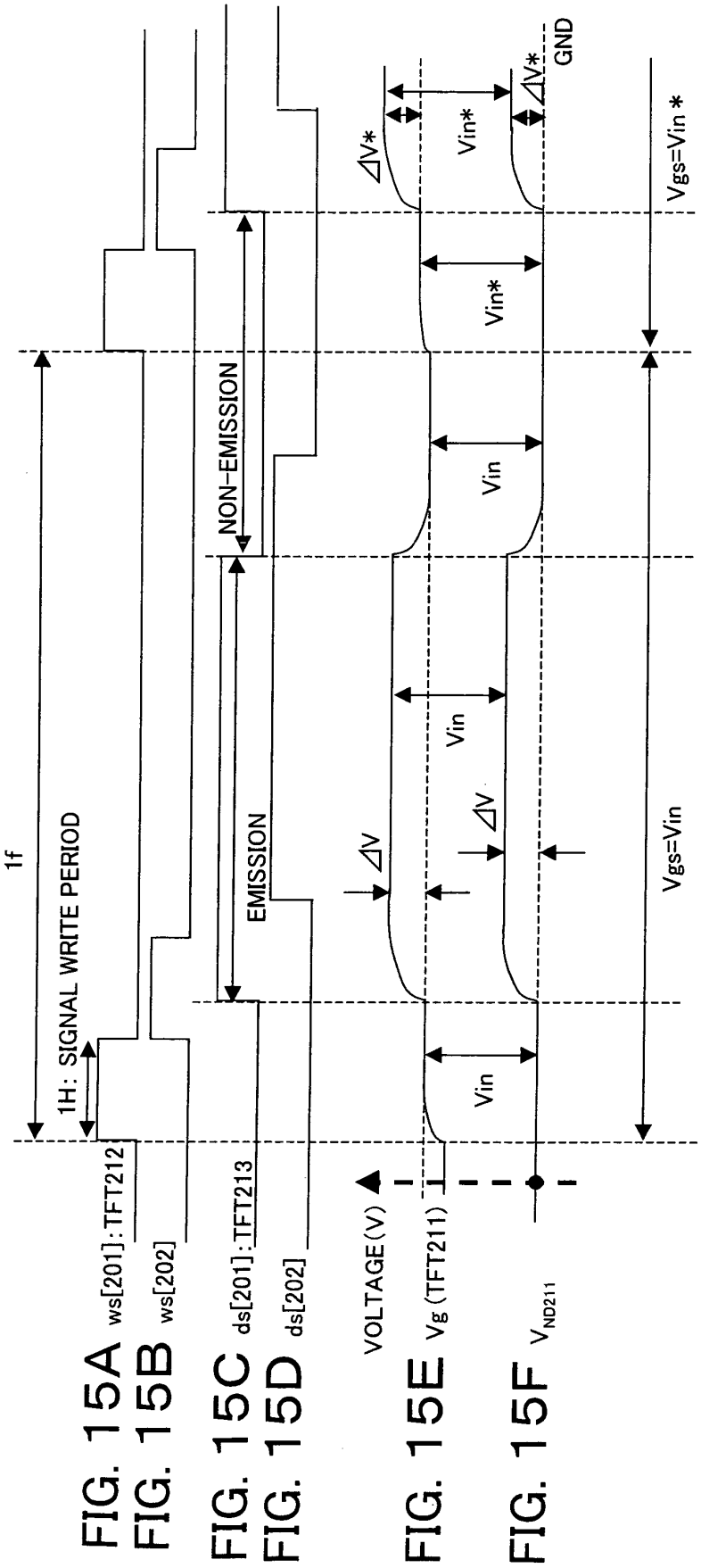
1f
1H: SIGNAL WRITE PERIOD
NON-EMISSION
EMISSION
ΔV
ΔV*
Vin
Vin*
GND
Vgs=Vin
Vgs=Vin *
VOLTAGE (V)
FIG. 15A ws[201]: TFT212
FIG. 15B ws[202]
FIG. 15C ds[201]: TFT213
FIG. 15D ds[202]
FIG. 15E Vg (TFT211)
FIG. 15F VND211

FIG. 16

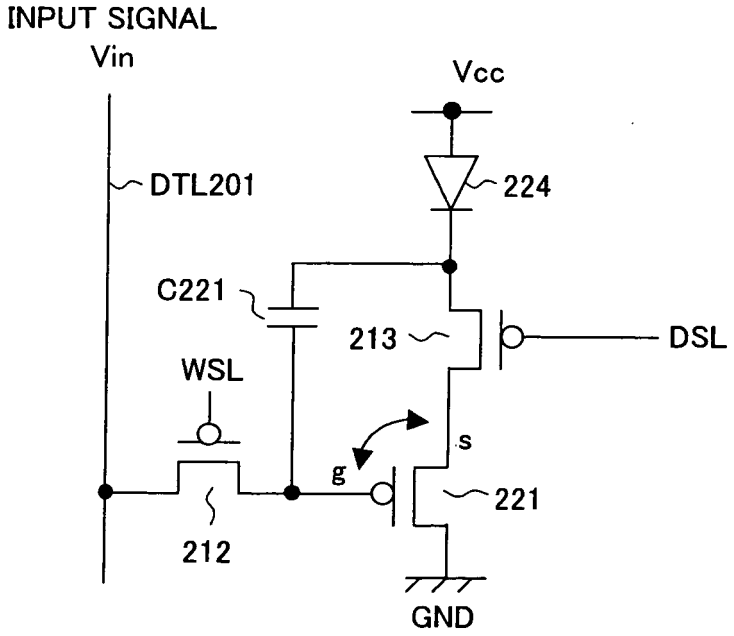
INPUT SIGNAL
Vin
Vcc
DTL201
224
C221
213
DSL
WSL
s
g
221
212
GND

FIG. 17

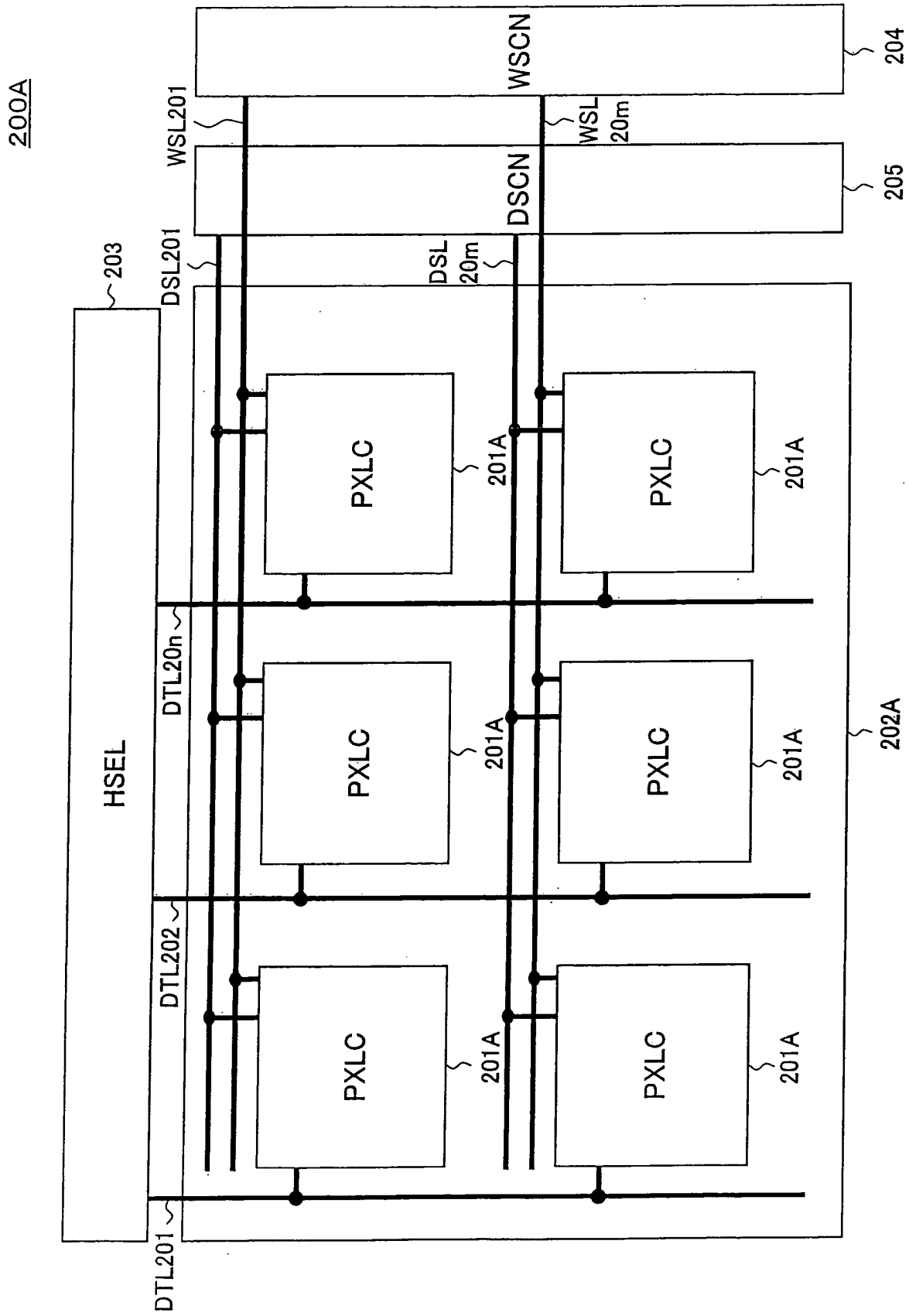
200A
203
HSEL
DTL201
DTL202
DTL20n
DSL201
DSL
20m
WSL201
WSL
20m
WSCN
DSCN
204
205
PXLC
201A
202A

FIG. 18

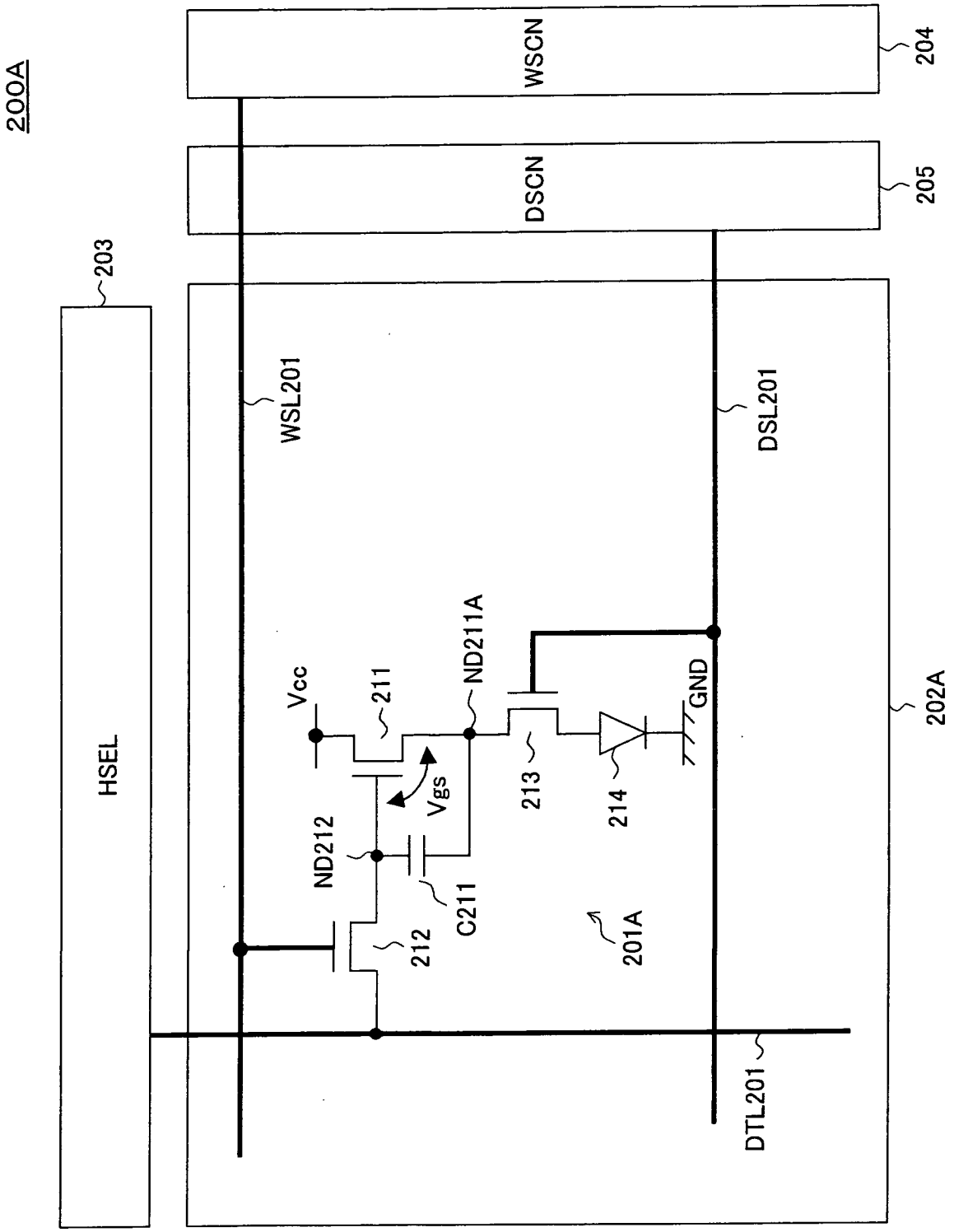
200A
203
HSEL
WSCN
204
DSCN
205
WSL201
DSL201
Vcc
211
ND211A
Vgs
ND212
C211
212
213
214
GND
201A
202A
DTL201

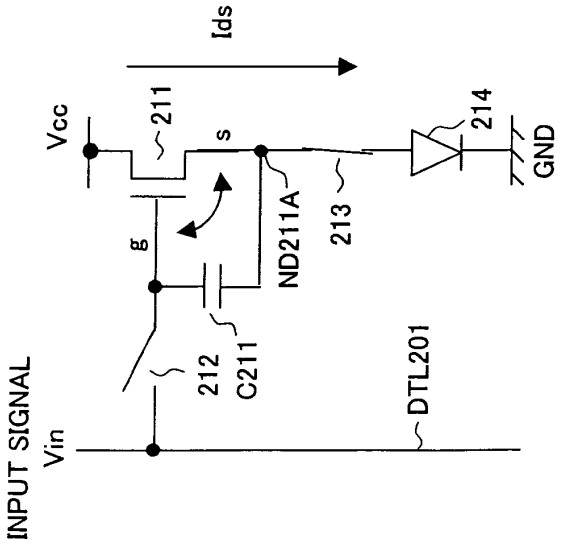

FIG. 19A

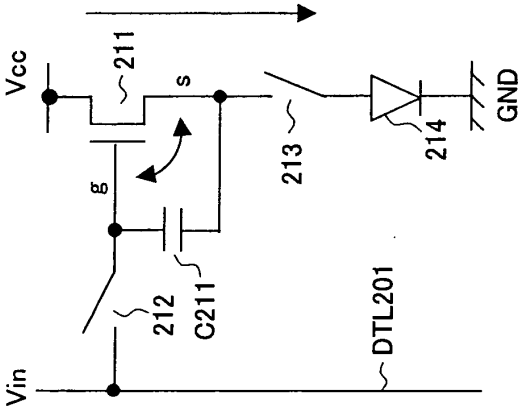

FIG. 19B

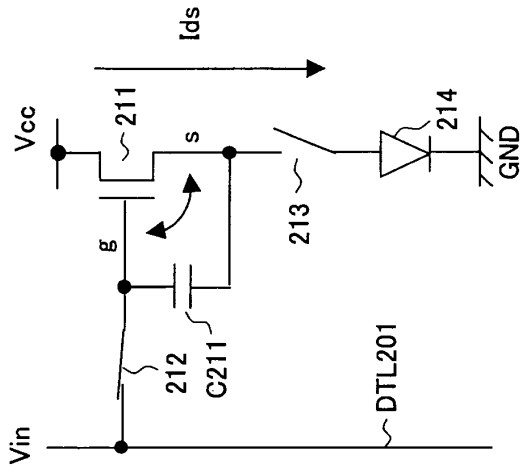

FIG. 19C

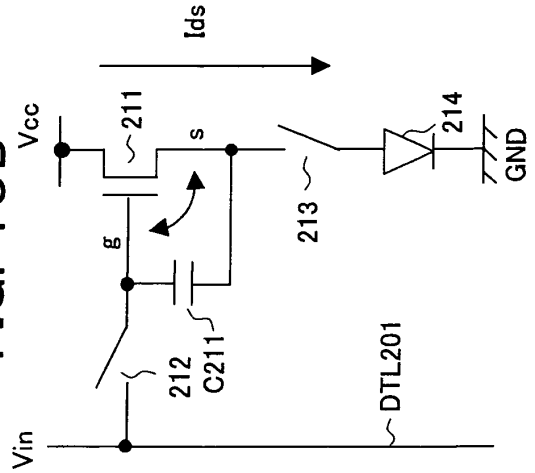

FIG. 19D

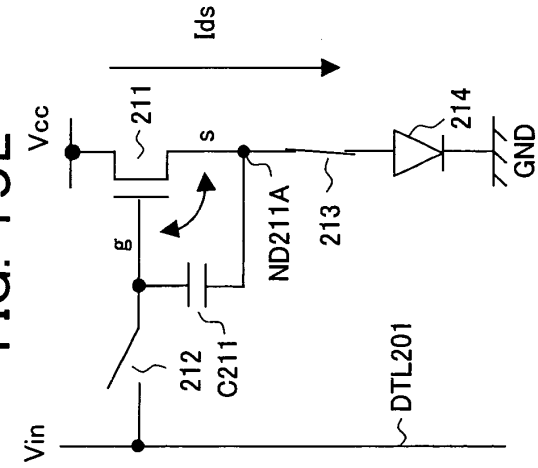

FIG. 19E

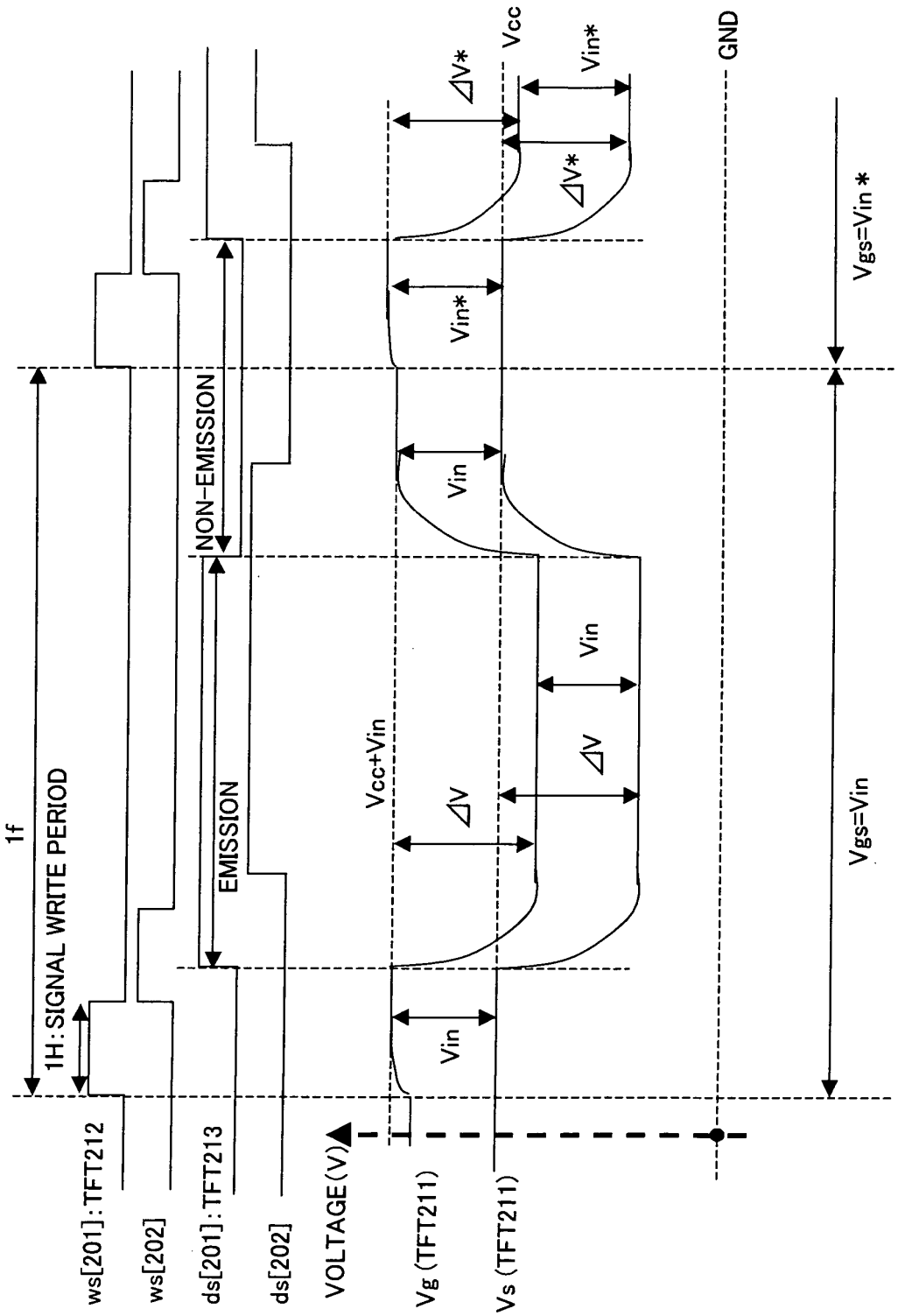

FIG. 20A ws[201]:TFT212
FIG. 20B ws[202]
FIG. 20C ds[201]:TFT213
FIG. 20D ds[202]
FIG. 20E Vg (TFT211)
FIG. 20F Vs (TFT211)

FIG. 21

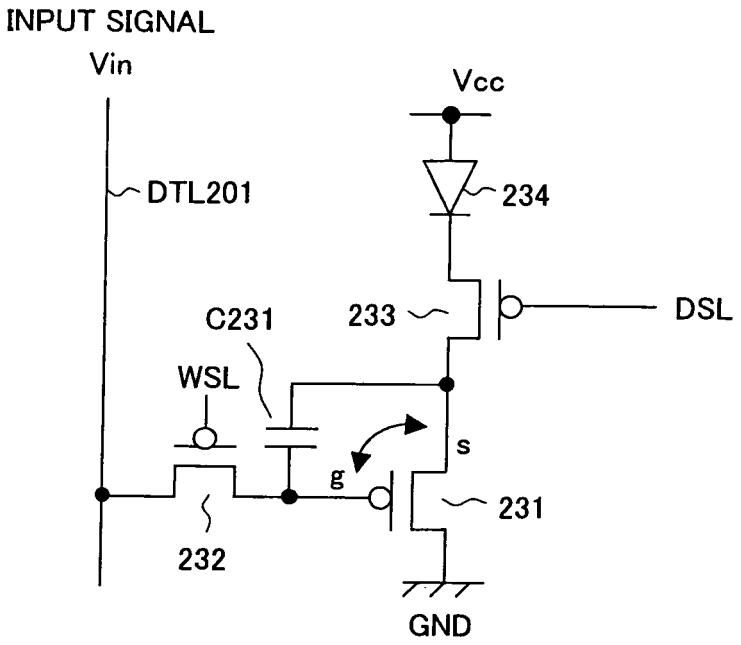
INPUT SIGNAL
Vin
Vcc
DTL201
234
C231
233
DSL
WSL
s
g
231
232
GND

FIG. 22

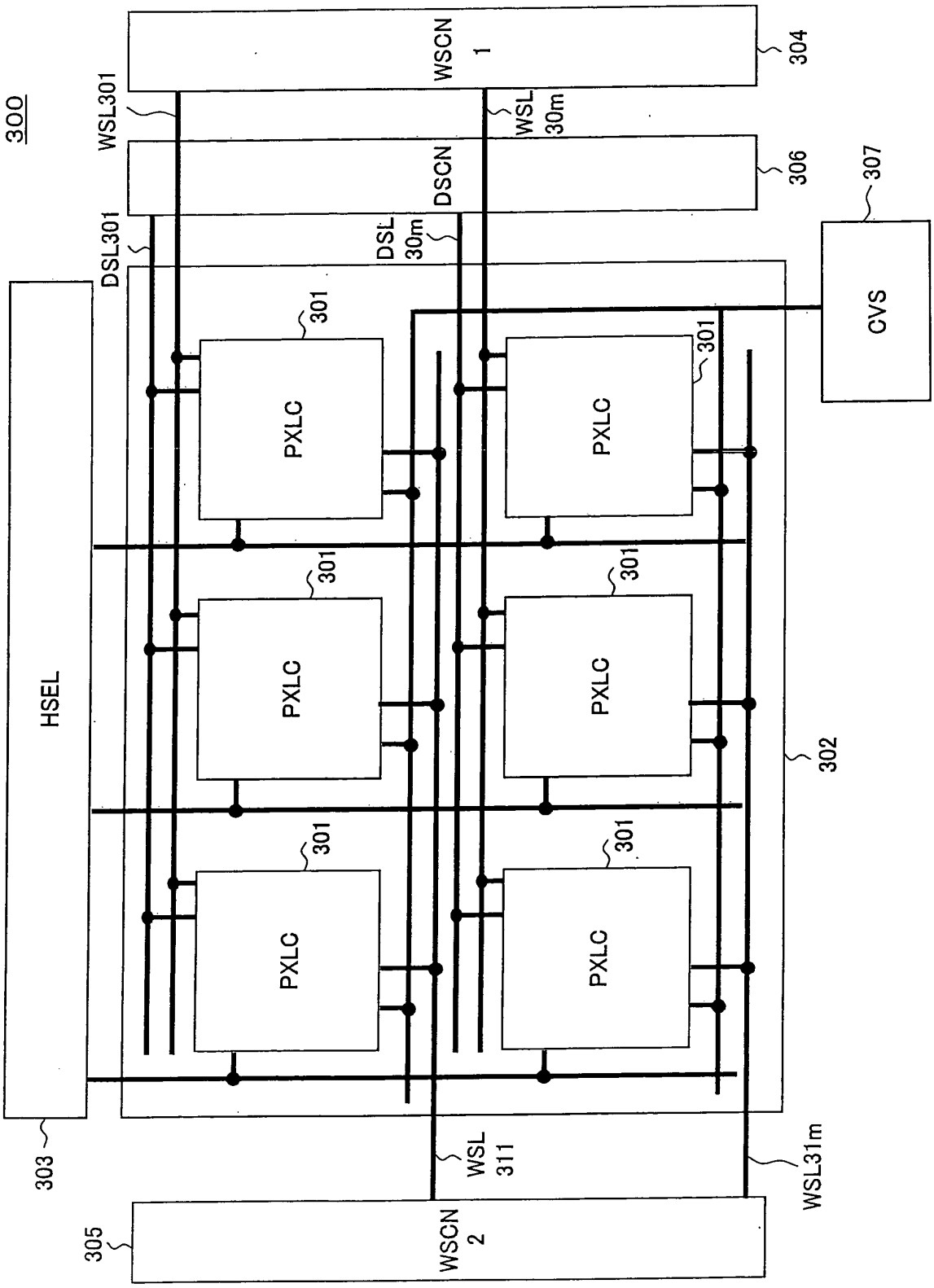
300
WSL301
DSL301
WSCN 1
304
WSL 30m
DSCN
306
DSL 30m
307
CVS
HSEL
303
301
PXLC
302
WSL 311
WSL31m
305
WSCN 2

FIG. 23

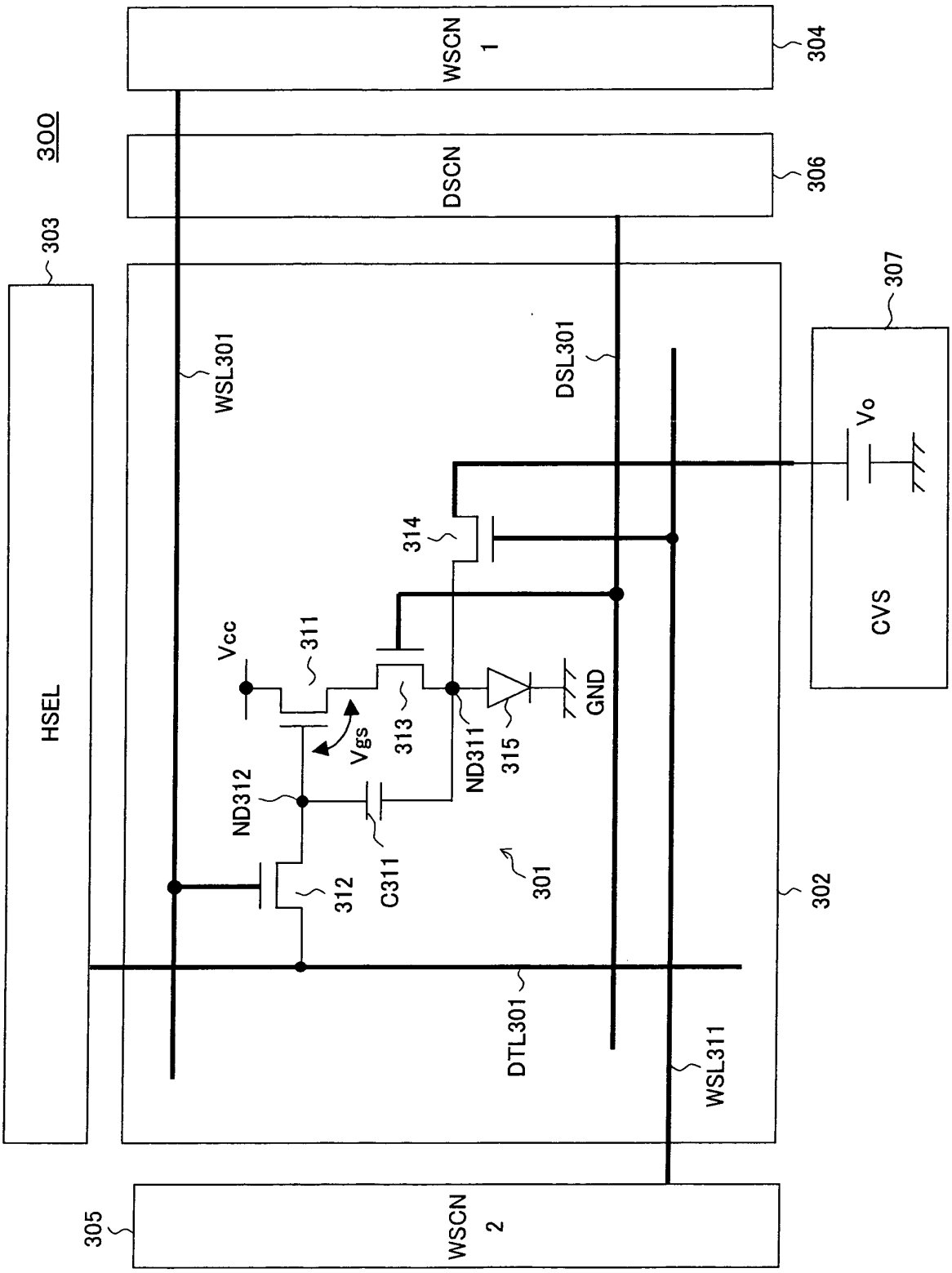
300
303
HSEL
WSCN 1
304
DSCN
306
WSL301
DSL301
307
Vo
CVS
314
Vcc
311
313
Vgs
ND312
ND311
315
GND
C311
312
301
302
DTL301
WSL311
WSCN 2
305

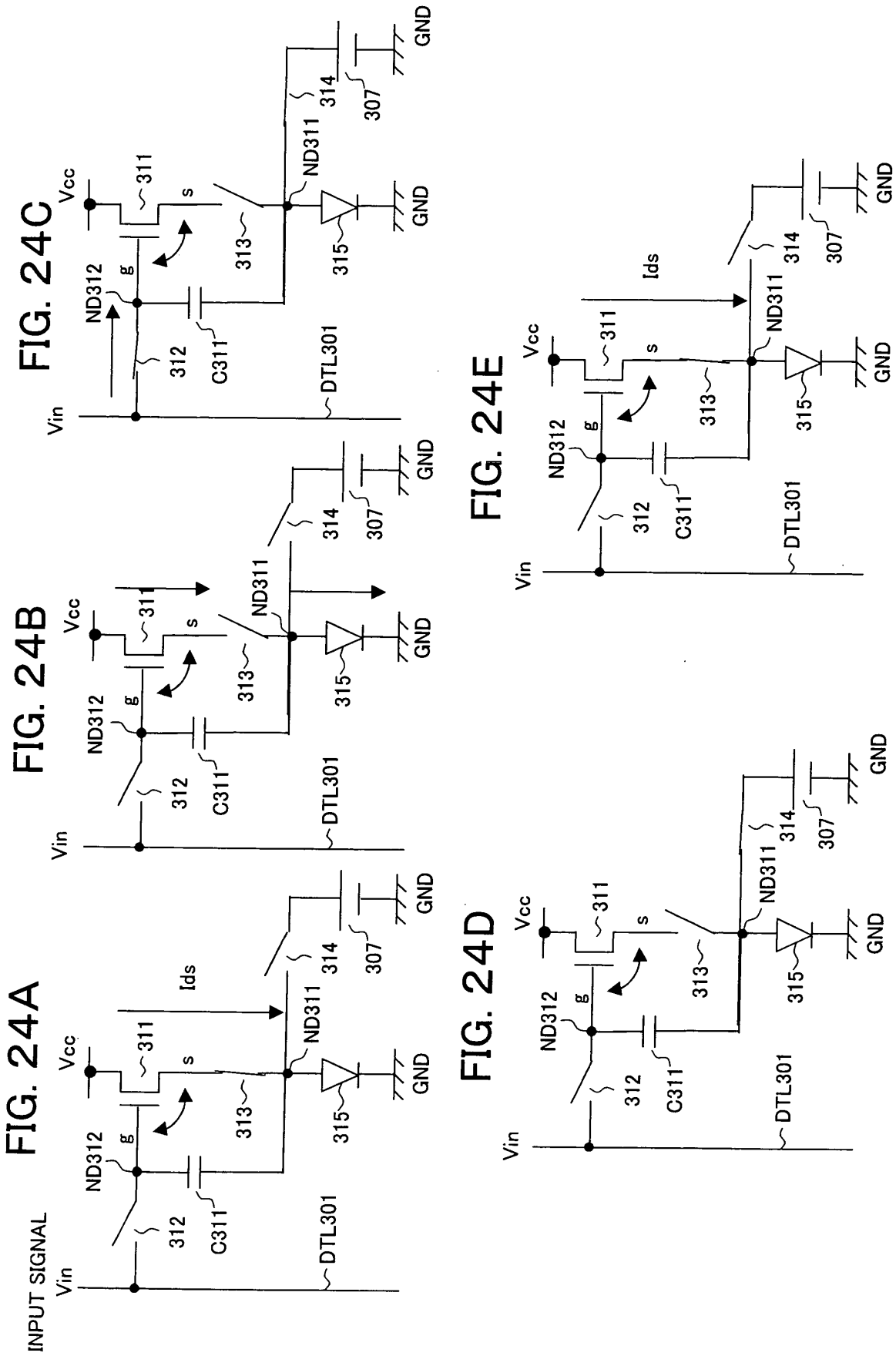

FIG. 24A

FIG. 24B

FIG. 24C

FIG. 24D

FIG. 24E

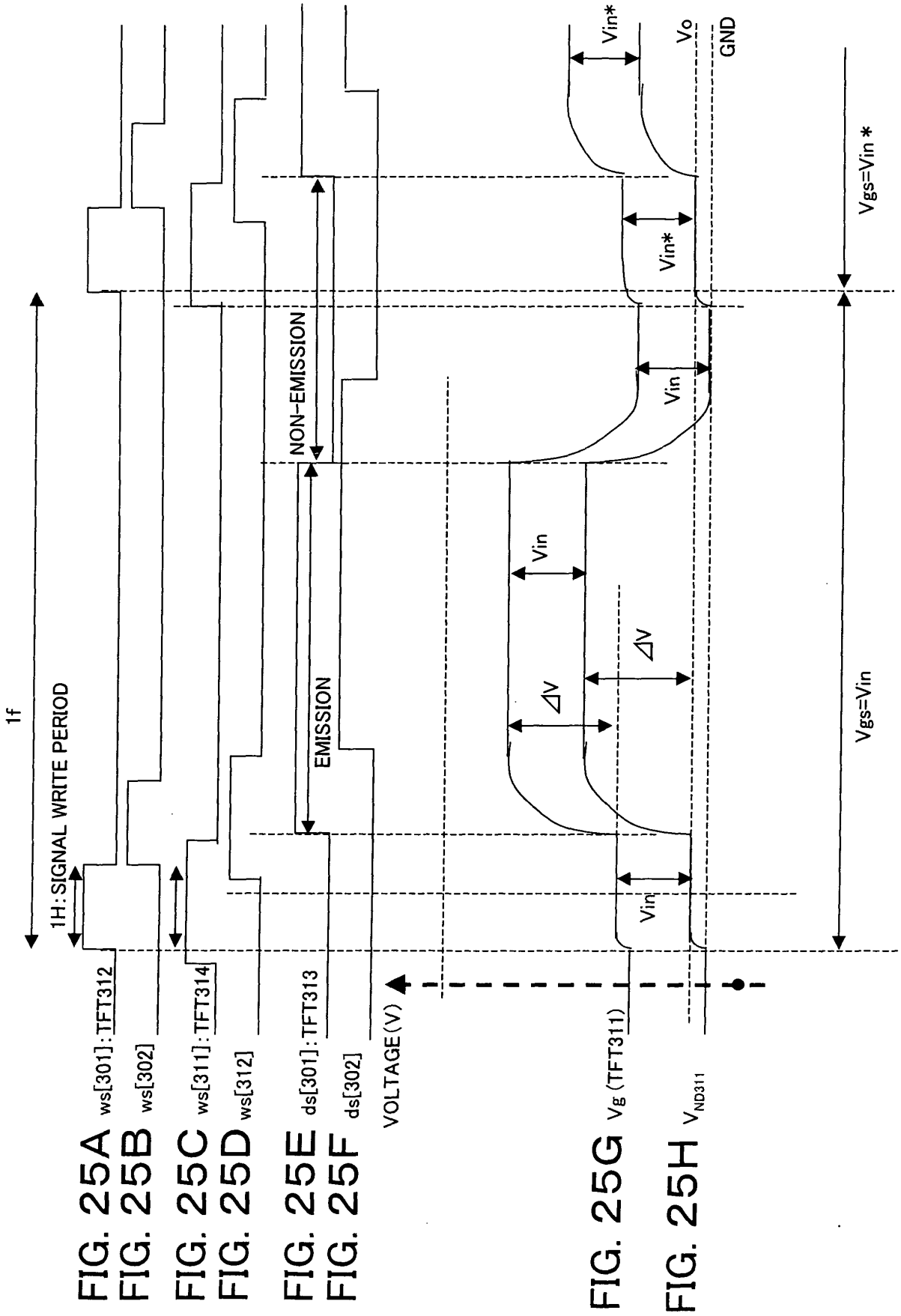
1f
1H: SIGNAL WRITE PERIOD
NON-EMISSION
EMISSION
Vin*
Vo
GND
Vin*
Vin
Vin
ΔV
ΔV
Vin
Vgs=Vin *
Vgs=Vin
FIG. 25A ws[301]: TFT312
FIG. 25B ws[302]
FIG. 25C ws[311]: TFT314
FIG. 25D ws[312]
FIG. 25E ds[301]: TFT313
FIG. 25F ds[302]
VOLTAGE (V)
FIG. 25G Vg (TFT311)
FIG. 25H VND311

FIG. 26

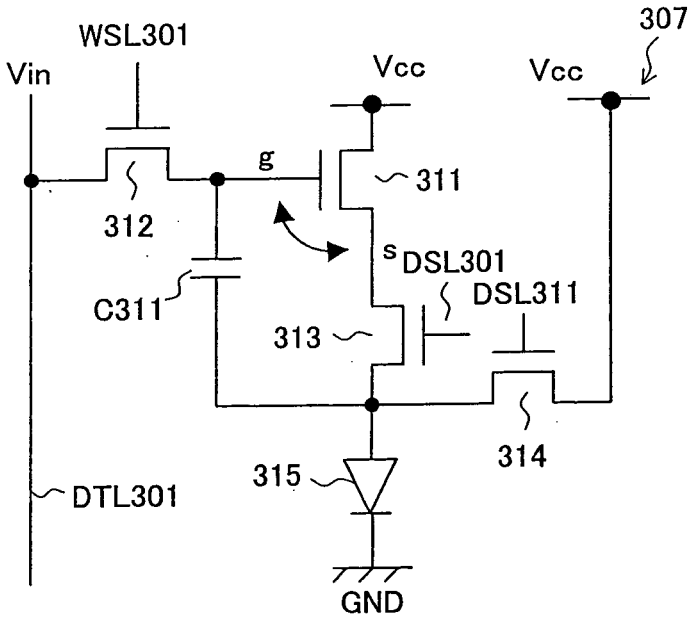
WSL301
Vin
Vcc
Vcc
307
g
311
312
s
DSL301
DSL311
C311
313
314
315
DTL301
GND

FIG. 27

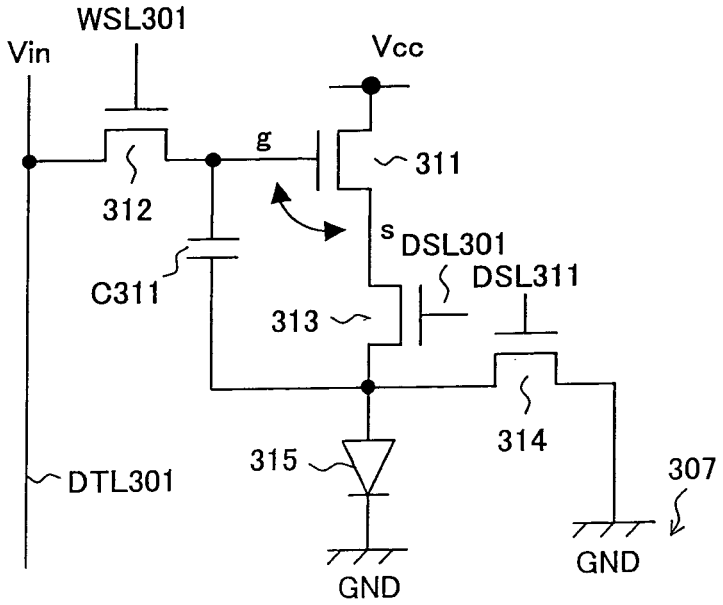
WSL301
Vin
Vcc
g
311
312
s
DSL301
DSL311
C311
313
314
315
307
DTL301
GND
GND

FIG. 28

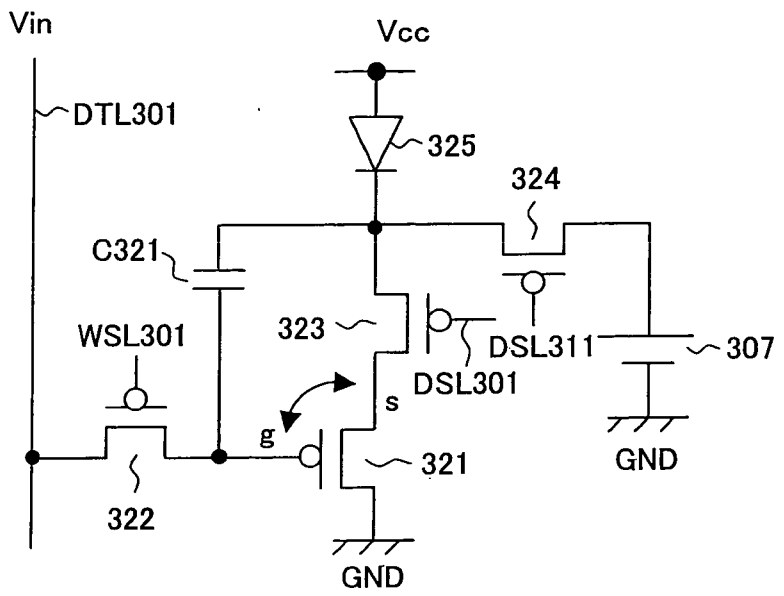
Vin
Vcc
DTL301
325
324
C321
323
DSL311
307
WSL301
DSL301
s
g
321
GND
322
GND

FIG. 29

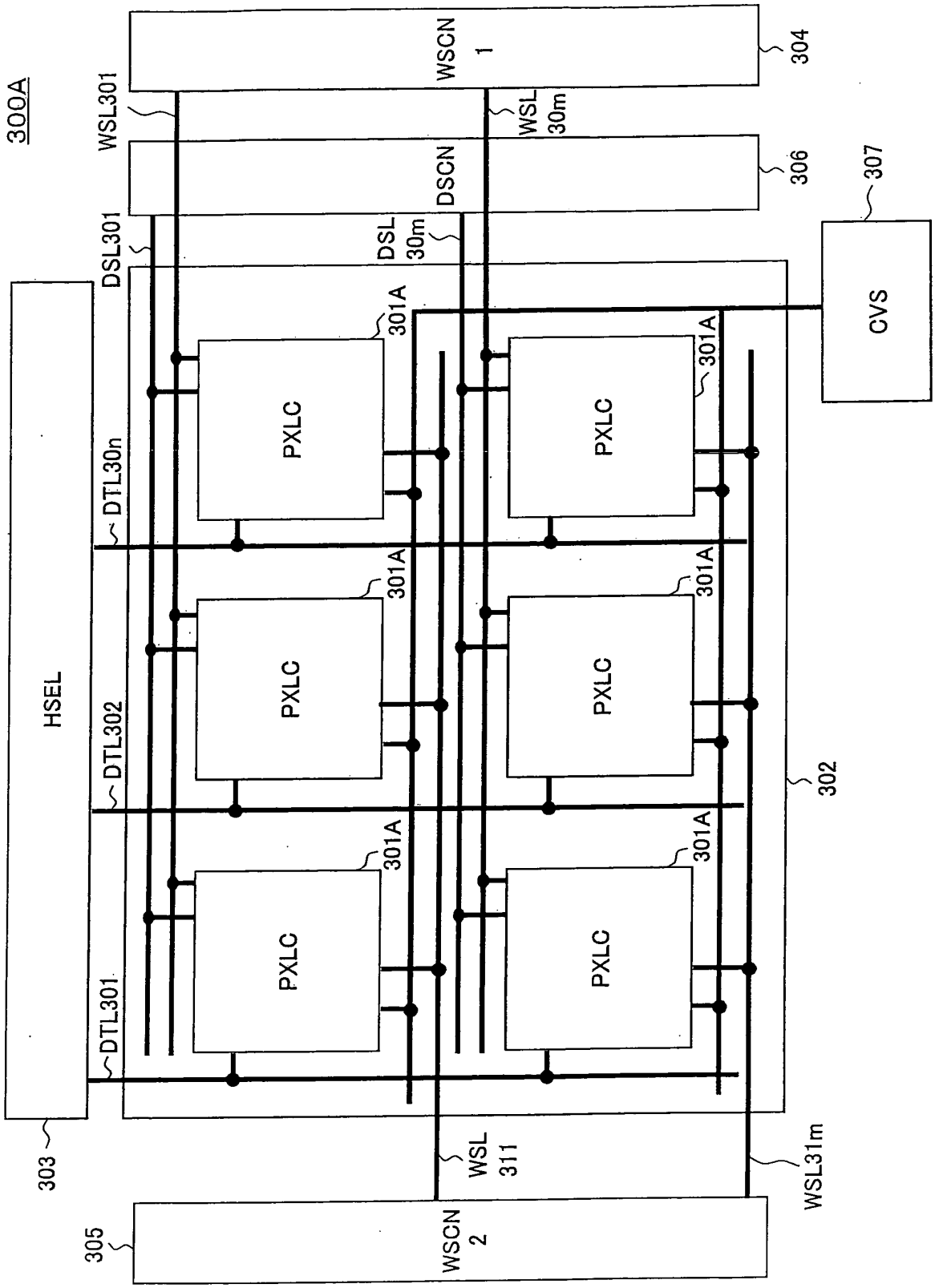
300A
WSL301
DSL301
DTL30n
DTL302
DTL301
HSEL
303
305
WSCN 2
WSL 311
WSL31m
302
PXLC
301A
DSL 30m
DSCN
WSL 30m
WSCN 1
306
304
307
CVS

FIG. 30

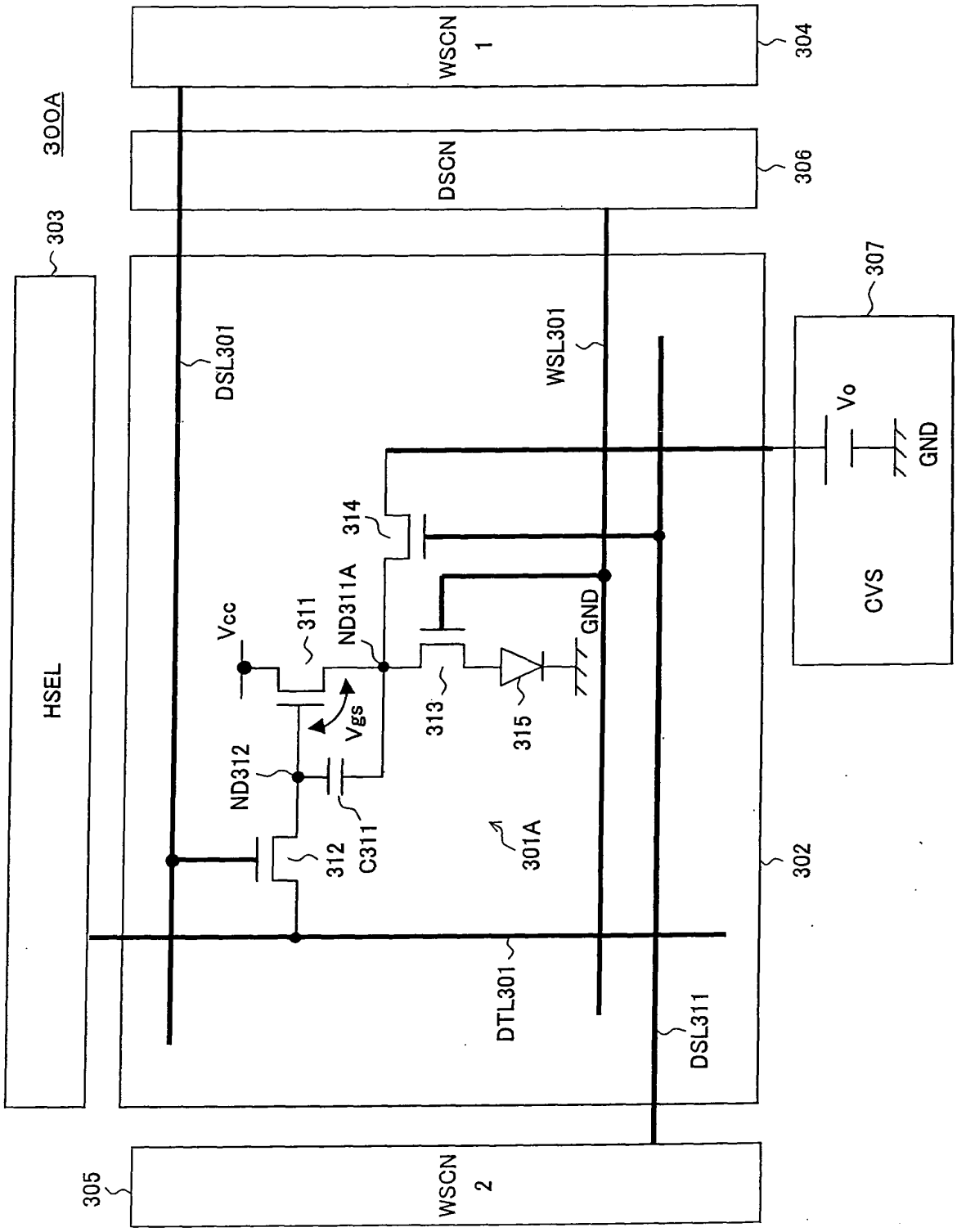
300A
303
HSEL
WSCN 1
304
DSCN
306
DSL301
WSL301
307
Vo
GND
CVS
314
Vcc
311
ND311A
GND
313
315
Vgs
ND312
C311
312
301A
302
DTL301
DSL311
305
WSCN 2

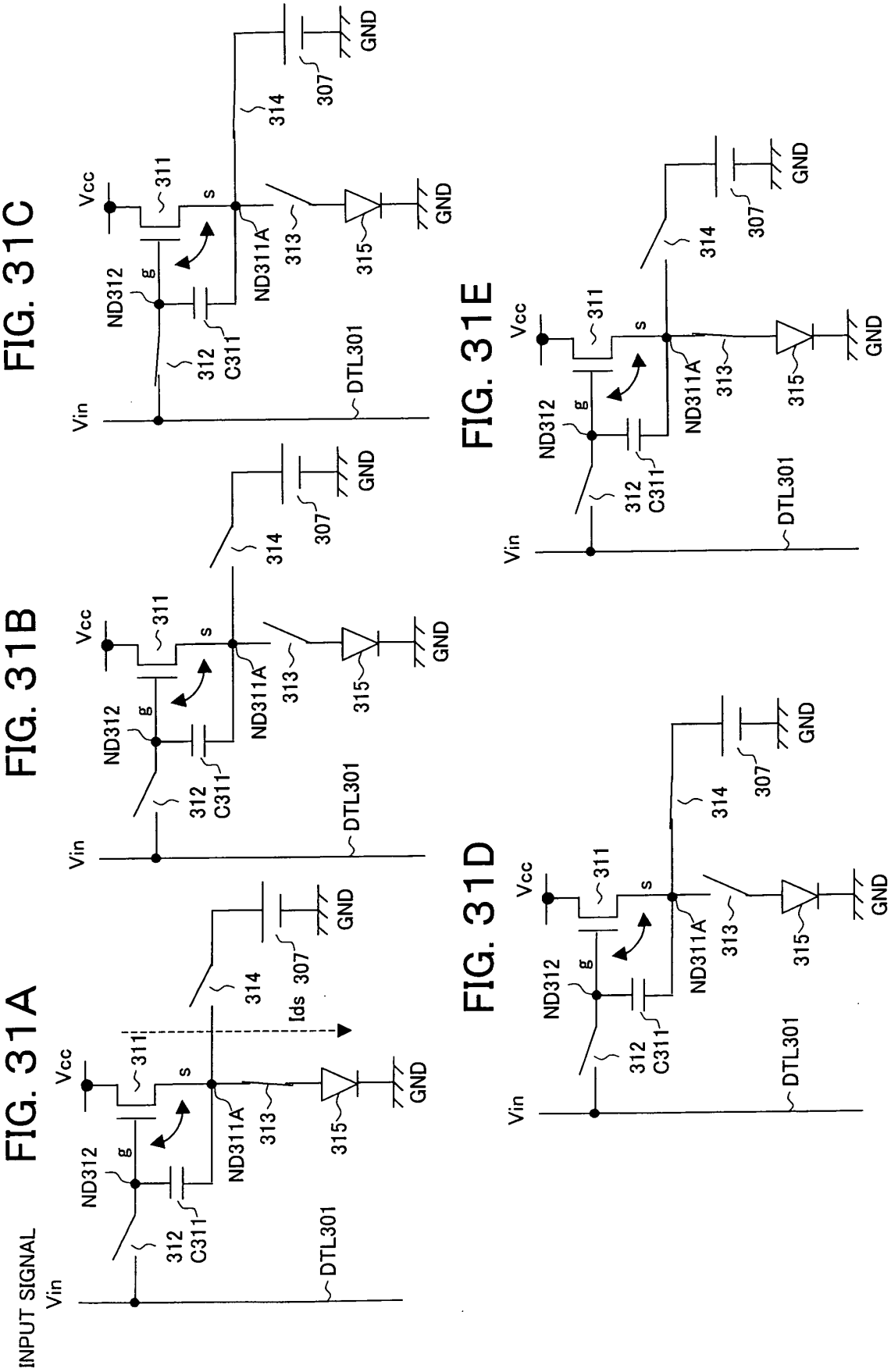

FIG. 31A

FIG. 31B

FIG. 31C

FIG. 31D

FIG. 31E

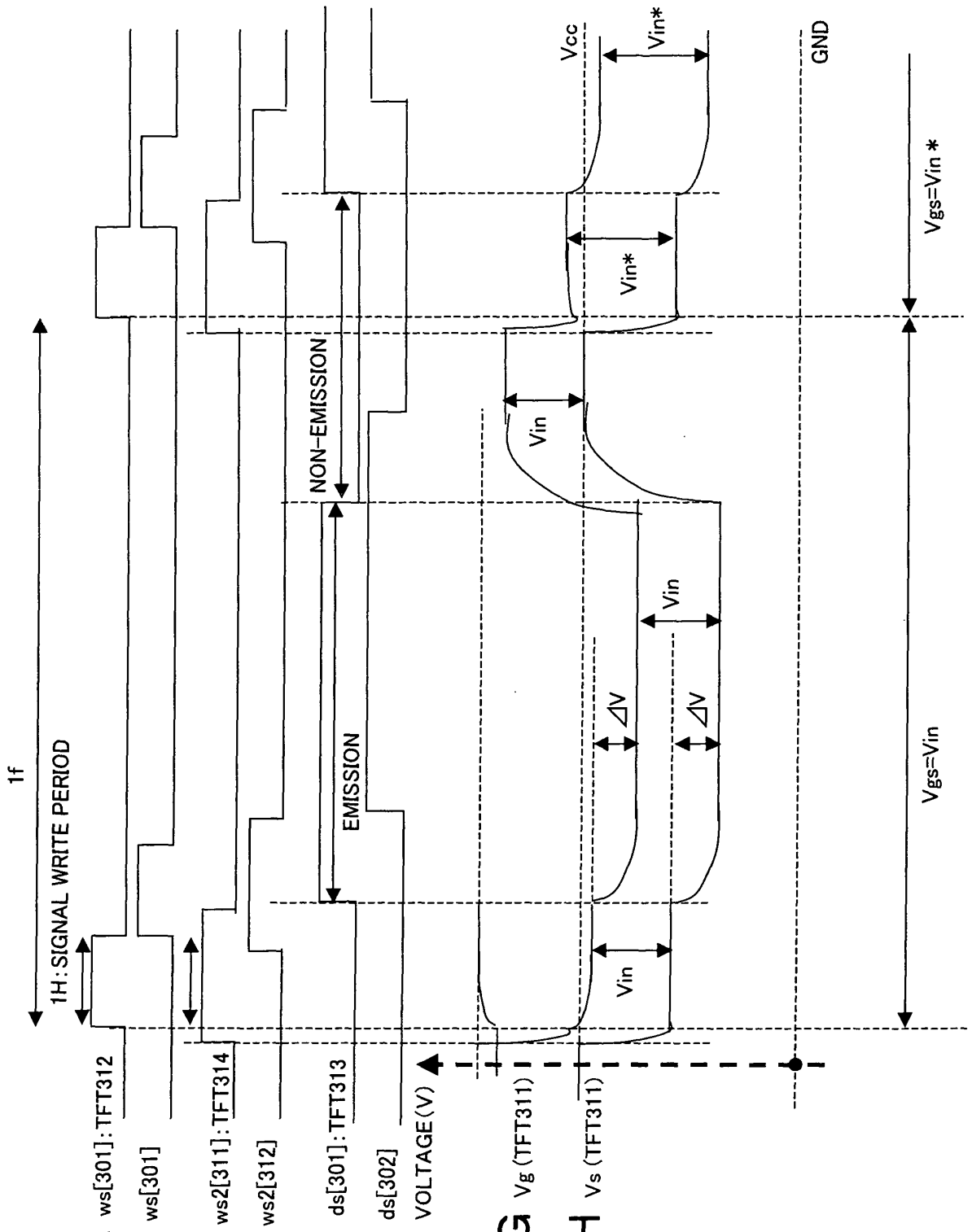
1f
1H: SIGNAL WRITE PERIOD
NON-EMISSION
EMISSION
Vcc
GND
Vin*
Vin
ΔV
Vgs=Vin *
Vgs=Vin
FIG. 32A ws[301]: TFT312
FIG. 32B ws[301]
FIG. 32C ws2[311]: TFT314
FIG. 32D ws2[312]
FIG. 32E ds[301]: TFT313
FIG. 32F ds[302]
VOLTAGE(V)
FIG. 32G Vg (TFT311)
FIG. 32H Vs (TFT311)

FIG. 33

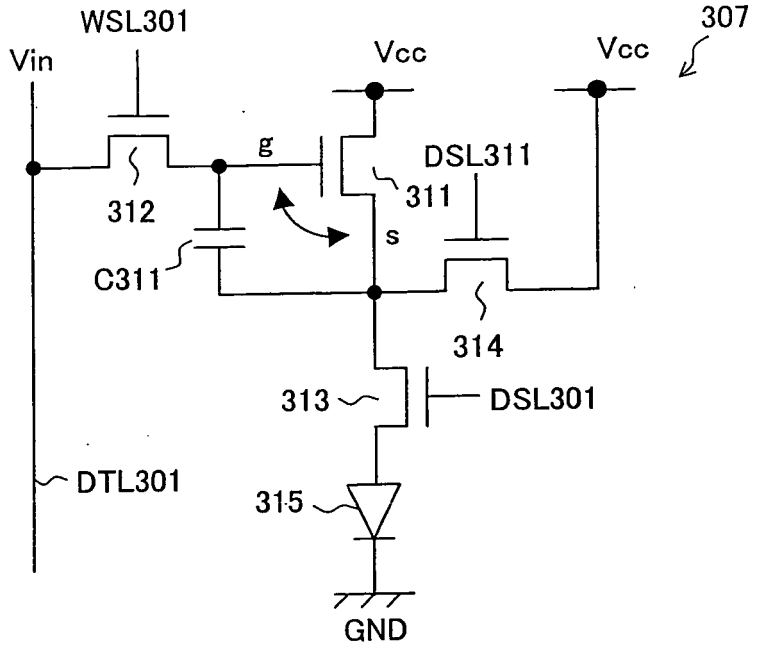
WSL301
Vin
Vcc
Vcc
307
g
DSL311
311
312
s
C311
314
313
DSL301
DTL301
315
GND

FIG. 34

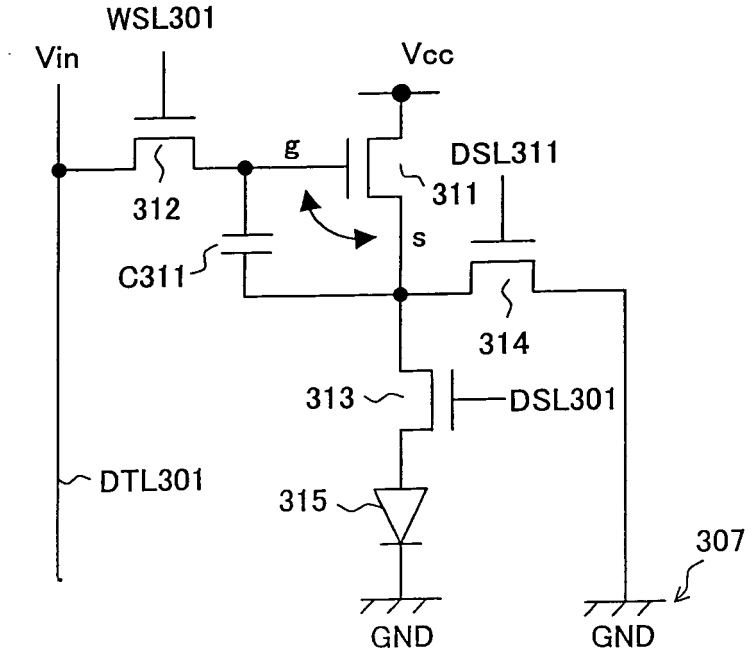
WSL301
Vin
Vcc
g
DSL311
311
312
s
C311
314
313
DSL301
DTL301
315
307
GND
GND

FIG. 35

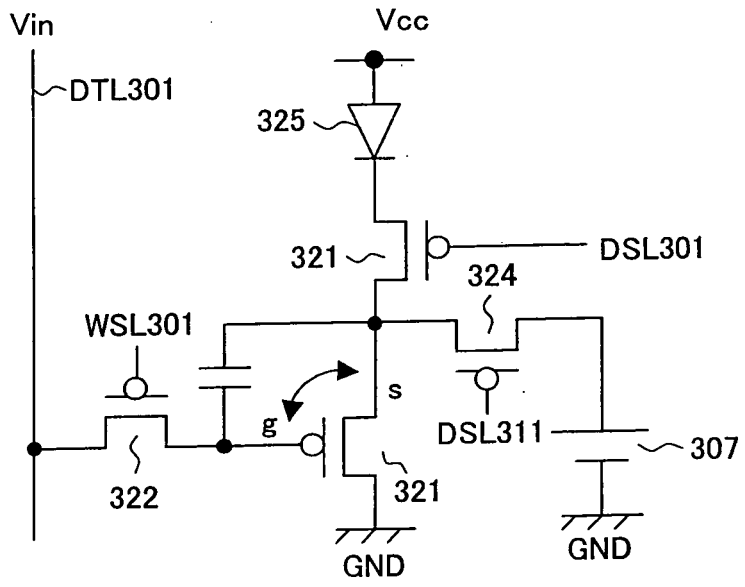
Vin
Vcc
DTL301
325
321
DSL301
324
WSL301
s
g
DSL311
307
322
321
GND
GND

FIG. 36

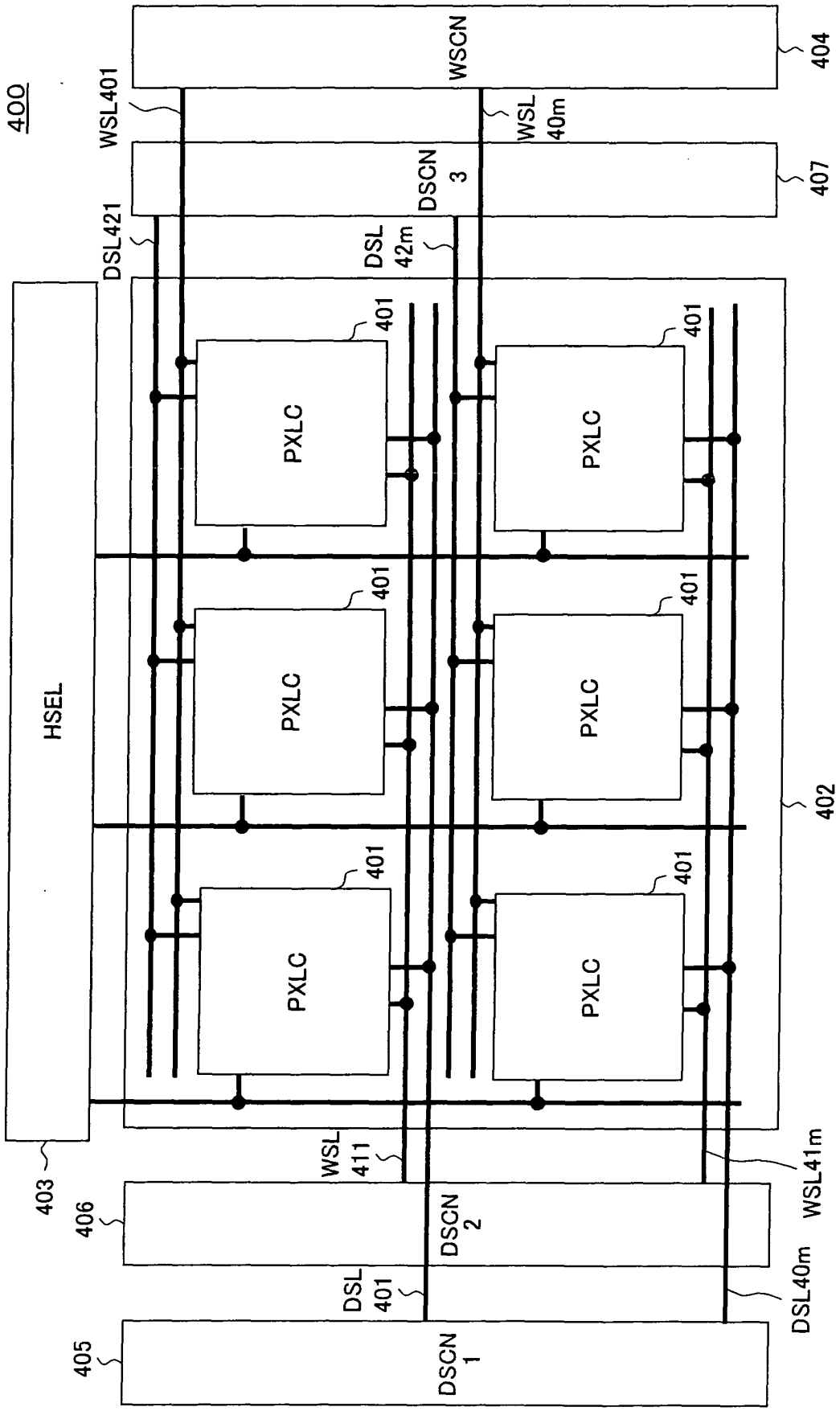
400
WSL401
DSL421
HSEL
403
WSCN
404
WSL
40m
DSCN
3
407
DSL
42m
401
PXLC
402
WSL
411
406
DSCN
2
DSL
401
405
DSCN
1
WSL41m
DSL40m

FIG. 37

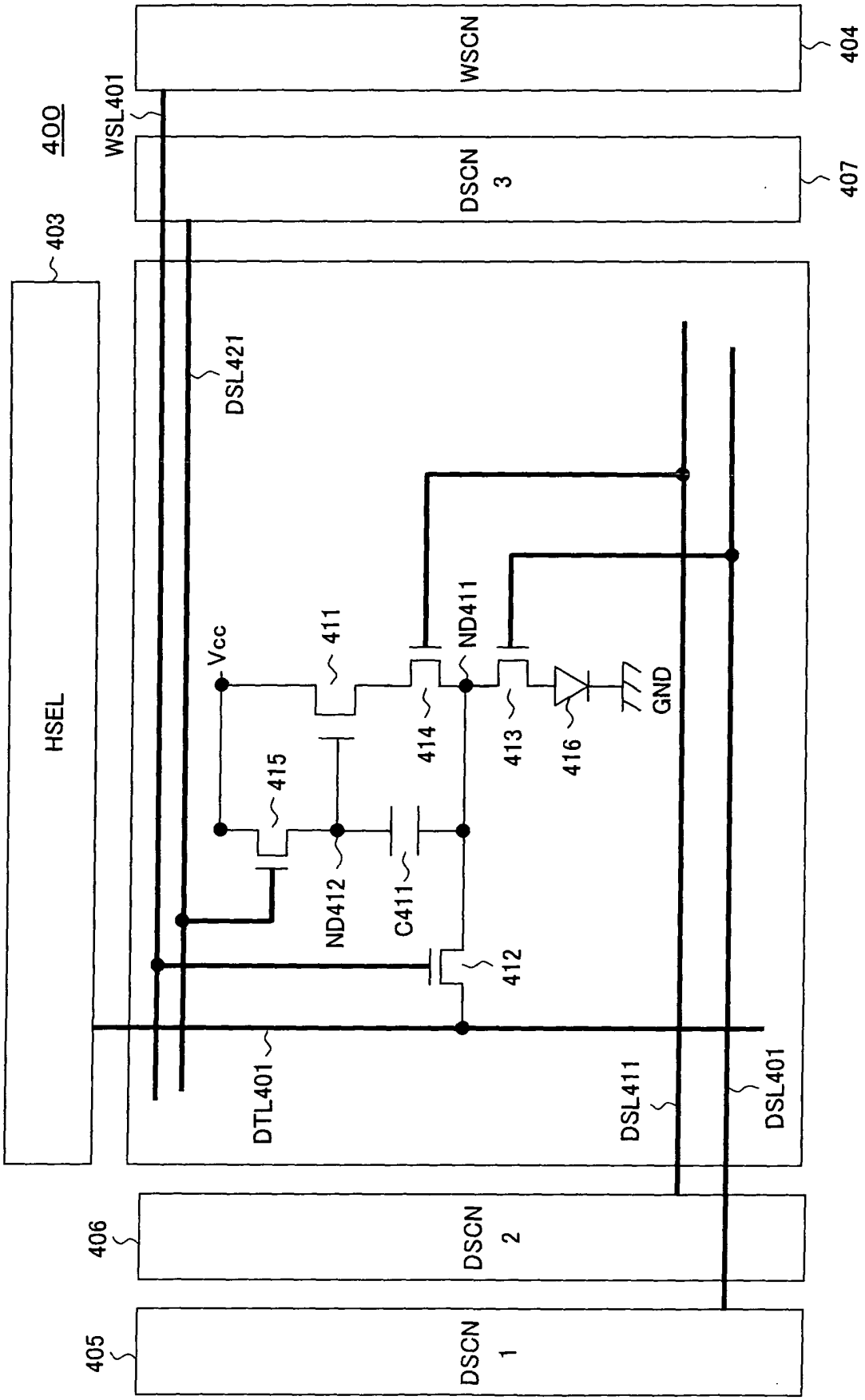
400
WSL401
WSCN
404
DSCN 3
407
403
HSEL
DSL421
Vcc
411
ND411
414
413
416
GND
415
ND412
C411
412
DTL401
DSL411
DSL401
406
DSCN 2
405
DSCN 1

FIG. 38A

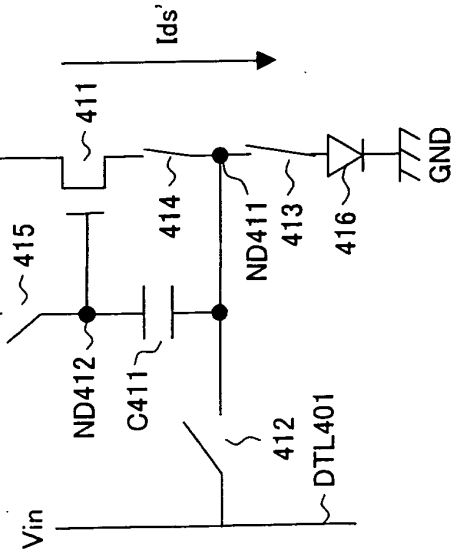

FIG. 38B

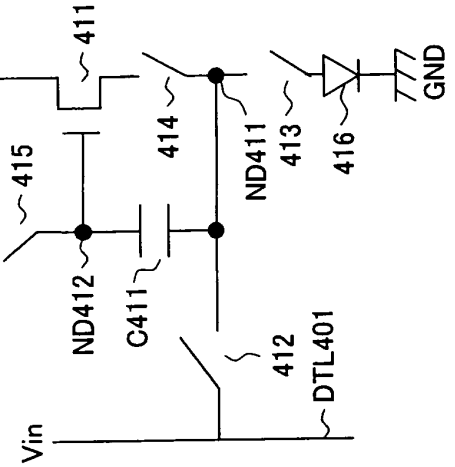

FIG. 38C

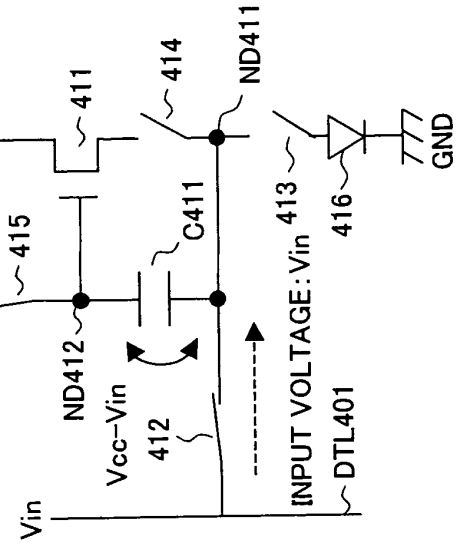

FIG. 38D

FIG. 38E

FIG. 38F

FIG. 39

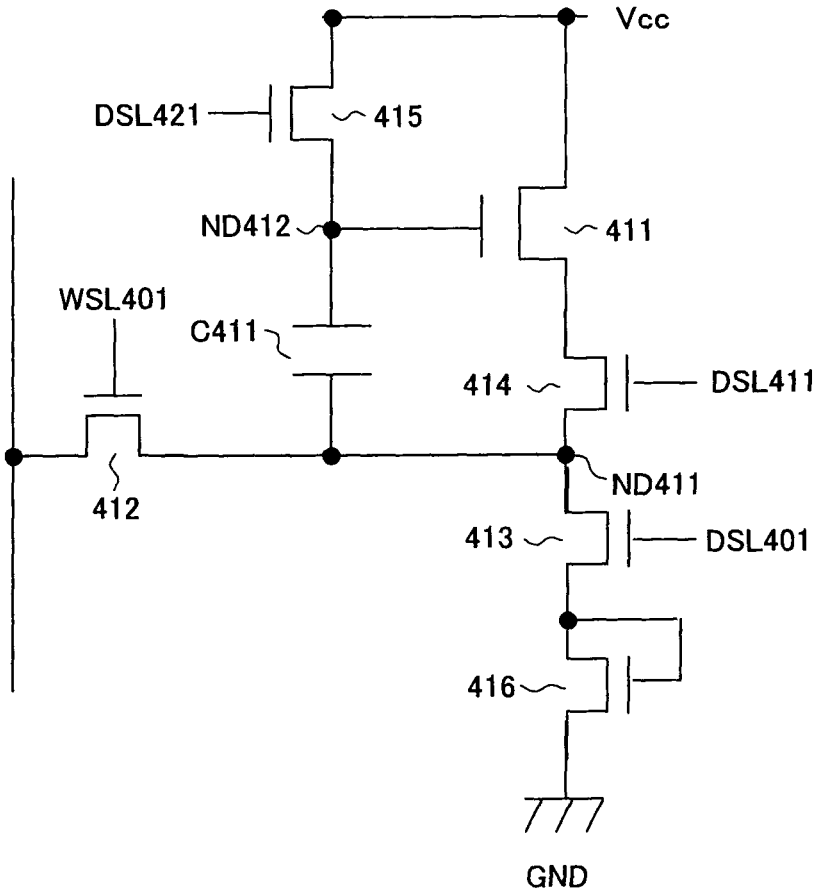
Vcc
DSL421
415
ND412
411
WSL401
C411
414
DSL411
412
ND411
413
DSL401
416
GND

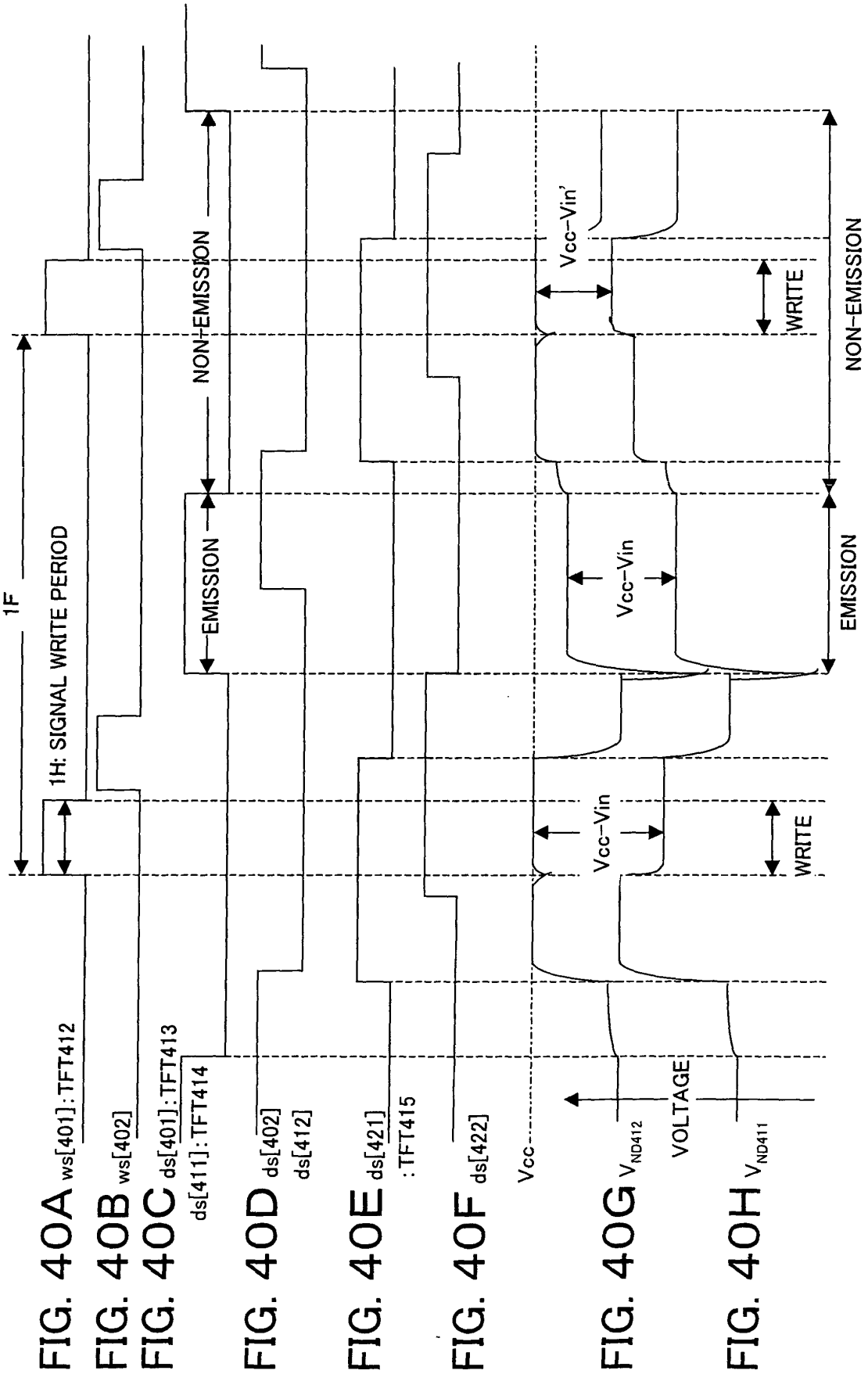
1F
1H: SIGNAL WRITE PERIOD
NON-EMISSION
EMISSION
Vcc−Vin'
Vcc−Vin
Vcc−Vin
WRITE
WRITE
NON-EMISSION
EMISSION
FIG. 40A ws[401]:TFT412
FIG. 40B ws[402]
FIG. 40C ds[401]:TFT413
ds[411]:TFT414
FIG. 40D ds[402]
ds[412]
FIG. 40E ds[421]
:TFT415
FIG. 40F ds[422]
Vcc
FIG. 40G VND412
VOLTAGE
FIG. 40H VND411

LIST OF REFERENCES

100... display device

101... pixel circuit (PXLC)

102... pixel array portion

103... horizontal selector (HSEL)

104... write scanner (WSCN)

105... drive scanner (DSCN)

DTL101 to DTL10n... data line

WSL101 to WSL10m... scanning line

DSL101 to DSL10m... drive line

111 to 113... TFT

114... light emitting element

ND111, ND112... node

200, 200A... display device

201, 201A... pixel circuit (PXLC)

202, 202A... pixel array portion

203... horizontal selector (HSEL)

204... write scanner (WSCN)

205... drive scanner (DSCN)

DTL201 to DTL210n... data line

WSL201 to WSL20m... scanning line

DSL201 to DSL20m... drive line

211 to 213... TFT

214... light emitting element

ND211, ND211A, ND212... node

300, 300A... display device

301, 301A... pixel circuit (PXLC)

302, 302A... pixel array portion

303... horizontal selector (HSEL)

304, 305... write scanner (WSCN)

306... drive scanner (DSCN)

DTL301 to DTL30n... data line

WSL301 to WSL30m, WSL311 to WSL31m... scanning line

DSL301 to DSL30m... drive line

311 to 314... TFT

ND311, ND311A, ND312... node

400... display device, 401... pixel circuit (PXLC)

402... pixel array portion

403... horizontal selector (HSEL)

404... write scanner (WSCN)

405 to 407... drive scanner (DSCN)

DTL401 to DTL40n... data line

WSL401 to WSL40m, DSL401 to DSL40m, DSL411 to DSL41m,

DSL421 to DSL42m... drive line

411 to 415... TFT

416... light emitting element

REFERENCES CITED IN THE DESCRIPTION

This list of references cited by the applicant is for the reader's convenience only. It does not form part of the European patent document. Even though great care has been taken in compiling the references, errors or omissions cannot be excluded and the EPO disclaims all liability in this regard.

Patent documents cited in the description

- US 5684365 A **[0009]**
- JP 8234683 A **[0009]**
- US 2002195968 A **[0040]**

专利名称(译)	像素电路，显示单元和像素电路驱动方法		
公开(公告)号	EP1628283B1	公开(公告)日	2017-10-04
申请号	EP2004734390	申请日	2004-05-21
[标]申请(专利权)人(译)	索尼公司		
申请(专利权)人(译)	索尼公司		
当前申请(专利权)人(译)	索尼公司		
发明人	UCHINO, KATSUHIDE SONY CORPORATION YAMASHITA, JUNICHI SONY CORPORATION YAMAMOTO, TETSURO SONY CORPORATION		
IPC分类号	G09G3/30 G09G3/20 H01L51/50 H01L21/8234 H01L27/06 H01L27/088 H01L29/786 H03K17/687 H05B33/14		
CPC分类号	G09G3/3233 G09G2300/043 G09G2300/0809 G09G2300/0819 G09G2300/0842 G09G2300/0861 G09G2310/0256 G09G2320/0233 G09G2320/043 G09G3/30 G09G3/3258 G09G3/3426 G09G3/36 G09G3/3648 G09G2320/045 H05B45/60		
代理机构(译)	WITTE，WELLER＆PARTNER专利律师MBB		
优先权	2003146758 2003-05-23 JP		
其他公开文献	EP1628283A1 EP1628283A4		
外部链接	Espacenet		

摘要(译)
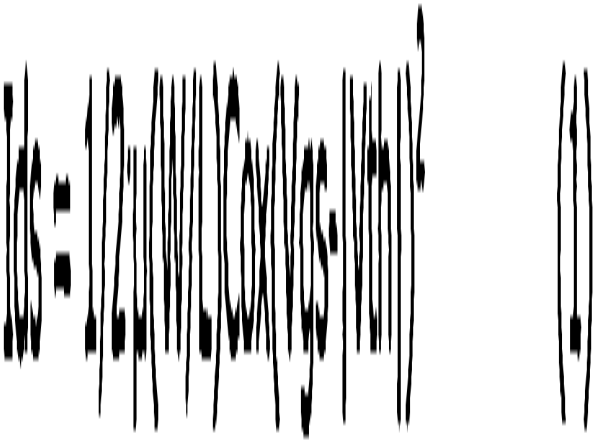
一种像素电路，显示装置和驱动像素电路的方法，即使随着发光元件的电流 - 电压特性的改变，也能够在没有亮度劣化的情况下实现源极跟随器输出，从而实现源极跟随器电路。 n沟道晶体管，并且能够在使用电流阳极 - 阴极电极的同时使用n沟道晶体管作为EL驱动晶体管，其中作为驱动晶体管的TFT 111的源极连接到发光元件114的阳极，漏极连接到电源电位VCC，电容器C111连接在TFT 111的栅极和源极之间，并且TFT 111的源极电位通过作为开关晶体管的TFT 113连接到固定电位。